National Cholesterol Education Program

Adult Treatment Panel III Report

2001

ATP III Outline

Acknowledgments ..... **ix**
National Cholesterol Education Program Expert Panel on Detection, Evaluation, and Treatment of High Blood Cholesterol in Adults (Adult Treatment Panel III) ix
Executive Committee Advisor and Reviewers ix
National Cholesterol Education Program Coordinating Committee ix

I. Background and Introduction **I–1**
1. Development of an evidence-based report I–1
2. Features of ATP III similar to those of ATP I and II I–2
3. New features of ATP III I–3
4. Relation of ATP III to NCEP's public health approach I–4
5. Relation of ATP III to other clinical guidelines I–5

II. Rationale for Intervention **II–1**
1. Basic description of lipids and lipoproteins II–1
2. LDL cholesterol as the primary target of therapy II–1
   a. Serum LDL cholesterol as a major cause of CHD II–2
   b. Serum LDL cholesterol as target of therapy II–4
   c. Categories and classification of total cholesterol and LDL cholesterol II–7
3. Other lipid risk factors II–8
   a. Triglycerides II–8
      1) Elevated serum triglycerides (and triglyceride-rich lipoproteins) as a risk factor II–8
      2) Lipoprotein remnants as atherogenic lipoproteins II–8
      3) VLDL cholesterol as a marker for remnant lipoproteins II–9
      4) Causes of elevated serum triglyceride II–9
      5) Categories of serum triglycerides II–9
      6) Elevated serum triglycerides and triglyceride-rich lipoproteins as targets of therapy II–10
   b. Non-HDL cholesterol II–11
      1) Non-HDL cholesterol as a risk factor II–11
      2) Non-HDL cholesterol as a secondary target of therapy II–12
   c. High density lipoproteins (HDL) II–13
      1) Low HDL cholesterol as an independent risk factor for CHD II–13
      2) Causes of low HDL cholesterol II–14
      3) Classification of serum HDL cholesterol II–15
      4) Low HDL cholesterol as a potential target of therapy II–16
   d. Atherogenic dyslipidemia II–16
      1) Atherogenic dyslipidemia as a "risk factor" II–16
      2) Atherogenic dyslipidemia as a target of therapy II–17
4. Nonlipid risk factors II–22
   a. Modifiable risk factors II–23
      1) Hypertension II–23

2) Cigarette smoking II–24
3) Diabetes II–24
4) Overweight/obesity II–25
5) Physical inactivity II–26
6) Atherogenic diet II–27
b. Nonmodifiable risk factors II–28
1) Age II–28
2) Male sex II–28
3) Family history of premature CHD II–29
5. Emerging risk factors II–30
a. Emerging lipid risk factors II–31
1) Triglycerides II–31
2) Lipoprotein remnants II–31
3) Lipoprotein (a) II–32
4) Small LDL particles II–33
5) HDL subspecies II–33
6) Apolipoproteins II–33
a) Apolipoprotein B II–33
b) Apolipoprotein AI II–34
7) Total cholesterol/HDL-cholesterol ratio II–34
b. Emerging nonlipid risk factors II–34
1) Homocysteine II–34
2) Thrombogenic/hemostatic factors II–35
3) Inflammatory markers II–36
4) Impaired fasting glucose II–36
c. Subclinical atherosclerotic disease II–37
1) Ankle-brachial blood pressure index (ABI) II–37
2) Tests for myocardial ischemia II–37
3) Tests for atherosclerotic plaque burden II–38
a) Carotid intimal medial thickening II–38
b) Coronary calcium II–38
6. Metabolic syndrome II–39
a. Metabolic syndrome as multiple, interrelated factors that raise risk II–39
b. Diagnosis of metabolic syndrome II–40
c. Metabolic syndrome as a target of therapy II–41
7. Primary prevention: persons without established CHD II–42
a. Scope of primary prevention II–42
b. Clinical strategy in primary prevention effort II–42
c. Concepts of short-term and long-term prevention II–43
d. Role of LDL lowering in short-term and long-term primary prevention II–43
e. Risk assessment in primary prevention II–44
f. Primary prevention with lifestyle changes II–46
1) Basis for lifestyle recommendations for primary prevention II–46
2) Dietary clinical trials of cholesterol lowering II–46
3) Linkage of public health approach and clinical approach in primary prevention II–46
g. Effectiveness of LDL-lowering drugs in primary prevention II–46

h. Selection of persons for short-term risk reduction with LDL-lowering drugs II–47
i. Selection of older persons for short-term, primary prevention II–48
j. Selection of persons for long-term primary prevention in the clinical setting II–49
k. LDL goals in primary prevention II–54
8. Secondary prevention: persons with CHD II–56
a. Secondary prevention of recurrent CHD II–56
b. Effects of lipid-lowering therapy on stroke II–62
9. Total mortality considerations and therapeutic safety II–62
10. Magnitude of reduction in CHD risk II–65
11. CHD as a risk indicator II–66
12. Concept of CHD risk equivalents II–67
a. Other forms of clinical atherosclerotic disease II–67
1) Peripheral arterial disease (PAD) II–67
2) Carotid artery disease II–70
3) Abdominal aortic aneurysm (AAA) II–73
b. Diabetes as a CHD risk equivalent II–74
c. High-risk persons with multiple risk factors II–78
13. Models for clinical intervention: role of multidisciplinary team II–79
14. Cost-effectiveness issues II–80
a. Purpose of cost-effectiveness analysis of LDL-lowering therapy II–80
b. Approaches to estimating cost-effectiveness of cholesterol-lowering therapies II–81
c. Criteria for cost-effectiveness therapies II–84
d. Cost effectiveness analysis for LDL lowering for secondary prevention (persons with established CHD) II–84
e. Cost effectiveness analysis in persons with CHD risk equivalents II–85
f. Cost effectiveness of primary prevention II–85
1) Cost effectiveness of dietary therapy for primary prevention II–85
2) Cost effectiveness of drug therapy for short-term primary prevention II–85
3) Cost-effectiveness for primary prevention based on WOSCOPS results II–86
4) Cost effectiveness of primary prevention based on the AFCAPS/TexCAPS trial II–86
5) Cost-effectiveness in long-term primary prevention II–87
g. Summary II–87

III. Detection and Evaluation III–1
1. Identification of risk categories for setting of LDL-cholesterol goals III–1
a. Identification of persons with CHD and CHD risk equivalent III–1
b. Risk assessment in persons without CHD or CHD risk equivalents (starting with risk factor counting) III–2
1) Identification of persons with multiple (2+) risk factors III–3
2) Calculation of 10-year CHD risk III–3
2. Determination and classification of LDL cholesterol III–8
a. Who should be tested for cholesterol and lipoproteins? III–8
b. Procedures of measurement III–9
c. Classification of lipid and lipoprotein levels III–10
d. Secondary dyslipidemias (see Section VII) III–10

3. Atherogenic dyslipidemia and the metabolic syndrome III–11
a. Atherogenic dyslipidemia and classification of serum triglycerides III–11
b. Diagnosis of the metabolic syndrome III–11
4. Role of emerging risk factors in risk assessment III–11

IV. General Approach to Treatment—Goals and Thresholds IV–1
1. Therapeutic goals for LDL cholesterol IV–1
2. Management of LDL Cholesterol IV–2
a. CHD and CHD risk equivalents IV–2
1) Baseline LDL cholesterol ≥130 mg/dL IV–3
2) Baseline LDL cholesterol 100–129 mg/dL IV–3
3) Baseline LDL cholesterol <100 mg/dL IV–3
b. Multiple (2+) risk factors IV–4
1) Multiple risk factors, 10-year risk >20 percent IV–4
2) Multiple risk factors, 10-year risk 10–20 percent IV–4
3) Multiple risk factors, 10-year risk <10 percent IV–4
c. Zero to one risk factor IV–5
d. Management of LDL cholesterol when risk assessment begins with Framingham scoring (Table IV.2–4) IV–5
e. Recommendations for persons whose LDL cholesterol levels are below goal IV–6
f. LDL-lowering therapy in older persons IV–7
3. Management of atherogenic dyslipidemia and the metabolic syndrome IV–7
a. Atherogenic dyslipidemia IV–7
b. Metabolic syndrome IV–7

V. Adopting Healthful Lifestyle Habits to Lower LDL Cholesterol and Reduce CHD Risk V–1
1. Population approach: promoting a base of healthy life habits V–1
2. General approach to therapeutic lifestyle changes (TLC) V–5
3. Components of the TLC diet V–13
a. Major nutrient components V–13
1) Saturated fatty acids V–13
2) Trans fatty acid V–15
3) Dietary cholesterol V–15
4) Monounsaturated fatty acids V–16
5) Polyunsaturated fatty acids V–17
6) Total fat V–18
7) Carbohydrate V–19
8) Protein V–20
b. Additional dietary options for LDL lowering V–20
1) Increasing viscous fiber in the diet V–20
2) Plant stanols/sterols V–21
3) Soy protein V–22
c. Other dietary factors that may reduce baseline risk for CHD V–22
1) n-3 (omega-3) polyunsaturated fatty acids V–23
2) Vitamins/antioxidants V–24
a) Folic acid and vitamins B6 and B12 ..... V–24

b) Antioxidants V–25
3) Moderate intakes of alcohol V–26
4) Dietary sodium, potassium, and calcium V–27
5) Herbal or botanical dietary supplements V–28
6) High protein, high total fat and saturated fat weight loss regimens V–28
4. Management of the metabolic syndrome through life habit changes V–29
a. Weight control V–29
b. Increased regular physical activity V–30
5. Practical approach to life habit changes V–30
a. Role of the physician V–30
1) Visit 1: Risk assessment, diet assessment, and initiation of therapeutic lifestyle change V–31
2) Visit 2: Intensifying the TLC diet for LDL cholesterol lowering V–31
3) Visit 3: Decision about drug therapy; initiating management of the metabolic syndrome V–32
4) Visit N: Long-term follow-up and monitoring adherence to therapeutic lifestyle changes (TLC) V–34
b. Role of nurses, physician assistants, and pharmacists V–34
c. Specific role of registered dietitians and other qualified nutrition professionals V–35
1) Role of the nutrition professional in LDL-lowering therapy V–35
a) First: dietary assessment V–36
b) Dietary guidance on adopting the TLC Diet V–36
c) Specific foods and preparation techniques V–37
d) Recommendations by food group V–38
e) Other eating tips V–40
2) Role of the dietitian in management of the metabolic syndrome V–41
6. Improving patient adherence to life habit changes V–41

Diet Appendix A
Sample Dietary Assessment Questionaire (Part 1) MEDFICTS* A–1
Sample Dietary Assessment Questionaire (Part 2) MEDFICTS* A–2

Diet Appendix B
TLC Sample Menu—Traditional American Cuisine, Male, 25–49 Years B–1
TLC Sample Menu—Traditional American Cuisine, Female, 25–49 Years B–2
TLC Sample Menu—Lacto Ovo Vegetarian Cuisine, Male, 25–49 Years B–3
TLC Sample Menu—Lacto Ovo Vegetarian Cuisine, Female, 25–49 Years B–4
TLC Sample Menu—Southern Cuisine, Male, 25–49 Years B–5
TLC Sample Menu—Southern Cuisine, Female, 25–49 Years B–6
TLC Sample Menu—Asian Cuisine, Male, 25–49 Years B–7
TLC Sample Menu—Asian Cuisine, Female, 25–49 Years B–8
TLC Sample Menu—Mexican-American Cuisine, Male, 25–49 Years B–9
TLC Sample Menu—Mexican-American Cuisine, Female, 25–49 Years B–10

Diet Appendix C
Saturated Fat, Total Fat, Cholesterol, and Omega-3 Content of Meat, Fish, and Poultry in 3-Ounce Portions Cooked Without Added Fat C–1

VI. Drug Therapy VI–1
1. Thresholds and goals for drug treatment VI–1
   a. Drug therapy to achieve treatment goals: overview VI–1
   b. Cholesterol management in persons with CHD or CHD risk equivalents VI–3
      1) Baseline LDL cholesterol ≥130 mg/dL VI–3
      2) On-treatment LDL cholesterol 100–129 mg/dL VI–3
      3) Baseline LDL cholesterol 100–129 mg/dL VI–4
      4) Baseline LDL cholesterol <100 mg/dL VI–5
      5) Initiating cholesterol-lowering drugs in hospitalized patients VI–5
      6) Special considerations for drug therapy in CHD patients VI–6
   c. General principles of primary prevention with drug therapy VI–7
   d. Drug considerations for persons with multiple (2+) risk factors VI–7
      1) 10-year risk >20 percent VI–7
      2) 10-year risk 10–20 percent VI–8
      3) 10-year risk <10 percent VI–8
   e. Drug considerations for persons with 0–1 risk factor, 10-year risk <10 percent VI–8
2. Available drug therapies VI–8
   a. Overview and general approach VI–8
   b. Major drugs VI–9
      1) HMG CoA reductase inhibitors (statins)—lovastatin, pravastatin, simvastatin, fluvastatin, atorvastatin VI–9
      2) Bile acid sequestrants—cholestyramine, colestipol, colesevelam VI–13
      3) Nicotinic acid VI–15
      4) Fibric acid derivatives (fibrates): gemfibrozil, fenofibrate, clofibrate VI–18
   c. Other drugs VI–22
   d. n-3 fatty acids VI–22
   e. Hormone replacement therapy (HRT) VI–23
      1) Selective estrogen receptor modulators (SERM)—Raloxifene VI–24
   f. Miscellaneous drugs and therapeutic approaches VI–25
      1) Investigational drugs VI–25
      2) Other approaches VI–25
3. Selection of drugs for elevated LDL cholesterol VI–25
   a. Practical advice on combined drug therapy VI–27
      1) Statin—bile acid sequestrant combination VI–27
      2) Statin—fibrate combination therapy VI–28
      3) Statin—nicotinic acid combination therapy VI–30
      4) Fibrate—nicotinic acid combination therapy VI–30
4. Initiation, monitoring and followup of drug treatment VI–30
   a. Initiation of LDL-lowering drug therapy VI–30
   b. Baseline measurements VI–31
   c. Interval of follow up VI–32
   d. Followup treatment decisions VI–33

VII. Management of Specific Dyslipidemias VII–1
1. Very high LDL cholesterol VII–1
   a. Familial hypercholesterolemia (FH) VII–3
   b. Familial defective apolipoprotein B-100 (FDB) VII–4

c. Polygenic hypercholesterolemia VII–4
2. Elevated triglycerides VII–4
a. Classification, causation, and clinical significance VII–4
1) Classification of serum triglycerides VII–4
2) Causes of elevated triglycerides VII–5
3) Relation of elevated triglycerides to CHD and other conditions VII–7
b. Therapeutic considerations for persons with elevated triglycerides VII–9
1) Non-HDL cholesterol: secondary target for persons with elevated triglycerides VII–9
2) Changes in life habits are primary therapy for elevated triglycerides VII–9
3) Special treatment considerations for different triglyceride categories (Table VII.2–4) VII–11
3. Low HDL cholesterol (without hypertriglyceridemia) VII–13
a. Definition, causes and relationship to CHD VII–13
b. Therapeutic considerations in persons with low HDL cholesterol VII–16
1) Clinical trial evidence VII–16
2) Recommendations for low HDL cholesterol in persons with CHD or CHD risk equivalents, 10-year risk >20 percent VII–17
3) Considerations for persons with low HDL cholesterol in other risk categories, 10-year risk ≤20 percent VII–17
4. Diabetic dyslipidemia VII–18
a. Definition of diabetic dyslipidemia VII–18
b. Role of elevated LDL and other risk factors in causation of CHD in persons with diabetes (Table VII.4–1) VII–19
c. Therapeutic recommendations for lipoprotein disorders in persons with diabetes VII–21
1) Special therapeutic considerations according to LDL-cholesterol level (Table VII.4–2) VII–21
2) Comments on specific drug classes used in management of lipid disorders in persons with diabetes VII–23
5. Other secondary dyslipidemias VII–24
6. Persons with high blood cholesterol and concomitant hypertension VII–25
a. Therapeutic considerations VII–25
b. Effects of antihypertensive agents on serum lipids VII–26
c. Selection of antihypertensive therapy VII–26
d. Selection of lipid-lowering therapy VII–27
e. Compliance with therapy VII–27

VIII. Special Considerations for Different Population Groups VIII–1
1. Middle-aged men VIII–1
2. Women VIII–2
3. Older persons (men ≥65 years; women ≥75 years) VIII–5
4. Younger adults (men 20–35 years; women 20–45 years) VIII–7
5. Racial and ethnic groups VIII–8
a. African Americans VIII–8
b. Hispanic Americans VIII–11
c. Native Americans (American Indians) VIII–12

d. Asian and Pacific Islanders VIII–13
e. South Asians VIII–13

IX. Adherence IX–1
1. Recurrent themes and perspectives IX–2
2. Interventions to improve adherence IX–3
a. Interventions focused on the patient IX–3
1) Simplify medication regimens IX–3
2) Provide explicit patient instruction and use good counseling techniques to teach the patient how to follow the prescribed treatment IX–4
3) Encourage the use of prompts to help persons remember treatment regimens IX–4
4) Use systems to reinforce adherence and maintain contact with the patient IX–5
5) Encourage the support of family and friends IX–5
6) Reinforce and reward adherence IX–5
7) Increase patient visits for persons unable to achieve treatment goal IX–6
8) Increase the convenience and access to care IX–6
9) Involve patients in their care through self-monitoring IX–6
b. Interventions focused on the physician and medical office IX–6
1) Teach physicians to implement lipid treatment guidelines IX–6
2) Use reminders to prompt physicians to attend to lipid management IX–7
3) Identify a patient advocate in the office to help deliver or prompt care IX–7
4) Use patients to prompt preventive care IX–7
5) Develop a standardized treatment plan to structure care IX–7
6) Use feedback from past performance to foster change in future care IX–8
7) Remind patients of appointments and follow-up missed appointments IX–8
c. Interventions focused on the health delivery system IX–8
1) Provide lipid management through a lipid clinic IX–8
2) Utilize case management by nurses IX–9
3) Deploy telemedicine IX–9
4) Utilize the collaborative care of pharmacists IX–10
5) Execute critical care pathways in hospitals IX–10

List of Studies Studies–1

ATP III References Ref–1

Acknowledgments

National Cholesterol Education Program Expert Panel on Detection, Evaluation, and Treatment of High Blood Cholesterol in Adults (Adult Treatment Panel III)

Members: Scott M. Grundy, M.D., Ph.D. (Chair of the panel), Diane Becker, R.N., M.P.H., Sc.D., Luther T. Clark, M.D., Richard S. Cooper, M.D., Margo A. Denke, M.D., Wm. James Howard, M.D., Donald B. Hunninghake, M.D., D. Roger Illingworth, M.D., Ph.D., Russell V. Luepker, M.D., M.S., Patrick McBride, M.D., M.P.H., James M. McKenney, Pharm.D., Richard C. Pasternak, M.D., F.A.C.C., Neil J. Stone, M.D., Linda Van Horn, Ph.D., R.D.

Ex-officio Members: H. Bryan Brewer, Jr., M.D., James I. Cleeman, M.D. (Executive Director of the panel), Nancy D. Ernst, Ph.D., R.D., David Gordon, M.D., Ph.D., Daniel Levy, M.D., Basil Rifkind, M.D., Jacques E. Rossouw, M.D., Peter Savage, M.D.

Consultants: Steven M. Haffner, M.D., David G. Orloff, M.D., Michael A. Proschan, Ph.D., J. Sanford Schwartz, M.D., Christopher T. Sempos, Ph.D.

Staff: Susan T. Shero, R.N., M.S., Elaine Z. Murray, Susan A. Keller, B.S.N., M.S.

Manuscript Preparation: Angela J. Jehle

Executive Committee Advisor and Reviewers

Executive Committee Advisor to the Panel: Stephen Havas, M.D., M.P.H., M.S.

Reviewers: Eugene Braunwald, M.D., W. Virgil Brown, M.D., Alan Chait, M.D., James E. Dalen, M.D., Valentin Fuster, M.D., Ph.D., Henry N. Ginsberg, M.D., Antonio M. Gotto, M.D., D.Phil., Ronald M. Krauss, M.D., John C. LaRosa, M.D., F.A.C.P., Thomas H. Lee, Jr., M.D., Linda Meyers, Ph.D., Michael Newman, M.D., Thomas Pearson, M.D., Ph.D., Daniel J. Rader, M.D., Frank M. Sacks, M.D., Ernst J. Schaefer, M.D., Sheldon G. Sheps, M.D., Lynn A. Smaha, M.D., Ph.D., Sidney C. Smith, Jr., M.D., Jeremiah Stamler, M.D., Daniel Steinberg, M.D., Ph.D., Nanette K. Wenger, M.D.

National Cholesterol Education Program Coordinating Committee

The Third Report of the Expert Panel on Detection, Evaluation, and Treatment of High Blood Cholesterol in Adults was approved by the National Cholesterol Education Program Coordinating Committee, which comprises the following organizational representatives:

Member Organizations. National Heart, Lung, and Blood Institute – Claude Lenfant, M.D., (Chair), James I. Cleeman, M.D. (Coordinator), American Academy of Family Physicians – Theodore G. Ganiats, M.D., American Academy of Insurance Medicine – Gary Graham, M.D., American Academy of Pediatrics – Ronald E. Kleinman, M.D, American Association of Occupational Health Nurses – Pamela Hixon, B.S.N., R.N., C.O.H.N-S, American College of Cardiology – Richard C. Pasternak, M.D., F.A.C.C., American College of Chest Physicians – Gerald T. Gau, M.D., American College of Nutrition – Harry Preuss, M.D., American College of

Obstetricians and Gynecologists – Thomas C. Peng, M.D., American College of Occupational and Environmental Medicine – Ruth Ann Jordan, M.D., American College of Preventive Medicine – Lewis H. Kuller, M.D., Dr.P.H., American Diabetes Association, Inc. – Alan J. Garber, M.D., Ph.D., American Dietetic Association – Linda Van Horn, Ph.D., R.D., American Heart Association – Scott M. Grundy, M.D., Ph.D., American Hospital Association – Sandra Cornett, R.N., Ph.D., American Medical Association – Yank D. Coble, Jr., M.D., American Nurses Association, American Osteopathic Association – Michael Clearfield, D.O., American Pharmaceutical Association – James M. McKenney, Pharm.D., American Public Health Association – Stephen Havas, M.D., M.P.H., M.S., American Red Cross – Donald Vardell, M.S., Association of Black Cardiologists – Karol Watson, M.D., Ph.D., Association of State and Territorial Health Officials – Joanne Mitten, M.H.E., Citizens for Public Action on Blood Pressure and Cholesterol, Inc. – Gerald J. Wilson, M.A., M.B.A., National Black Nurses Association, Inc. – Linda Burnes-Bolton, Dr.P.H., R.N., M.S.N., F.A.A.N., National Medical Association – Luther T. Clark, M.D., Society for Nutrition Education – Darlene Lansing, M.P.H., R.D., Society for Public Health Education – Donald O. Fedder, Dr.P.H., M.P.H.

Associate Member Organization. American Association of Office Nurses – Joyce Logan.

Federal Agencies. NHLBI Ad Hoc Committee on Minority Populations – Yvonne L. Bronner, Sc.D., R.D., L.D., Agency for Healthcare Research and Quality – Francis D. Chesley, Jr., M.D., Centers for Disease Control and Prevention – Wayne Giles, M.D., M.P.H., Coordinating Committee for the Community Demonstration Studies – Thomas M. Lasater, Ph.D., Department of Agriculture – Alanna Moshfegh, M.S., R.D., Department of Defense – Col. Robert Dana Bradshaw, M.D., M.P.H., Food and Drug Administration – Elizabeth Yetley, Ph.D., Health Resources and Services Administration – Celia Hayes, M.P.H., R.D., National Cancer Institute – Carolyn Clifford, Ph.D., National Center for Health Statistics – Clifford Johnson, M.P.H., Office of Disease Prevention and Health Promotion – Elizabeth Castro, Ph.D., Department of Veterans Affairs – Pamela Steele, M.D.

I. Background and Introduction

The Third Report of the Expert Panel on Detection, Evaluation, and Treatment of High Blood Cholesterol in Adults (Adult Treatment Panel III, or ATP III) presents the National Cholesterol Education Program's (NCEP's) updated recommendations for cholesterol testing and management. It is similar to Adult Treatment Panel II (ATP II) (National Cholesterol Education Program 1993; 1994) in general outline and fundamental approach to therapy. It focuses on the role of the clinical approach to prevention of coronary heart disease (CHD).* This report continues to identify low-density lipoprotein (LDL) as the primary target of cholesterol-lowering therapy. Since ATP II, a number of controlled clinical trials with newer cholesterol-lowering drugs have been reported. These trials demonstrated remarkable reductions in risk for CHD, in both primary and secondary prevention. Their results enrich the evidence base upon which the new guidelines are founded.

1. Development of an evidence-based report

The ATP III panel extensively analyzed the results of recent clinical trials whose findings strongly influenced the development of the new guidelines. The panel's major goals were to review the literature objectively and to document and display the scientific evidence for ATP III recommendations. Prior to the appointment of the ATP III panel, the NCEP Coordinating Committee developed a list of important issues for the panel's consideration. This list was presented to the panel, discussed, and modified appropriately. The literature pertaining to each defined issue was identified by the panel members and by a MEDLINE search. Panel members produced a series of issue papers that carefully reviewed the literature; these issue papers became the foundation for writing the first draft of the report. Modifications of drafts were made following review and discussion of additional evidence arising from the literature search. ATP III contains both evidence statements and specific recommendations based on these statements. Each evidence statement is qualified according to category of evidence (A–D) and strength of evidence (1–3), as follows:

Type of Evidence

Category of Type of Evidence	Description of Type of Evidence
A	Major randomized controlled clinical trials (RCTs)
B	Smaller RCTs and meta-analyses of other clinical trials
C	Observational and metabolic studies
D	Clinical experience

* *In ATP III, CHD is defined as symptomatic ischemic heart disease, including myocardial infarction, stable or unstable angina, demonstrated myocardial ischemia by noninvasive testing, and history of coronary artery procedures.*

Strength of Evidence

Category of Strength of Evidence	Description of Strength of Evidence
1	Very strong evidence
2	Moderately strong evidence
3	Strong trend

Empirical data provide the foundation for recommendations; but research in the cholesterol field, as in almost any other, generally has addressed large questions and has not necessarily provided answers to every specific question of clinical intervention. Thus, in the panel's view, the general evidence (including type and strength) often fails to carry a one-to-one correspondence with needed specific recommendations. Consequently, ATP III recommendations are based on the panel's best interpretation of the relation between empirical evidence and issues of clinical intervention. The recommendations are crafted in language that best links general evidence to specific issues; they are not qualified quantitatively according to category and strength of evidence, which is implicit in the language of the recommendation. Finally, for complex issues, several evidence statements or recommendations may be grouped together.

This evidence-based report should not be viewed as a standard of practice. Evidence derived from empirical data can lead to generalities for guiding practice, but such guidance need not hold for individual patients. Clinical judgment applied to individuals can always take precedence over general management principles. Recommendations of ATP III thus represent general guidance that can assist in shaping clinical decisions, but they should not override a clinician's considered judgment in the management of individuals.

The ATP III panel played four important roles in forging this evidence-based report. First, it systematically reviewed the literature and judged which reports provided relevant information. Second, it synthesized the existing literature into a series of evidence statements. This synthesis also required a judgment as to the category and strength of evidence. Third, the panel developed recommendations based on the evidence statements; these recommendations represent a consensus judgment about the clinical significance of each evidence statement. Lastly, the panel created an integrated set of recommendations and guidelines based on individual recommendations.

2. Features of ATP III similar to those of ATP I and II

ATP III represents an update of recommendations for clinical management of high blood cholesterol and related abnormalities. It is constructed on the foundation of previous reports, ATP I (Report of the National Cholesterol Education Program . . . 1988; Report of the Expert Panel . . . 1990) and ATP II (National Cholesterol Education Program 1993; 1994). The NCEP periodically produces ATP clinical updates as warranted by advances in the science of cholesterol management. Each report has a major thrust. ATP I outlined a strategy for primary prevention of CHD in persons with high LDL cholesterol (≥160 mg/dL) or in those with borderline-high LDL cholesterol (130–159 mg/dL) and multiple (2+) other risk factors. ATP II affirmed the importance of this approach and added a new feature: the intensive management of LDL cholesterol in persons with established CHD. For CHD patients, ATP II set a new, lower

LDL-cholesterol goal of ≤100 mg/dL. ATP III maintains continuity with ATP I and ATP II. Before considering the new constituents of ATP III, some of the important features shared with previous reports are shown in Table I.2–1.

Table I.2–1. Shared Features of ATP III and ATP II

- Continued identification of LDL cholesterol lowering as the primary goal of therapy
- Consideration of high LDL cholesterol (≥160 mg/dL) as a potential target for LDL-lowering drug therapy, specifically as follows:
  - For persons with multiple risk factors whose LDL levels are high (≥160 mg/dL) after dietary therapy, consideration of drug therapy is recommended
  - For persons with 0-1 risk factor whose LDL levels are 160–189 mg/dL after dietary therapy, drug treatment is optional; if LDL levels are ≥190 mg/dL after dietary therapy, drug treatment should be considered
- Emphasis on intensive LDL-lowering therapy in persons with established CHD
- Identification of three categories of risk for different LDL goals and different intensities of LDL-lowering therapy:
  - CHD and CHD risk equivalents* (other forms of clinical atherosclerotic disease)
  - Multiple (2+) risk factors†
  - 0–1 risk factor
- Identification of population groups, besides middle-aged men, for detection of high LDL cholesterol (and other lipid risk factors) and for clinical intervention. These include:
  - Young adults
  - Postmenopausal women
  - Older persons
- Emphasis on weight loss and physical activity to enhance risk reduction in persons with elevated LDL cholesterol

* A CHD risk equivalent is a condition that carries an absolute risk for developing new CHD equal to the risk for having recurrent CHD events in persons with established CHD.

† Risk factors that continue to modify the LDL goal include cigarette smoking, hypertension, a low level of high-density lipoprotein (HDL) cholesterol, family history of premature CHD, age, and diabetes. Note that in ATP III, diabetes is regarded as a CHD risk equivalent. A high HDL cholesterol remains a “negative” risk factor: its presence subtracts one risk factor from the risk factor count.

3. New features of ATP III

While ATP III maintains attention to intensive treatment of patients with CHD, its major new feature is a focus on primary prevention in persons with multiple risk factors. Many of these persons have a relatively high risk for CHD and will benefit from more intensive LDL-lowering treatment than is recommended in ATP II. Table I.3–1. shows the new features of ATP III.

Table I.3–1. New Features of ATP III

Focus on Multiple Risk Factors

- Raises persons with diabetes without CHD (most of whom display multiple risk factors) to the risk level of CHD risk equivalent
- Uses Framingham projections of 10-year absolute CHD risk (i.e., the percent probability of having a CHD event in 10 years) to identify certain patients with multiple (2+) risk factors for more intensive treatment
- Identifies persons with multiple metabolic risk factors (metabolic syndrome) as candidates for intensified therapeutic lifestyle changes

Modifications of Lipid and Lipoprotein Classification

- Identifies LDL cholesterol <100 mg/dL as optimal
- Raises categorical low HDL cholesterol from <35 mg/dL to <40 mg/dL because the latter is a better measure of a depressed HDL
- Lowers the triglyceride classification cutpoints to give more attention to moderate elevations

Support for Implementation

- Recommends lipoprotein analysis (total cholesterol, LDL cholesterol, HDL cholesterol, and triglycerides) as the preferred initial test, rather than screening for total cholesterol and HDL alone
- Encourages use of plant stanols/sterols and viscous (soluble) fiber as therapeutic dietary options to enhance lowering of LDL cholesterol
- Presents strategies for promoting adherence to therapeutic lifestyle changes and drug therapies
- Recommends treatment beyond LDL lowering for persons with triglycerides ≥200 mg/dL

4. Relation of ATP III to NCEP's public health approach

To reduce the burden of coronary atherosclerosis in society, LDL-cholesterol concentrations and other CHD risk factors must be kept as near to an optimal level as possible through the *public health (population) approach*. Lowering LDL-cholesterol levels in the whole population and keeping them low requires adoption of a low saturated fat and low cholesterol diet, maintenance of a healthy weight, and regular physical activity. NCEP has separately produced a Population Panel Report (National Cholesterol Education Program 1990; Report of the Expert Panel on Population Strategies . . . 1991) that outlines a strategy for the public health approach. The population approach for controlling CHD risk factors will, in the long term, have the greatest impact on reducing the magnitude of cardiovascular disease in the United States. Nonetheless, for persons in whom LDL-cholesterol concentrations are significantly elevated, a *clinical strategy* is also required. NCEP's recommendations for the clinical approach are contained in the Adult Treatment Panel reports. The clinical and population approaches are complementary (Cleeman and Lenfant, 1998). ATP III updates NCEP's clinical guidelines for cholesterol management. It also attempts to provide a bridge between clinical management and population strategy. Clinical professionals are integral to the public health approach. The clinical approach alone cannot overcome the burden of atherosclerotic disease in the general population. A parallel

and simultaneous effort must be made to promote changes in population life habits to retard atherogenesis. The clinical approach can, however, delay or prevent the onset of CHD and prolong the lives of many persons at increased risk.

5. Relation of ATP III to other clinical guidelines

Since the publication of ATP II, other bodies have published guidelines for CHD risk reduction. For persons with established CHD, ATP III recommendations largely match other guidelines. Recent clinical trials confer a strong scientific base for the benefit of cholesterol-lowering therapy in secondary prevention, making it easier to achieve common ground with other guidelines. There is less congruence on guidelines for primary prevention through clinical therapy. Several recent guidelines place almost exclusive priority for treatment on persons at high risk in the short term, (i.e., ≤10 years). This priority is dictated largely by cost considerations, particularly the costs of cholesterol-lowering drugs. ATP III likewise identifies individuals at high short-term risk who need intensive intervention. However, an important feature of the ATP III guidelines (as in ATP I and ATP II) is extension of the clinical approach to the reduction of long-term (i.e., >10-year) risk. By so doing, ATP III links clinical therapy to the public health approach and goes beyond the more restrictive recommendations of some guideline committees. The panel concluded that clinical guidelines should not be truncated to include only persons at high short-term risk. High serum cholesterol itself is a major cause of the build-up of coronary atherosclerosis, and hence of the development of CHD in the long term. For this reason, ATP III stresses the need for long-term prevention of coronary atherosclerosis, as well as short-term prevention of acute coronary syndromes resulting from advanced atherosclerosis.

A comment is required about the relationship of ATP III to what is commonly called *global risk assessment* for CHD. In recent clinical guidelines, assessment of absolute risk (global risk) for experiencing acute coronary syndromes over the short term (≤10 years) has assumed increasing importance for primary prevention. These estimates provide a guide for selecting persons for clinical intervention. Accordingly, ATP III can be considered the "cholesterol component" of integrated, short-term risk reduction. At the same time, ATP III can be viewed as a broad-based approach to reducing CHD risk through short-term and long-term control of high serum cholesterol and related disorders of lipid and lipoprotein metabolism. Thus, on the one hand, high serum cholesterol can be identified in the context of global risk assessment that employs all other risk factors. Alternatively, risk assessment can be performed for persons in whom high serum cholesterol and related lipid disorders are detected independently. Thus, ATP III guidelines are designed to be flexible for use in various approaches to primary prevention.

II. Rationale for Intervention

1. Basic description of lipids and lipoproteins

Cholesterol is a fat-like substance (lipid) that is present in cell membranes and is a precursor of bile acids and steroid hormones. Cholesterol travels in the blood in distinct particles containing both lipid and proteins (lipoproteins). Three major classes of lipoproteins are found in the serum of a fasting individual: low density lipoproteins (LDL), high density lipoproteins (HDL), and very low density lipoproteins (VLDL). Another lipoprotein class, intermediate density lipoprotein (IDL), resides between VLDL and LDL; in clinical practice, IDL is included in the LDL measurement.

LDL cholesterol typically makes up 60–70 percent of the total serum cholesterol. It contains a single apolipoprotein, namely apo B-100 (apo B). LDL is the major atherogenic lipoprotein and has long been identified by NCEP as the primary target of cholesterol-lowering therapy. This focus on LDL has been strongly validated by recent clinical trials, which show the efficacy of LDL-lowering therapy for reducing risk for CHD.

HDL cholesterol normally makes up 20–30 percent of the total serum cholesterol. The major apolipoproteins of HDL are apo AI and apo AII. HDL-cholesterol levels are inversely correlated with risk for CHD. Some evidence indicates that HDL protects against the development of atherosclerosis, although a low HDL level often reflects the presence of other atherogenic factors.

The VLDL are triglyceride-rich lipoproteins, but contain 10–15 percent of the total serum cholesterol. The major apolipoproteins of VLDL are apo B 100, apo Cs (CI, CII, and CIII), and apo E. VLDL are produced by the liver and are precursors of LDL; some forms of VLDL, particularly VLDL remnants, appear to promote atherosclerosis, similar to LDL. VLDL remnants consist of partially degraded VLDL and are relatively enriched in cholesterol ester. Strictly speaking, IDL belongs to remnant lipoproteins although, in clinical practice, IDL is included in the LDL fraction.

A fourth class of lipoproteins, chylomicrons, are also triglyceride-rich lipoproteins; they are formed in the intestine from dietary fat and appear in the blood after a fat-containing meal. The apolipoproteins of chylomicrons are the same as for VLDL except that apo B-48 is present instead of apo B-100. Partially degraded chylomicrons, called chylomicron remnants, probably carry some atherogenic potential.

Although LDL receives primary attention for clinical management, growing evidence indicates that both VLDL and HDL play important roles in atherogenesis. In this report, therefore, VLDL and HDL receive consideration after LDL in the overall management of persons at risk for CHD.

2. LDL cholesterol as the primary target of therapy

ATP I and ATP II identified LDL as the primary target for cholesterol-lowering therapy, and ATP III continues this emphasis. This designation is based on a wide variety of observational

and experimental evidence amassed over several decades from animal, pathological, clinical, genetic, and different types of population studies. Many earlier studies measured only serum total cholesterol, although most of total cholesterol is contained in LDL. Thus, the robust relationship between total cholesterol and CHD found in epidemiological studies strongly implies that an elevated LDL is a powerful risk factor. Subsequent studies have shown that LDL is the most abundant and clearly evident atherogenic lipoprotein. The role of LDL in atherogenesis is confirmed by genetic disorders in which serum LDL cholesterol is markedly increased in the absence of other CHD risk factors. Notable examples of such genetic disorders are homozygous and heterozygous forms of familial hypercholesterolemia; in both, atherogenesis is markedly accelerated. Finally, a causal role for LDL has been corroborated by controlled clinical trials of LDL lowering; recent trials especially have revealed a striking reduction in incidence of CHD. Evidence for LDL being both a major cause of CHD and a primary target of therapy will be examined in some detail.

a. Serum LDL cholesterol as a major cause of CHD

The induction of hypercholesterolemia is a prerequisite for atherogenesis, and sometimes myocardial ischemia, in various experimental animals. In addition, certain species have hereditary forms of hypercholesterolemia and develop atherosclerosis spontaneously; a classical example is the WHHL rabbit, which carries the same molecular defect as human familial hypercholesterolemia. In contrast, low LDL-cholesterol levels are well tolerated. LDL cholesterol as low as 25–60 mg/dL is physiologically sufficient (Brown and Goldstein, 1986). Animal species that do not develop atherosclerosis generally have LDL-cholesterol levels below 80 mg/dL. The LDL-cholesterol concentration in the newborn infant is approximately 30 mg/dL, indicating that such low levels are safe. Moreover, persons who have extremely low levels of LDL throughout life due to familial hypobetalipoproteinemia have documented longevity (Glueck et al., 1976).

Epidemiological investigations of human populations incriminate high levels of LDL cholesterol as being atherogenic. In population studies, the serum total cholesterol is a good surrogate for LDL-cholesterol levels. The Framingham Heart Study (Wilson et al., 1998), the Multiple Risk Factor Intervention Trial (MRFIT) (Stamler et al., 1986), and the Lipid Research Clinics (LRC) trial (Lipid Research Clinics Program 1984a,b) found a direct relationship between levels of LDL cholesterol (or total cholesterol) and the rate of new-onset CHD in men and women who were initially free of CHD. The same relation holds for recurrent coronary events in people with established CHD (Rossouw et al., 1990; Pekkanen et al., 1990; Wong et al., 1991). Any LDL cholesterol above 100 mg/dL appears to be atherogenic. The prevalance of elevated levels in large part accounts for the near-universal development of coronary atherosclerosis in the United States and the high attendant risk for developing CHD over a lifetime—49 percent for men and 32 percent for women (Lloyd-Jones et al., 1999).

Studies across different populations reveal that those with higher cholesterol levels have more atherosclerosis and CHD than do those having lower levels (McGill 1968; Keys et al., 1980; 1984). People who migrate from regions where average serum cholesterol in the general population is low to areas with high cholesterol levels show increases in their cholesterol levels

as they acculturate. These higher levels in turn are accompanied by more CHD (Kagan et al., 1974; Toor et al., 1960).

The positive relationship between serum cholesterol levels and the development of first or subsequent attacks of CHD is observed over a broad range of LDL-cholesterol levels; the higher the level, the greater the risk (Stamler et al., 1986). Early prospective data suggested that the risk of CHD plateaued at lower cholesterol levels, but this apparent plateau has disappeared in larger studies (Stamler et al., 1986; Law et al., 1994b; Law 1999). Only in populations that maintain very low levels of serum cholesterol, e.g., total cholesterol <150 mg/dL (or LDL cholesterol <100 mg/dL) throughout life do we find a near-absence of clinical CHD (Keys et al., 1980; Grundy et al., 1990; People's Republic . . . 1992; Law et al., 1994a–c; Law 1999).

Atherosclerosis generally can first be identified by gross pathological examination of coronary arteries in adolescence or early adulthood (McGill et al., 1997; 1998; 2000). The subsequent rate of atherogenesis is proportional to the severity of ambient risk factors including serum cholesterol levels. Moreover, the cholesterol level in young adulthood predicts development of CHD later in life. In three prospective studies with long-term followup (Anderson et al., 1987; Klag et al., 1993; Stamler et al., 2000), detection of elevated serum cholesterol in early adulthood predicted an increased incidence of CHD in middle-age.

The power of elevated LDL to cause CHD is shown most clearly in persons with genetic forms of hypercholesterolemia (Brown and Goldstein, 1986). In these persons, advanced coronary atherosclerosis and premature CHD occur commonly even in the complete absence of other risk factors. These disorders provide the strongest evidence that LDL is a powerful atherogenic lipoprotein.

Since LDL-cholesterol levels <100 mg/dL throughout life are associated with a very low risk for CHD in populations, they can be called *optimal.* Even when LDL-cholesterol concentrations are *near optimal* (100–129 mg/dL), atherogenesis occurs; hence, such levels must also be called *above optimal.* At levels that are *borderline high* (130–159 mg/dL), atherogenesis proceeds at a significant rate, whereas at levels that are *high* (160–189 mg/dL) and *very high* (≥190 mg/dL) it is markedly accelerated. These relationships are confirmed by the log-linear relationship between serum cholesterol levels and CHD risk observed in many populations (Law et al., 1994b; Law 1999).

The relation of elevated LDL cholesterol to the development of CHD must be viewed as a multi-step process beginning relatively early in life (Stary et al., 1992; 1994; 1995). The first stage of atherogenesis is the fatty streak, which consists largely of cholesterol-filled macrophages; most of the cholesterol in fatty streaks is derived from LDL cholesterol. The second stage consists of fibrous plaques in which a layer of scar tissue overlies a lipid-rich core. Other risk factors contribute to plaque growth at this phase. The third stage is represented by the development of unstable plaques that are prone to rupture and formation of luminal thrombosis. Plaque rupture (or erosion) is responsible for most acute coronary syndromes (myocardial infarction, unstable angina, and coronary death) (Libby 1995; Libby et al., 1998; Fuster et al., 1999; Theroux and Fuster, 1998). Elevated LDL cholesterol plays a role in the development of the mature coronary plaque, which is the substrate for the unstable plaque. Recent evidence also indicates that elevated LDL cholesterol contributes to plaque instability as well; conversely, LDL cholesterol

lowering stabilizes plaques and reduces the likelihood of acute coronary syndromes. Clinical intervention with LDL-lowering therapy in patients with advanced coronary atherosclerosis (short-term risk reduction) thus aims to stabilize plaques and to prevent acute coronary syndromes (Brown et al., 1995; Brown and Zhao, 2000). In contrast, LDL lowering earlier in life slows atherosclerotic plaque development, the foundation of the unstable plaque. This fact provides a rationale for long-term lowering of LDL cholesterol using both public-health and clinical approaches.

b. Serum LDL cholesterol as target of therapy

Notwithstanding this diverse evidence, the ultimate proof of the benefits of lowering LDL cholesterol is through clinical trial. A large number of clinical trials of cholesterol-lowering therapy have been carried out over the past four decades (Grundy 2000a). The history of cholesterol-lowering trials records one of the major advances in modern medicine (Grundy 2000a). The initial encouraging findings of earlier trials have recently been reinforced by the robust findings of a large number of studies, especially those using HMG CoA reductase inhibitors (statins). Clinical outcomes in terms of CHD incidence and CHD mortality are summarized in Table II.2–1 for pre-statin and statin trials in which LDL-cholesterol reduction was the major lipid response. The pre-statin trials provided strong evidence that CHD incidence is reduced by cholesterol-lowering therapy; statin trials extend the benefit to reduction of CHD mortality, and even to total mortality (see Section II.9).

Table II.2–1.* CHD Outcomes in Clinical Trials of LDL-Cholesterol-Lowering Therapy†

Intervention	No. trials	No. treated	Person-years	Mean cholesterol reduction (%)	CHD Incidence (% change)	CHD Mortality (% change)
Surgery	1	421	4,084	22	**-43**	-30
Sequestrants	3	1,992	14,491	9	**-21**	-32
Diet	6	1,200	6,356	11	**-24**	-21
Statins	12	17,405	89,123	20	**-30**	**-29**

* This table is adapted from the meta-analysis of Gordon 2000.

† Not included among these clinical trials are those employing fibrates, nicotinic acid, and hormones. The major actions of fibrates and nicotinic acid are on triglyceride and HDL, whereas hormone trials have effects beyond serum lipids.

Additional evidence of the benefit of LDL lowering is provided by study of coronary lesion architecture through coronary angiography. A summary of the evidence from different categories of angiographic trials reveals that LDL-lowering therapy produces favorable outcomes for coronary lesions, with a strong trend for a beneficial outcome for major coronary events (Table II.2–2).

Table II.2–2. Odds Ratios for Coronary Lesion Regression vs. Progression and for Cardiovascular Event Rates in Angiographic Trials of LDL-Lowering Therapy (Including Comparison with Placebo and Trials of Calcium Channel Blockers)

Trials	Coronary Lesion Regression vs. Progression Odds Ratio (Number >1 means greater regression than progression)	Cardiovascular Event Rates Odds Ratio (Number <1 means fewer events on therapy)
Statins	2.1 (1.6, 2.7)* (p<0.0001)(vs. placebo)† (p<0.0001)vs. calcium blocker)‡	0.67 (0.57, 0.80)* (p<0.0001)† (p=0.012)‡
Ileal Excluson (POSCH)	4.7 (2.5, 9.0)* (p<0.0001)† (p=0.002)‡	0.57 (0.41, 0.78)* (p<0.0005)† (p=0.0082)‡
Sequestrants	3.2 (0.9, 11.4)* NS† NS‡	0.41 (0.17, 1.00)* NS† NS‡
Lifestyle	10.7 (4.0, 29.0)* (p<0.0001)† (p=0.0004)‡	0.57 (0.23, 1.46)* NS† NS‡
Combination Therapy	3.0 (1.8, 5.1)* (p<0.0001)† (p=0.03)‡	0.54 (0.36, 0.81)* (p=0.0031)† (p=0.021)‡
Calcium Channel Blockers	1.0 (0.6, 1.4)* NS†	1.33 (0.94, 1.89)* NS†

* Confidence intervals.

† Statistical significance compared to placebo.

‡ Statistical significance compared to calcium channel blocker trials.

This table was modified from a recently published meta-analysis provided by G.B.J. Mancini (Holmes et al., 2000). In this analysis, to assess trends and to synthesize the results of disparate trials, the reported trial results were examined with respect to the main angiographic and clinical endpoints. Odds ratios were calculated comparing progression and regression as dichotomous responses, excluding mixed or no-change responses. Odds ratios also were calculated for reported events. Tests of homogeneity were performed and were not significant, i.e., it may be assumed that the different trials in each category estimate a common odds ratio even though definitions of progression and regression and of clinical events differ somewhat among the trials. The significance of the calculated pooled odds ratios as well as 95 percent confidence intervals (CI) were calculated. Paired comparisons between combined odds ratios for different trial groups were carried out using Bonferroni's correction for multiple comparisons. The clinical trials compared in these studies were the following:

Statin trials: LCAS, CIS, CARS, Post-CABG, REGRESS, PLAC I, CCAIT, MAAS, MARS

Surgical therapy: POSCH

Sequestrant Trials: STARS, NHLBI Type II

Lifestyle intervention: Heidelberg, STARS, Lifestyle Heart Trial

Combination drug therapy: HARP, SCRIP, SCOR, FATS (lovastatin/colestipol), FATS (nicotinic acid/colestipol), CLAS

Calcium channel blocker monotherapy trials: Montreal Heart Institute Study, INTACT

Both clinical trials and angiographic studies show reductions in CHD risk that are broadly consonant with what was projected from cohort studies. The issue of whether cholesterol-lowering therapy reduces total mortality is considered in detail subsequently (see Section II.9)

In recent trials, statin therapy reduced risk for CHD in men and women, in those with or without heart disease, in older and younger subjects, in those with diabetes and hypertension, and at most levels of cholesterol. These benefits for different subgroups are shown by meta-analysis prepared for ATP III by panel members and statistical consultants at NHLBI (Table II.2–3) and by a recent analysis from two combined secondary prevention trials (CARE and LIPID) (Sacks et al., 2000b; Rubins et al., 1999).

Table II.2–3. CHD Risk Reduction (RR) in Cholesterol Trial Subgroups

CHD Risk Reduction in Cholesterol Trial Subgroups							
Trait	**Subgroup**	**N**	**Mean RR**	**95% CI**		**P-Interaction***	**Trials†**
Gender	Male	21651	32%	26%	36%	0.759	AFCAPS, POSCH, CARE, LIPID, PLAC1, 4S, CCAIT
	Female	4147	34%	20%	45%		
Age	Younger	19119	33%	27%	39%	0.514	AFCAPS, POSCH, Upjohn, VAHIT, WOSCOPS, CARE, LIPID, PLAC1, CCAIT
	Older	16549	30%	24%	36%		
Hyper-tension	No	14623	33%	25%	39%	0.068	AFCAPS, POSCH, VAHIT, CARE, LIPID
	Yes	8520	22%	12%	31%		
Smoker	No	18343	23%	16%	30%	0.075	AFCAPS, POSCH, VAHIT, WOSCOPS, CARE, LIPID, Newcastle, CCAIT
	Yes	12193	32%	25%	39%		
Diabetes	No	25147	27%	21%	32%	0.596	AFCAPS, POSCH, VAHIT, CARE, LIPID, 4S
	Yes	2443	31%	17%	42%		
Choles-terol	Lower	14180	27%	20%	34%	0.480	POSCH, Upjohn, WOSCOPS, CARE, LIPID
	Higher	7519	32%	22%	40%		
LDL	Lower	11715	29%	22%	36%	0.012	AFCAPS, POSCH, VAHIT, WOSCOPS, CARE, LIPID, Helsinki
	Higher	16071	40%	35%	45%		
HDL	Lower	16739	33%	27%	38%	0.865	AFCAPS, POSCH, VAHIT, WOSCOPS, CARE, LIPID, Helsinki
	Higher	17021	34%	28%	39%		
TG	Lower	10791	30%	22%	38%	0.567	AFCAPS, POSCH, VAHIT, WOSCOPS, CARE, LIPID, Helsinki
	Higher	12192	27%	20%	34%		

* P-Interaction refers to the difference in treatment effect between the subgroups for each trait. The higher the number, the less is the difference in risk reduction between the two subgroups. The P-interaction term provides a statistical interpretation of the difference in relative risk reduction noted for the two subgroups. In statistical terms, the higher the number, the more homogeneous is the effect between the two subgroups. The dichotomous categories shown in this table vary in cutpoints depending on the results reported for each of the individual studies.

† See appendix for listing of the full names of these clinical trials.

Results of clinical trials of LDL lowering find support from a review of world-wide prospective studies on the relation between serum cholesterol levels and CHD incidence. In fact, Law et al. (Law et al., 1994b; Law 1999) reported a high congruence between results of prospective epidemiology studies and clinical trials. One advantage of epidemiological studies is their ability to examine and predict long-term influences. Earlier clinical trials found that a 1 percent reduction in serum total cholesterol level reduces risk for CHD by about 2 percent. Recent clinical trials with statins indicate that a 1 percent decrease in LDL cholesterol reduces risk by about 1 percent. However, across-country epidemiological studies strongly suggest that maintaining a lower serum cholesterol for periods longer than the duration of clinical trials yields a greater reduction in risk than is predicted from clinical trials. In populations that maintain very low cholesterol levels throughout life, the population risk for CHD is much lower than in populations that habitually carry higher cholesterol levels (Keys et al., 1980; 1984) In contrast, in high-risk populations, the reduction in CHD attained with aggressive cholesterol-lowering therapy still leaves absolute CHD rates far above those in low-risk populations. From another point of view, epidemiological studies suggest that beginning cholesterol-lowering therapy at an earlier age will lead to a greater risk reduction than starting later in life. For example, using data from a large number of cohort studies, Law et al. (Law et al., 1994b; Law 1999) found that a 10 percent reduction in serum cholesterol level attained at age 40 yields a reduction in relative risk for CHD of 50 percent at age 40, whereas a 10 percent cholesterol reduction gives only a 20 precent reduction in risk if begun at age 70. This finding implies that the greatest long-term benefit is attained by early intervention; conversely, later intervention yields lesser benefit in risk reduction.

Evidence statement: *Multiple lines of evidence from experimental animals, laboratory investigations, epidemiology, genetic forms of hypercholesterolemia, and controlled clinical trials indicate a strong causal relationship between elevated LDL cholesterol and CHD (A1, B1, C1).*
Recommendation: *LDL cholesterol should continue to be the primary target of cholesterol-lowering therapy.*

c. Categories and classification of total cholesterol and LDL cholesterol

ATP III maintains a classification of serum total cholesterol and LDL cholesterol similar to that in ATP II (National Cholesterol Education Program 1993; 1994) with some minor modifications. The ATP III classification is shown in Table II.2–4.

Table II.2–4. ATP III Classification of Total Cholesterol and LDL Cholesterol

Total Cholesterol (mg/dL)		LDL Cholesterol (mg/dL)	
		<100	Optimal
<200	Desirable	100–129	Near optimal/above optimal
200–239	Borderline High	130–159	Borderline High
≥240	High	160–189	High
		≥190	Very High

3. Other lipid risk factors

a. Triglycerides

1) Elevated serum triglycerides (and triglyceride-rich lipoproteins) as a risk factor

Many prospective epidemiological studies have reported a positive relationship between serum triglyceride levels and incidence of CHD (Austin et al., 1998; Assmann et al., 1998a). However, early multivariate analyses generally did not identify serum triglycerides as an independent risk factor for CHD (Hulley et al., 1980). This failure results from the large number of intercorrelated variables associated with elevated triglycerides. Lipoprotein metabolism is integrally linked, and elevations of serum triglycerides can be confounded by significant correlations with total, LDL, and HDL-cholesterol levels. Nonlipid risk factors of obesity, hypertension, diabetes, and cigarette smoking are also interrelated with triglycerides (Grundy 1998a) as are several emerging risk factors (insulin resistance, glucose intolerance, and prothrombotic state [see Section II.5]). Thus, many persons with elevated triglycerides are at increased risk for CHD, even when this greater risk cannot be independently explained by triglycerides. Still, renewed interest in the importance of elevated triglycerides has been stimulated by the publication of meta-analyses that found that raised triglycerides are in fact an *independent risk factor* for CHD (Austin et al., 1998; Assmann et al., 1998a). This independence suggests that some triglyceride-rich lipoproteins (TGRLP) are atherogenic.

2) Lipoprotein remnants as atherogenic lipoproteins

The most likely candidates for atherogenic TGRLP are remnant lipoproteins. These lipoproteins include small, VLDL and IDL. They are cholesterol-enriched particles and have many of the properties of LDL. Reviews of several independent lines of evidence support the atherogenicity of remnants (Havel 1990; Krauss 1998; Grundy 1998a). Specific evidence can be cited. In experimental animals, cholesterol-enriched remnants definitely cause atherosclerosis (Nordestgaard and Lewis, 1991; Breslow 1996). Genetic hyperlipidemias characterized by the accumulation of lipoprotein remnants commonly produce premature CHD and peripheral vascular disease in humans (Weisgraber et al., 1990; Mahley et al., 1991). In several clinical studies in which remnants were specifically identified, their elevations emerged as strong predictors of coronary atherosclerosis or CHD (Tatami et al., 1981; Steiner et al., 1987; Krauss

et al., 1987; Phillips et al., 1993; Tornvall et al., 1993; Hodis et al., 1994; Koren et al., 1996; Karpe et al., 2001; Takeichi et al., 1999; Thompson 1998; Sacks et al., 2000a). This relation of remnants to CHD was also noted in several reviews (Krauss 1998; Grundy 1998a). Finally, drug therapies that reduce remnant lipoproteins (fibrates, nicotinic acid, and statins) are accompanied by reduced risk for CHD (see Section II.3.d.).

3) VLDL cholesterol as a marker for remnant lipoproteins

Although a variety of methods have been developed to identify lipoprotein remnants, most are not applicable to clinical practice; the most readily available measure for clinical practice is VLDL cholesterol. Some cholesterol in VLDL may reside in non-atherogenic TGRLP, but most of it apparently occurs in atherogenic remnants (Kuchinskiene and Carlson, 1982; Miller and Small, 1983; Tatami et al., 1981; Bjorkegren et al., 2000). Thus, VLDL cholesterol, as a marker for remnant lipoproteins, is a potential target of cholesterol-lowering therapy.

4) Causes of elevated serum triglyceride

Several causes underlie elevated triglycerides in the general population (Stone 1994; Chait and Brunzell, 1990).

- Overweight and obesity
- Physical inactivity
- Cigarette smoking
- Excess alcohol intake
- Very high-carbohydrate diets (>60 percent of total energy)
- Other diseases (type 2 diabetes, chronic renal failure, nephrotic syndrome)
- Certain drugs (corticosteroids, protease inhibitors for HIV, beta-adrenergic blocking agents, estrogens)
- Genetic factors

In persons with none of these factors, serum triglyceride levels typically are less than 100 mg/dL (Heiss et al., 1980). As some of these triglyceride-raising factors develop, levels commonly rise into the range of 150 to 199 mg/dL (Denke et al., 1993; 1994). Although several factors can elevate triglycerides (see above), most common are overweight/obesity and physical inactivity (Denke et al., 1993; 1994; National Institutes of Health 1998a,b; Hardman 1999; Berg et al., 1997). When triglycerides rise to ≥200 mg/dL, these latter factors may contribute, but genetic influences play an increasing role as well (Goldstein et al., 1973b).

5) Categories of serum triglycerides

ATP II (National Cholesterol Education Program 1993; 1994) adopted conservative definitions of serum triglyceride ranges based on the perceived weak independent relationship of triglycerides to CHD. Multivariate analysis of prospective studies at that time suggested that higher triglycerides carry little independent risk for CHD. After review of more recent evidence, the ATP III panel concluded that the link between serum triglycerides and CHD is stronger than previously recognized. Elevated triglycerides are widely recognized as a marker for increased

risk, as revealed in univariate analysis (Hulley et al., 1980; Austin et al., 1998; Assmann et al., 1998a). In this context elevations in serum triglycerides can be considered a marker for atherogenic remnant lipoproteins, for other lipid risk factors (small LDL particles and low HDL), for other nonlipid risk factors (elevated blood pressure), and for emerging risk factors (insulin resistance, glucose intolerance, prothrombotic state) (Grundy 1998a). Thus, the finding of elevated serum triglycerides helps to identify persons who are at risk and who need intervention for risk reduction. In addition, when triglyceride levels are ≥200 mg/dL, the presence of increased quantitites of atherogenic remnant lipoproteins can heighten CHD risk substantially beyond that predicted by LDL cholesterol alone (Steiner et al., 1987; Havel 2000). For these reasons, ATP III modified the triglyceride classification to give more attention to moderate elevations.

Table II.3–1 compares the older ATP II classification with the new ATP III classification for serum triglycerides.

Table II.3–1. Classification of Serum Triglycerides

Triglyceride Category	ATP II Levels	ATP III Levels
Normal triglycerides	<200 mg/dL	<150 mg/dL
Borderline-high triglycerides	200–399 mg/dL	150–199 mg/dL
High triglycerides	400–1000 mg/dL	200–499 mg/dL
Very high triglycerides	>1000 mg/dL	≥500 mg/dL

6) Elevated serum triglycerides and triglyceride-rich lipoproteins as targets of therapy

Elevated triglycerides represent one factor within a set of risk-factor targets in persons who are overweight, obese, sedentary, or cigarette smokers. Life-habit changes—weight control, exercise, and smoking cessation—will favorably modify multiple risk factors including elevated triglycerides (National Institutes of Health 1998a,b). Thus, elevated serum triglycerides are a potential target for therapeutic lifestyle changes.

Among triglyceride targets, remnant lipoproteins are the strongest candidates for direct clinical intervention designed to reduce risk for CHD. Atherogenic remnants can be lowered by weight reduction in overweight and obese persons (Wilson et al., 1992) and by lipid-lowering drugs (statins, fibrates, and nicotinic acid) (Vega and Grundy, 1985; 1990b; 1994; Mostaza et al., 1997). However, none of these therapies reduce only remnants; they modify either concentrations or characteristics of all lipoprotein species. This makes it difficult to confirm the efficacy of lowering remnants per se through clinical trials. Nonetheless, the strong evidence for independent atherogenicity of elevated remnants makes them appropriate targets for cholesterol-lowering therapy (Reardon et al., 1985; Steiner et al., 1987; Havel 2000).

Evidence statements: *Elevated serum triglycerides are associated with increased risk for CHD (C1). In addition, elevated triglycerides are commonly associated with other lipid and nonlipid risk factors (C1).*
Recommendation: *Greater emphasis should be placed on elevated triglycerides as a marker for increased risk for CHD. First-line therapy for elevated serum triglycerides should be therapeutic lifestyle changes.*

Evidence statement: *Some species of triglyceride-rich lipoproteins, notably, cholesterol-enriched remnant lipoproteins, promote atherosclerosis and predispose to CHD (C1).*
Recommendation: *In persons with high serum triglycerides, elevated remnant lipoproteins should be reduced in addition to lowering of LDL cholesterol.*

b. Non-HDL cholesterol

1) Non-HDL cholesterol as a risk factor

Since VLDL cholesterol is highly correlated with atherogenic remnant lipoproteins, it can reasonably be combined with LDL cholesterol to enhance risk prediction when serum triglycerides are high. The sum of VLDL+LDL cholesterol is called non-HDL cholesterol. It is calculated routinely as total cholesterol minus HDL cholesterol. Non-HDL cholesterol includes all lipoproteins that contain apo B. In persons with high triglycerides (200–499 mg/dL) most cholesterol occurring in the VLDL fraction is contained in smaller (remnant) VLDL (Kuchinskiene and Carlson, 1982; Steiner et al., 1987; Miller and Small, 1983; Tatami et al., 1981; Bjorkegren et al., 2000). Few prospective studies have explicitly examined the predictive power of non-HDL-cholesterol levels versus LDL-cholesterol levels in a large group of persons with hypertriglyceridemia. However, Gordon et al. (Gordon et al., 1989) reported that because non-HDL cholesterol and HDL cholesterol are intercorrelated, they overlap in prediction, whereas LDL cholesterol is independent of HDL cholesterol as a predictor. Thus, some of the predictive power usually attributed to HDL cholesterol could be explained by elevations of non-HDL cholesterol. Frost and Havel (1998) proposed that existing data actually favor use of non-HDL cholesterol over LDL cholesterol in clinical evaluation of risk. This proposal is strengthened by a recent report from the follow-up of the Lipid Research Clinic cohort which showed a stronger correlation with coronary mortality for non-HDL cholesterol than for LDL cholesterol (Cui et al., 2001). Moreover, non-HDL cholesterol is highly correlated with total apolipoprotein B (apo B) (Vega and Grundy, 1990a; Abate et al., 1993); apolipoprotein B is the major apolipoprotein of all atherogenic lipoproteins. Serum total apo B also has been shown to have a strong predictive power for severity of coronary atherosclerosis and CHD events (Sedlis et al., 1986; Sniderman 1988; Marcovina et al., 1988; Reinhart et al., 1990; Sniderman et al., 1991; Levinson and Wagner, 1992; Kwiterovich et al., 1992; Tornvall et al., 1993; Westerveld et al., 1998; Gotto et al., 2000; Lamarche et al., 1996; Lemieux et al., 2000). Because of the high correlation between non-HDL cholesterol and apolipoprotein B levels (Vega and Grundy, 1990a; Abate et al., 1993), non-HDL cholesterol represents an acceptable surrogate marker for total apolipoprotein B in routine clinical practice; standardized measures of apolipoprotein B are not

widely available for routine measurement. Potential uses of non-HDL cholesterol are for initial testing or for monitoring of response in the nonfasting state; the measurement is reliable in nonfasting serum, whereas calculated LDL cholesterol can be erroneous in the presence of postprandial hypertriglyceridemia.

In most persons with triglyceride levels <200 mg/dL, VLDL cholesterol is not substantially elevated (Lipid Research Clinics Program Epidemiology Committee 1979), and further, non-HDL cholesterol correlates highly with LDL cholesterol (Vega and Grundy, 1990a; Abate et al., 1993); therefore, adding VLDL cholesterol to LDL cholesterol at lower triglyceride levels would be expected to provide little additional power to predict CHD. When triglyceride levels are ≥200 mg/dL, VLDL cholesterol levels are distinctly raised (Lipid Research Clinics Program Epidemiology Committee 1979), and LDL-cholesterol concentrations are less well correlated with VLDL and LDL (non-HDL) cholesterol levels (Vega and Grundy, 1990a; Abate et al., 1993); consequently, LDL cholesterol alone inadequately defines the risk associated with atherogenic lipoproteins. In the presence of high serum triglycerides, non-HDL cholesterol therefore will better represent the concentrations of all atherogenic lipoproteins than will LDL cholesterol alone. On the other hand, when triglyceride levels become very high (e.g., ≥500 mg/dL) some of the cholesterol in TGRLP resides in nonatherogenic forms of larger VLDL and chylomicrons, and non-HDL cholesterol may be less reliable as a predictor of CHD risk.

2) Non-HDL cholesterol as a secondary target of therapy

Clinical trials of cholesterol-lowering therapy have not specifically identified non-HDL cholesterol (independent of LDL) as a target of therapy; thus, it has been difficult to isolate the impact of lowering non-HDL cholesterol per se on CHD risk. However, the same statement could be made about LDL itself. For example, it has been widely assumed from primary and secondary prevention trials of statin therapy that risk reduction is a response to LDL cholesterol lowering. Of interest, however, the percentage reductions of LDL cholesterol and VLDL cholesterol on statin therapy are similar (Vega and Grundy, 1990a).

Consequently, it is not possible to differentiate risk reduction due to LDL lowering from non-HDL cholesterol lowering. Most clinical trials have not specifically included persons with hypertriglyceridemia; thus it can be assumed that lowering of VLDL cholesterol was a minor contributor to risk reduction in statin trials. However, in clinical practice, the situation may be different; when triglycerides are high, a significant fraction of non-HDL cholesterol is contained in VLDL. Here LDL cholesterol may not be the only significant lipid risk factor. Consequently, when triglycerides are high, non-HDL cholesterol (including VLDL cholesterol) can serve as a secondary target of therapy.

A “normal” VLDL cholesterol can be defined as that present when triglycerides are <150 mg/dL; this value typically is ≤30 mg/dL (Lipid Research Clinics Program Epidemiology Committee 1979). Conversely, when triglyceride levels are >150 mg/dL, VLDL cholesterol usually is >30 mg/dL. Thus, a reasonable goal for non-HDL cholesterol is one that is 30 mg/dL higher than the LDL-cholesterol goal. A specific goal of therapy for serum triglycerides is not identified in ATP III for two reasons: (a) triglyceride levels have more day-to-day variability than non-HDL-cholesterol levels and thus are less reliable, and (b) non-HDL cholesterol as a target allows more flexibility in choice of therapies to reduce atherogenic lipoproteins contained in the combined

LDL+VLDL fraction. Non-HDL cholesterol was chosen as a preferred secondary target of therapy over total apo B for three other reasons: (a) standardized measures of total apo B are not widely available in clinical practice; (b) measures of total apo B have not been shown in a large number of prospective studies to carry greater predictive power than non-HDL cholesterol in persons with elevated triglycerides; and (c) measurement of total apo B will constitute an added expense beyond the usual lipoprotein profile.

Evidence statements: *Some species of triglyceride-rich lipoproteins are independently atherogenic; notable among these are cholesterol-enriched remnant lipoproteins (C1). Moreover, VLDL cholesterol is a marker for atherogenic VLDL remnants (C1).*
Recommendation: *In persons with high triglycerides (≥200 mg/dL), VLDL cholesterol should be combined with LDL cholesterol, yielding non-HDL cholesterol. The latter constitutes "atherogenic cholesterol" and should be a secondary target of therapy.*

c. High density lipoproteins (HDL)

1) Low HDL cholesterol as an independent risk factor for CHD

Strong epidemiological evidence links low levels of serum HDL cholesterol to increased CHD morbidity and mortality (Wilson et al., 1998; Gordon et al., 1989; Abbott et al., 1988). High HDL-cholesterol levels conversely convey reduced risk. Epidemiological data taken as a whole signify that a 1 percent decrease in HDL cholesterol is associated with a 2–3 percent increase in CHD risk (Gordon et al., 1989). Epidemiological studies consistently show low HDL cholesterol to be an *independent risk factor* for CHD. Its independent relationship holds after correction for other risk variables in multivariate analysis. In fact, in prospective studies (Wilson et al., 1980; Assmann et al., 1996), HDL usually proves to be the lipid risk factor most highly correlated with CHD risk. ATP II specified low HDL cholesterol (<35 mg/dL) as one of several major risk factors used to modify the therapeutic goal for LDL cholesterol. The definition of a low HDL was set to be the same for both men and women because of the view that a given level of HDL would impart the same risk for men and women.

The mechanistic relationship between low HDL-cholesterol levels and occurrence of CHD has not been fully elucidated. One theory holds that HDL directly participates in the atherogenic process. Some research in laboratory animals backs a direct action. In genetically modified animals, high levels of HDL appear to protect against atherogenesis (Rubin et al., 1991; Plump et al., 1994; Tangirala et al., 1999). In vitro, HDL promotes efflux of cholesterol from foam cells in atherosclerotic lesions (reverse cholesterol transport) (Tall 1998). Recent studies indicate that the antioxidant and anti-inflammatory properties of HDL also inhibit atherogenesis (van Lenten et al., 1995; Navab et al., 2000a,b). Further, some genetic forms of HDL deficiency are accompanied by increased risk for CHD (Ng et al., 1995; Miller et al., 1998); others appear not to be (Romling et al., 1994; Takata et al., 1995; Miccoli et al., 1996). This latter finding raises the possibility that some subspecies of HDL affect atherogenesis whereas others do not. Although there are conflicting data, multiple lines of evidence strongly intimate that HDL plays a direct role in the atherogenic process. If so, it is a potential target for therapy.

The direct role of HDL in atherogenesis probably cannot fully account for the strong predictive power of HDL in epidemiological studies. A low HDL level correlates with the presence of other atherogenic factors (Vega and Grundy, 1996). In many persons, a low HDL level correlates with elevations of serum triglycerides and remnant lipoproteins (Schaefer et al., 1994; Phillips et al., 1981); in addition, low HDL commonly shows linkage with small, dense LDL particles (Austin et al., 1990; Luc et al., 1997; Rainwater 2000; Austin et al., 2000b). The tight association among low HDL, small LDL particles, and elevated triglycerides has evoked the term *lipid triad.* Moreover, a low HDL level can be a sign of insulin resistance and its associated metabolic risk factors (Vega and Grundy, 1996) (see Section II.6 Metabolic Syndrome). Because of the association of low HDL with other atherogenic factors (some of which are not included among standard risk factors), a low HDL cholesterol is not as strongly *independent* in its prediction of CHD as suggested by usual multivariate analysis, i.e., its independence is partially confounded by some risk factors that are not routinely measured, e.g., *emerging risk factors* (see Section II.5). This confounding raises the possibility that therapeutic raising of HDL-cholesterol levels will not reduce CHD risk as much as might be predicted from prospective epidemiological studies (Vega and Grundy, 1996).

Evidence statement: *A low HDL-cholesterol level is strongly and inversely associated with risk for CHD (C1).*

2) Causes of low HDL cholesterol

There are several factors that contribute to low HDL-cholesterol levels that need to be identified in clinical practice (Krauss 1982; Stone 1994; Chait and Brunzell, 1990). These include:

- Elevated serum triglycerides
- Overweight and obesity
- Physical inactivity
- Cigarette smoking
- Very high carbohydrate intakes (>60 percent of total energy intake)
- Type 2 diabetes
- Certain drugs (beta-blockers, anabolic steroids, progestational agents)
- Genetic factors

In the general population, about 50 percent of the variability of serum HDL-cholesterol levels derives from genetic factors (Cohen et al., 1994); the other 50 percent presumably comes from the acquired factors listed above. Moreover, when a person has a genetic predisposition to reduced HDL, acquired factors often drive HDL cholesterol to categorically low levels. Among these acquired factors, overweight and obesity appear to be most important (National Institutes of Health 1998a,b; Brown CD et al., 2000). Part of the effect of overweight and obesity can be explained by their action to raise serum triglycerides, which lowers HDL-cholesterol levels, but they probably reduce HDL cholesterol through other mechanisms as well (Nie et al., 1998; Carr et al., 1999; Tato et al., 1995).

3) Classification of serum HDL cholesterol

The inverse association between HDL-cholesterol concentrations and CHD risk is a continuous variable; no threshold relationship has been identified (Wilson et al., 1998). For this reason, any categorical definition of low HDL cholesterol must be arbitrary. In ATP II (National Cholesterol Education Program 1993; 1994), a low HDL cholesterol was defined as a level <35 mg/dL; the setting of this cutpoint was influenced by the concept that low HDL is primarily a direct cause of atherosclerotic disease. More recently, the role of HDL as an indicator of other risk correlates has been emphasized (Vega and Grundy, 1996; Karhapaa et al., 1994; Lamarche et al., 1993; Assmann et al., 1992). This shift in perception requires a re-examination of the appropriate cutpoint for low HDL. Clearly low HDL levels predict CHD at levels above 35 mg/dL (Wilson et al., 1998); this fact combined with the moderate reductions of HDL cholesterol caused by obesity and physical inactivity led the ATP III panel to recognize a somewhat higher HDL-cholesterol level as a categorical risk factor. The level <40 mg/dL was set as a low HDL cholesterol, both in men and women. Women typically have higher HDL cholesterol levels than men, and a cutpoint of <40 mg/dL will identify more men than women with low HDL cholesterol, i.e., approximately one-third of men and about one-fifth of women in the general population. Setting a different cutpoint for categorical low HDL cholesterol for men and women was rejected because it would make many women who are otherwise at low risk eligible for LDL-lowering drugs. On the other hand, as will be discussed subsequently, a higher level of HDL cholesterol (<50 mg/dL) is defined as a marginal risk factor in women, which will mandate more intensive lifestyle therapies (weight reduction and increased physical activity) (see Section II.6, Metabolic Syndrome).

In prospective studies, including the Framingham Heart Study (Wilson et al., 1998), a high HDL cholesterol is associated with reduced risk for CHD. In ATP II, this level (*high HDL cholesterol)* was also called a *negative risk factor,* and its presence evoked removal of one risk factor from the risk factor count used for setting treatment goals for LDL cholesterol. ATP III affirms the validity of this assignment. The ATP III classification of HDL cholesterol thus is given in Table II.3–2.

Table II.3–2. ATP III Classification of HDL Cholesterol

Serum HDL Cholesterol (mg/dL)	
<40 mg/dL	Low HDL cholesterol
≥60 mg/dL	High HDL cholesterol

Evidence statement: *Population studies show a continuous rise in risk for CHD as HDL-cholesterol levels decline (C1). Higher risk for CHD at lower HDL levels is multifactorial in causation (C1). Although the inverse relationship between HDL cholesterol and CHD shows no inflection points, any reduction in HDL cholesterol from population means is accompanied by increased risk for CHD (C1).*
Recommendation: *A categorical low HDL cholesterol should be defined as a level of <40 mg/dL, in both men and women.*

4) Low HDL cholesterol as a potential target of therapy

Persons with low HDL-cholesterol levels benefit similarly to those with higher HDL cholesterol during LDL-lowering therapy (Table II.2–3). Whether raising HDL per se will reduce risk for CHD has not been resolved. Nonetheless, HDL levels are raised to varying degrees with lipid-modifying drugs, e.g., nicotinic acid (Martin-Jadraque et al., 1996), fibrates (Frick et al., 1987; Rubins et al., 1999), and statins (Kastelein et al., 2000). Furthermore, clinical trials with nicotinic acid (Coronary Drug Project . . . 1975) and fibrates (Frick et al., 1987; Rubins et al., 1999) provide suggestive evidence that HDL raising provides one component of risk reduction with these drugs. Whether the small rise in HDL-cholesterol levels accompanying statin therapy accounts for any of the risk reduction from these drugs is uncertain. Since currently available drugs have multiple actions, it is difficult to dissect fully the benefit of HDL raising from that of reducing atherogenic lipoproteins. Regardless, use of drugs that favorably modify multiple inter-related lipid risk factors appears to reduce risk for CHD (see Section II.3.d, Atherogenic Dyslipidemia). Finally, raising HDL levels by reversal of the major acquired causes of low HDL levels—overweight and obesity, physical inactivity, and smoking—provides the opportunity for further risk reduction in persons with low HDL-cholesterol levels. In addition, modifying these causes will be beneficial for other reasons besides raising HDL-cholesterol concentrations.

Evidence statements: *Clinical trials provide suggestive evidence that raising HDL-cholesterol levels will reduce risk for CHD (A2). However, it remains uncertain whether raising HDL-cholesterol levels per se, independent of other changes in lipid and/or nonlipid risk factors, will reduce risk for CHD.*
Recommendation: *A specific HDL-cholesterol goal level to reach with HDL-raising therapy is not identified. However, nondrug and drug therapies that raise HDL-cholesterol levels and are part of management of other lipid and nonlipid risk factors should be encouraged.*

d. Atherogenic dyslipidemia

A common form of dyslipidemia is characterized by three lipid abnormalities: elevated triglycerides, small LDL particles, and reduced HDL cholesterol (Austin et al., 1998; Krauss 1998; Grundy 1998a). Often the lipoprotein concentrations in this *lipid triad* are not categorically abnormal, but are only marginally deranged. More sophisticated methodology than that used in routine clinical practice can identify these multiple interrelated abnormalities. Still, in some persons, low HDL-cholesterol levels can occur in the absence of other lipoprotein abnormalities. These persons are said to have *isolated low HDL.* They are not common in the general population, however; more often, low HDL cholesterol occurs as a component of the lipid triad. Because of the common occurrence of the lipid triad, the relation of the lipid triad as a whole to CHD risk will be considered, and whether the entire triad is a target for therapy.

1) Atherogenic dyslipidemia as a "risk factor"

The lipid triad occurs commonly in persons with premature CHD (Austin et al., 1990; Austin et al., 1988), hence the designation *atherogenic lipoprotein phenotype* or *atherogenic*

dyslipidemia. Typical characteristics of persons with atherogenic dyslipidemia are obesity, abdominal obesity, insulin resistance, and physical inactivity (National Institutes of Health 1998a,b). Many persons with type 2 diabetes have atherogenic dyslipidemia (Verges 1999; Durrington 1999; Kreisberg 1998*)*. In epidemiological studies in high-risk populations, the contributions of individual components of atherogenic dyslipidemia to CHD risk cannot reliably be dissected from the sum of lipid risk factors. Although there is evidence that each component of the lipid triad—low HDL, small LDL, and remnant lipoproteins—is individually atherogenic, the relative quantitative contribution of each cannot be determined. For this reason, it is reasonable to view the lipid triad as a whole as a "risk factor."

2) Atherogenic dyslipidemia as a target of therapy

Most therapies that lower triglyceride or raise HDL cholesterol actually modify all of the components of the lipid triad. Weight reduction in overweight and obese subjects favorably modifies atherogenic dyslipidemia (National Institutes of Health 1998a,b); so does increased physical activity (Kokkinos and Fernhall, 1999). Among lipid-lowering drugs, fibrates and nicotinic acid specifically improve all of the elements of the lipid triad (Guyton et al., 2000; Zema 2000; Martin-Jadraque et al., 1996; Vega and Grundy, 1994). Therefore, in considering clinical trial evidence of benefit from therapeutic modification of atherogenic dyslipidemia, all therapeutic responses together rather than individual responses in individual lipoprotein species likely determine efficacy. Although attempts have been made to dissect apart the contributions of changes in individual lipoprotein species, the conclusions are always dubious. Tables II.3–3 and II.3–4 summarize the results of clinical trials in which drugs that modify atherogenic dyslipidemia—fibrates and nicotinic acid—were used. Table II.3–3 shows results of primary prevention trials, whereas Table II.3–4 summarizes secondary prevention trials. The trials taken as a whole show a strong trend towards reduction in CHD risk through therapeutic modification of atherogenic dyslipidemia.

Table II.3–3. Primary Prevention Clinical Trials with CHD Endpoints Using Drugs that Modify Triglyceride-Rich Lipoproteins

Primary prevention

Trial/Drug/ Duration of Intervention	Number of Subjects	Baseline or Placebo Lipid and Lipoprotein Values and On-Treatment Lipid and Lipoprotein in Drug Treatment Group					Percent change coronary event rate (Drug vs. Placebo Groups)
		Group	TC (mg/dL)	TG (mg/dL)	Non-HDL-C (mg/dL)	HDL-C (mg/dL)	
WHO trial* Clofibrate 5 yrs	15,745 men lipids from Edinburgh (Subsets: n = 4935)	Placebo	257	210	—	—	-20% (p=0.05)
		On-Treatment	229	160	—	—	
Helsinki Heart Study† Gemfibrozil 5 yrs	4,081 men	Baseline	289	175	242	47	-34% (p<0.02)
		On-Treatment	247	115	196	51	

Abbreviations: TC = total cholesterol; TG = triglycerides; non-HDL-C = non-HDL cholesterol; HDL-C = HDL cholesterol.

* Committee of Principal Investigators 1978.

† Frick et al., 1987.

Table II.3–4. Secondary Prevention Clinical Trials with CHD Endpoints Using Drugs that Modify Triglyceride-Rich Lipoproteins

Trial/Drug/ Duration of Intervention	Number of Subjects	Baseline or Placebo Lipid and Lipoprotein Values and On-Treatment Lipid and Lipoprotein in the Drug-Treatment Group					% Change in Coronary Event Rate (Drug vs. Placebo Groups)
		Group	TC (mg/dL)	TG (mg/dL)	Non-HDL-C (mg/dL)	HDL-C (mg/dL)	
Coronary Drug Project* Clofibrate 5 yrs	1,103 men on Clofibrate Treatment vs. 2,789 placebo	Baseline	250	177	—	—	-5% (ns)
		On-Treatment	234	149	—	—	
Coronary Drug Project* Nicotinic acid 5 yrs	1,119 Rx men; 2,789 placebo	Baseline	250	177	—	—	-22% p<0.05
		On-Treatment	226	143	—	—	
Newcastle Trial† Clofibrate 5 yrs	400 men	Baseline	245	337	—	—	-49% p<0.01
		On-Treatment	217	215	—	—	
	97 women	Baseline	270	—	—	—	
		On-Treatment	229	—	—	—	
Scottish Trial‡ Clofibrate 6 yrs	593 men	Baseline	264	—	—	—	-44% (ns)
		On-Treatment	229	—	—	—	
	124 women	Baseline	280	—	—	—	
		On-Treatment	228	—	—	—	
Stockholm Study¥ Clofibrate+ Nicotinic acid 5 yrs	219 men 60 women lipoproteins on subset	Baseline	251	208	203	48	-36% p<0.01
		On-Treatment	218	166	—	—	
VA-HIT trial§ Gemfibrozil 5 yrs	2,531 men	Baseline	175	161	143	32	-22% p<0.006
		On-Treatment	170	115	136	34	
BIP£ Bezafibrate 6 yrs	2,825 men 265 women	Baseline	212	145	177	35	-9.4% p = 0.26
		On-Treatment	202	115	161	41	

* Coronary Drug Project Research Group 1975.

† Group of Physicians of the Newcastle-upon-Tyne Region 1971.

‡ Research Committee of the Scottish Society of Physicians.

¥ Carlson and Rosenhamer 1988.

§ Rubins et al., 1999.

£ Bizafibrate Infarction Prevention Study 2000.

In addition to the end-point trials shown in Tables II.3–3 and II.3–4, three trials of fibrate therapy have been carried out in which the end-points are coronary atherosclerosis as assessed by angiography. The results of these trials are summarized in Table II.3–5. They show that fibrate therapy on average causes a reduction in minimum lesion diameter of coronary arteries, without appreciably reducing LDL cholesterol.

Table II.3–5. Clinical Trials with Angiographic Endpoints Using Drugs that Modify Triglyceride-Rich Lipoproteins in Persons with Established Coronary Disease or CHD Equivalent

Trial/Drug/ Duration of intervention	N	Baseline and Rx Lipid and Lipoprotein Values					Mean change, minimum lesion diameter (mm)*
		Group	Total Chol	TG	LDL	HDL	
BECAIT[†] Bezafibrate 600 mg 5 yr	92 men; 80% had mixed dyslipidemia	Baseline	266	216	180	34	-0.17 placebo -0.06 bezafibrate p<0.05
		On-Treatment	229	159	173	37	
LOCAT[‡] Gemfibrozil 1200mg 2–3 yr	395 men with Low HDL, all s/p CABG	Baseline	199	146	139	31	-0.04 placebo -0.01 gemfibrozil p=0.009
		On-Treatment	186	92	130	38	
DAIS[¥] Fenofibrate	305 men 113 women with Type 2 Diabetes	Baseline	216	214	133	40	-0.06 placebo -0.01 fenofibrate p<0.029
		On-Treatment	~194	~154	~125	~43	

* Lower numbers signify less progression of lesions.

† Ericsson et al., 1996.

‡ Frick et al., 1997.

¥ DAIS Investigators 2001.

Finally, two trials of combined drug therapy have assessed changes in coronary lumen diameter; in these trials, one drug was an LDL-lowering drug and another targeted atherogenic dyslipidemia (Table II.3–6). In both, drug therapy produced favorable changes in coronary lesions.

Table II.3–6. Treatment of Atherogenic Dyslipidemia with Drugs in Combination with LDL-Lowering Sequestrants or Statins

Trial/Drug/ Duration of intervention	N	Baseline and Rx Lipid and Lipoprotein Values in Drug Group					Mean change, minimum lesion diameter (mm)*
		Group	Total Chol	TG	LDL	HDL	
CLAS† Niacin 3–12g + colestipol 30g 2 yrs	162 male nonsmokers s/p CABG	Baseline	246	151	171	45	-0.06 placebo +0.02N+C p<0.01
		On-Treatment	180	110	97	61	
FATS‡ Niacin 4–6g + colestipol 30g 2 yrs	146 men with CAD and high Apo B levels	Baseline	270	194	190	39	-0.05 usual care +0.04N+C p=0.005
		On-Treatment	209	137	129	55	
HATS¥ Niacin 2–4 g + Simvastatin 10–20 mg	160 (24 women, 136 men) with CAD, low HDL, normal LDL	Baseline	201	213	125	31	-0.14 -0.01 p<0.001
		On-Treatment	139	126	75	40	

* Positive numbers indicate net regression, compared to negative numbers which denote progression of lesions. N = niacin; C = colestipol.

† Blankenhorn et al., 1987.

‡ Brown et al., 1990.

¥ Brown BG et al., 2000.

Taken together, these various clinical trials support a beneficial effect of drugs that favorably modify atherogenic dyslipidemia on coronary lesions and major coronary events.

Evidence statements: *Atherogenic dyslipidemia commonly occurs in persons with premature CHD (C1). Moreover, atherogenic dyslipidemia strongly associates with abdominal obesity, obesity, and physical inactivity (C1). Weight reduction and increased physical activity will mitigate atherogenic dyslipidemia (A1).*

Recommendation: *For management of atherogenic dyslipidemia, emphasis in management should be given to life-habit modification—weight control and increased physical activity.*

Evidence statement: *Drugs that modify atherogenic dyslipidemia yield a moderate reduction in CHD risk (A2, B2).*

Recommendation: *Consideration should be given to treatment of atherogenic dyslipidemia with specific drug therapy, i.e., fibrates or nicotinic acid, in higher risk persons.*

4. Nonlipid risk factors

A number of nonlipid risk factors are associated with increased CHD risk and must be considered in preventive efforts. Some of these factors are modifiable and are appropriate targets for intervention efforts in themselves (Table II.4–1). Several fixed risk factors cannot be modified; their presence signals the need for more intensive lowering of LDL cholesterol. ATP I/II and other guidelines have advocated adjusting the intensity of LDL-cholesterol therapy in the primary prevention setting according to the absolute risk for CHD. In addition, emerging risk factors promise to provide new insights into the atherosclerotic process and potentially refine risk assessment. Certainly not all of coronary risk can be explained by the major independent risk factors. Other risk factors, some of which are yet to be identified, undoubtedly influence risk independently of the major risk factors. Some of these other factors contributing to CHD risk include the life-habit risk factors (obesity, physical inactivity, and atherogenic diet), emerging risk factors, male sex, and genetic/racial/ethnic characteristics. This section will review the established nonlipid risk factors including the life-habit risk factors. The emerging risk factors are reviewed in Section II.5. The influence of racial/ethnic characteristics on risk are discussed in more detail in Section IX.

Table II.4–1. Nonlipid Risk Factors for CHD

Modifiable Risk Factors	Nonmodifiable Risk Factors
Hypertension*	Age*
Cigarette Smoking*	Male Sex*
Thrombogenic/hemostatic state†	Family History of Premature CHD*
Diabetes‡	
Obesity	
Physical inactivity	
Atherogenic diet	

* Risk factors that are included in the ATP III CHD risk assessment algorithm.

† This risk factor is inferred from observations that antiplatelet drugs and anticoagulants have been shown to reduce risk for CHD.

‡ Modification of blood pressure and lipids in people with diabetes has been shown to reduce CHD risk. Clinical trials of improved glucose control show a trend to CHD risk reduction, but not a statistically significant reduction.

A first aim for people with modifiable nonlipid risk factors is to alter them to reduce CHD risk. Risk reduction therapies consist of smoking cessation, control of hypertension, weight reduction, increased physical activity, and improved nutrition. Control of diabetic hyperglycemia will prevent microvascular complications, although clinical trials have not unequivocally demonstrated that improved glucose control lowers CHD events. Modification of blood pressure and lipids in people with diabetes, however, does reduce CHD risk (see discussion below). In addition, the recommendations for cholesterol management operationally take selected factors into account by setting lower thresholds for initiating treatment and lower goal levels for LDL cholesterol for those at higher risk (Table II.4–2). A low HDL cholesterol (<40 mg/dL) also counts as a major risk factor for setting lower LDL goals, whereas a higher HDL cholesterol

(≥60 mg/dL) takes away one other risk factor. Evidence relating the nonlipid risk factors to CHD is summarized below (Sections II.4.a and II.4.b).

Table II.4–2.

Primary Prevention: Risk Status Based on Presence of CHD Risk Factors Other Than LDL Cholesterol
Positive Risk Factors
1. Age
Male: ≥45 years
Female: ≥55 years
2. Family history of premature CHD (definite myocardial infarction or sudden death before 55 years of age in father or other male first-degree relative, or before 65 years of age in mother or other female first-degree relative)
3. Current cigarette smoking
4. Hypertension (≥140/90 mmHg,* or on antihypertensive medication)
5. Low HDL cholesterol (<40 mg/dL*)
Negative (protective) Risk Factor†
6. High HDL cholesterol (≥60 mg/dL)

High risk, defined as a net of two or more CHD risk factors, leads to more vigorous intervention in primary prevention. Age (defined differently for men and for women) is treated as a risk factor because rates of CHD are higher in the older than in the young, and in men than in women of the same age. Obesity is not listed as a risk factor because it operates through other risk factors that are included (hypertension, hyperlipidemia, and decreased HDL cholesterol, as well as diabetes mellitus, which is treated as a CHD equivalent—see section II.12.b), but it should be considered a target for intervention. Physical inactivity is not listed as a risk factor to modify treatment goals for LDL cholesterol, but it too should be considered a target for intervention, and physical activity is recommended as desirable for everyone. High risk due to CHD or its equivalents is addressed directly in the algorithm.

* Confirmed by measurements on several occasions.

† If the HDL-cholesterol level is ≥60 mg/dL, subtract one risk factor (because high HDL-cholesterol levels decrease CHD risk).

a. Modifiable risk factors

1) Hypertension

The Sixth Report of the Joint National Committee on Prevention, Detection, Evaluation, and Treatment of High Blood Pressure (JNC VI 1997; Joint National Committee . . . 1997) defines categorical hypertension as a blood pressure ≥140 mmHg systolic or ≥90 mmHg diastolic or current use of antihypertensive treatment. Numerous observational studies have demonstrated unequivocally a powerful association of high blood pressure with risk for CHD (MacMahon 1990; Selmer 1992; Stamler 1993; Staessen 1993; Franklin 1999; van den Hoogen 2000). This association holds for men and women and younger and older persons. Even below categorical hypertension, subjects with high-normal blood pressure (130–139 mmHg systolic and/or 85–89 mmHg diastolic) are at increased risk for CHD compared with those with optimal values (Rodgers and MacMahon, 1999; Vasan et al., 1999). Clinical trials have established that blood pressure reduction in people with hypertension reduces risk for a variety of blood pressure-related endpoints including CHD (Cutler 1995). This is true even for older people with isolated

systolic hypertension (SHEP Cooperative Research Group 1991; Staessen et al., 1997). Following the approach taken in ATP II (National Cholesterol Education Program 1993; 1994), JNC VI (JNC VI; Joint National Committee . . . 1997) employed the level of blood pressure and the concomitant presence of risk factors, coexisting cardiovascular disease (CVD), or evidence of target-organ damage to classify blood pressure severity and to guide treatment. Hypertension and high serum cholesterol often occur concomitantly (Working Group . . . 1991; Meigs et al., 1997). Approaches to their joint management are considered in more detail under section VII.6.

***Evidence statements**: Hypertension is a major, independent risk factor for CHD (A2, B1, C1). Treatment of hypertension does not remove all of the CHD risk accompanying elevated blood pressure (A2, B1).*
***Recommendation:** Elevated blood pressure is a risk factor that should modify goals of LDL-lowering therapy in primary prevention (Table II.4–2). Treated hypertension should also count as a risk factor for setting goals of LDL cholesterol in primary prevention. Hypertension should be treated in all affected people according to JNC guidelines.*

2) Cigarette smoking

Cigarette smoking has been established as a powerful contributor to risk for CHD and other forms of CVD (Doll and Peto, 1976; Doll et al., 1980; Kannel et al., 1986; Colditz et al., 1988; Wolf et al., 1988; Government Printing Office 1989; U.S. Surgeon General 1989; Willet 1987; LaCroix 1991; McBride 1992; Jonas et al., 1992; Pyörälä et al., 1994). The relationship of smoking to CVD risk is dose dependent and observed in men and women. Observational data suggest that smoking cessation reduces the risk for CVD events and that the decline in risk begins within months after quitting (U.S. Surgeon General 1990). Randomized clinical trials of smoking cessation in primary prevention settings have revealed substantial reductions in risk for cardiac events in those who quit (Hjermann et al., 1981; Rose et al., 1982; Multiple Risk Factor Intervention Trial Research Group 1982). Cigarette smoking features prominently in the risk assessment component of ATP III because of the CVD risks associated with it and the substantial benefits to be derived from smoking cessation. Moreover, smokers benefit as much, if not more, from LDL-lowering therapy as do nonsmokers (Table II.2–3).

***Evidence statements:** Cigarette smoking is a strong, independent risk factor for CHD (C1). Smoking cessation is accompanied by a reduction in CHD risk (C1).*
***Recommendation:** Prevention of smoking and smoking cessation should receive prime emphasis in the clinical strategy to reduce CHD risk.*

3) Diabetes

Diabetes is defined as a fasting blood glucose of 126 mg/dL or greater (Gavin et al., 1998). Risk for all forms of CVD, including CHD is increased substantially with type 1 and type 2 diabetes mellitus (Kannel and McGee, 1979a,b; Wingard and Barrett-Connor, 1995; Pyörälä et al., 1987; Bierman 1992). Furthermore, the mortality rate in diabetic subjects who have experienced CHD

is much higher than in non-diabetic subjects (Abbott et al., 1988; Herlitz et al., 1992; Miettinen et al., 1998). The increase in risk attributed to hyperglycemia per se is independent of the overweight/obesity and dyslipidemia commonly observed in persons with diabetes. Tighter glycemic control reduces risk for microvascular complications of diabetes such as renal impairment and retinopathy (Diabetes Control and Complications Trial Research Group 1993; The UK Prospective Diabetes Study Group 1998a,c). Thus far, however, improved glucose control in diabetic people has not been definitively shown to reduce macrovascular disease (CHD), although a trend toward benefit has been observed (Diabetes Control and Complications Trial Research Group 1993; The UK Prospective Diabetes Study Group 1998a,c). Importantly, management of other risk factors effectively reduces the incidence of major coronary events in persons with diabetes. This has been shown for tight blood pressure control (the UK Prospective Diabetes Study Group 1998b,d). Analyses of diabetic subgroups within large placebo-controlled trials of cholesterol- and triglyceride-lowering therapy have indicated that the benefits of treatment are comparable among diabetics and non-diabetics (Pyörälä et al., 1997; Haffner et al., 1999a; Goldberg et al., 1998; The Long-Term Intervention with Pravastatin in Ischaemic Disease (LIPID) Study Group 1998; Downs et al., 1998; Hoogwerf et al., 1999b; Koskinen et al., 1992; Rubins et al., 1999) (see also Table II.2–3).

A growing body of literature reveals that higher-risk people with diabetes carry an absolute risk for major coronary events similar to that of non-diabetic people with established CHD (Haffner et al., 1998, 2000; Malmberg et al., 2000; Hu et al., 2000). Although some populations with diabetes do not reach this risk level (Simons and Simons, 1998), the very high morbidity and mortality after onset of CHD makes it appropriate to place most people with diabetes in a separate category of risk (see Section II.12.b).

Evidence statements: *Diabetes is a major, independent risk factor for CHD and other forms of CVD (B1). Reducing cholesterol levels in people with diabetes reduces risk for CHD (see Section II.12.b).*
Recommendation: *The presence of diabetes should modify treatment goals for LDL cholesterol. Because of growing evidence that many people with diabetes carry a risk for CHD similar to that of people with established CHD, diabetes should be removed from the list of other risk factors that modify LDL-cholesterol goals. Instead, diabetes should be treated as a separate category of higher risk (see Section II.12.b).*

4) Overweight/obesity

An estimated 97 million adults in the United States are overweight or obese (National Institutes of Health 1998a,b). *Obesity* is defined as a body mass index (weight in kg divided by the square of height in meters) of $\geq$30 kg/m^2 and *overweight* as 25–29.9 kg/m^2 (National Institutes of Health 1998a,b). Although some people classified as overweight actually have a large muscle mass, most persons with BMIs of 25 to 29.9 kg/m^2 have excess body fat. Overweight and obesity not only predispose to CHD, stroke, and numerous other conditions, they also are associated with a greater all-cause mortality (Hubert et al., 1983; Wilcosky et al., 1990; Manson et al., 1990; Calle et al., 1999). People who are overweight or obese have a high burden of other CHD risk factors including dyslipidemia (high LDL cholesterol, low HDL cholesterol, and high VLDL and

triglycerides) (Olefsky et al., 1974; Grundy et al., 1979; Garrison et al., 1980; Denke et al., 1993; 1994), type 2 diabetes (Hartz et al., 1983; Stern and Haffner, 1986) and hypertension (Berchtold et al., 1981a,b; Blair et al., 1984). Obese individuals who do not yet have these risk factors are at increased risk for developing them. The Framingham Heart Study confirms that obesity is strongly predictive of CHD. Risk for CVD is particularly raised when abdominal obesity is present; *abdominal obesity is defined* by a waist circumference greater than 102 cm (40 inches) in men or 88 cm (35 inches) in women (National Institutes of Health 1998a,b).

Despite the strong association between various indicators of obesity and risk for CHD, ATP III does not list obesity among the risk factors that modify the treatment goals for LDL cholesterol. Much of the risk associated with overweight and obesity appears to be mediated through the major risk factors. The independent component of risk has not been quantified. Furthermore, the prevalence of overweight and obesity in the U.S. population is so high that counting them as risk factors to modify LDL goals would enormously expand the population having multiple risk factors, causing an even greater increase in usage of LDL-lowering drugs than will result from the intensified management of persons with multiple risk factors outlined in ATP III. Instead, ATP III identifies overweight and obesity as direct targets of weight-reduction intervention; this approach will achieve more overall risk reduction than will LDL lowering without an emphasis on weight control.

Evidence statement: *Obesity is a major, modifiable risk factor for CHD (C1). Nevertheless, the incremental risk imparted by obesity independently of accompanying risk factors is uncertain.*
Recommendation: *Obesity should be considered a direct target for clinical intervention rather than an indicator for lipid-modifying drug treatment. Because of the association of obesity with other risk factors, obesity should not be included as a factor influencing treatment goals of LDL cholesterol in primary prevention.*

5) Physical inactivity

Physical inactivity is associated with increased risk for CHD. Conversely, physical activity favorably modifies several risk factors; it has been reported to lower LDL and triglyceride levels, raise HDL cholesterol, improve insulin sensitivity, and lower blood pressure (Blair et al., 1983; King and Kriska, 1992; Helmrich et al., 1991; Haskell et al., 1994). Evidence that physical activity can reduce risk for CHD comes from multiple observational studies (Leon et al., 1987; Ekelund et al., 1988; Blair et al., 1989; Morris et al., 1990; Sandvik et al., 1993; Paffenbarger et al., 1993). Therefore, physical inactivity is widely designated to be a major risk factor for CHD (National Cholesterol Education Program 1993; 1994; Fletcher et al., 1996; U.S. Department of Health and Human Services. Physical activity and health . . . 1996). In ATP III, physical inactivity also is listed as a major modifiable risk factor. The mechanisms whereby physical inactivity raises risk for CHD are not fully understood and are probably multifactorial. Physical inactivity reduces caloric expenditure and probably contributes to obesity and to its associated lipid and nonlipid risk factors (Grundy et al., 1999a), as well as to insulin resistance (Perseghin et al., 1996). Beyond its effects on standard risk factors, physical inactivity may have adverse effects on cardiovascular fitness and function. Many of the adverse effects of a sedentary

lifestyle that raise CHD risk can be inferred from the actions of increased physical activity, which include reduction in insulin resistance, lowering of blood pressure, reducing serum triglycerides, raising HDL cholesterol, and improving cardiovascular risk (U.S. Department of Health and Human Services. Physical activity and health . . . 1996).

Although ATP III specifies physical inactivity as a major modifiable risk factor, it does not list it as a risk factor that modifies LDL-cholesterol goals. Because of the collinearity of physical inactivity with other independent risk factors, there is some confounding between physical inactivity and the risk factors that modify LDL goals. Nonetheless, physical inactivity is designated as a major target of intervention for therapeutic lifestyle changes. Undoubtedly some of the benefit of increased physical activity is mediated through mechanisms other than the measured risk factors. In addition, after setting LDL-cholesterol goals with standard risk factors, a physician can take into account a person's levels of physical activity and fitness when adjusting the intensity of LDL-lowering therapy.

It has been suggested that a history of regular physical activity should count as a "negative risk factor," similarly to high HDL cholesterol. Although regular physical activity undoubtedly reduces baseline risk for CHD and should be encouraged, ATP III does not specifically count it as a negative risk factor for setting the goal level for LDL cholesterol.

Evidence statements: *Physical inactivity is a major, modifiable risk factor for CHD (C1). However, a portion of the increased risk for CHD accompanying physical inactivity can be explained by associated major risk factors (C2). Regardless of mechanism, increased physical activity will reduce risk for CHD (B2, C1).*
Recommendations: *Physical inactivity should be a direct target for clinical intervention. Increased physical activity in accord with a person's overall health status should be encouraged as part of lifestyle therapies to reduce risk for CHD. Patients undergoing clinical cholesterol management should be provided with guidance for safe forms of physical activity that will reduce CHD risk beyond LDL-lowering therapy.* *A history of physical inactivity should not be counted as a risk factor for setting goals for LDL cholesterol in primary prevention. However, clinical judgment can be used to decide whether to intensify LDL-lowering therapy in physically inactive persons, or to reduce intensity of therapy in physically active persons.*

6) Atherogenic diet

Prospective studies in populations show that dietary patterns modify the baseline risk of populations (U.S. Department of Agriculture . . . 2000; Krauss et al., 2000). In high-risk populations, some of the adverse effects of diet composition undoubtedly relate to established risk factors, e.g., effects of high intakes of saturated fatty acids and cholesterol on LDL-cholesterol levels and of high salt intakes on blood pressure. Moreover, dietary patterns appear to influence baseline risk beyond the known risk factors. For example, populations that consume diets high in fruits, vegetables, whole grains, and unsaturated fatty acids appear to be at a lower baseline risk than can be explained by standard risk factors. The particular nutrients that impart

this lower risk have not been adequately defined, but strong candidates include antioxidant nutrients, folic acid, other B-vitamins, omega-3 fatty acids, and other micronutrients (Krauss et al., 2000).

Evidence statements: *An atherogenic diet is a major, modifiable risk factor for CHD (C1). High intakes of saturated fatty acids and cholesterol directly raise LDL-cholesterol concentrations (see Section V.5). Further, certain dietary patterns appear to modify baseline risk for CHD, independently of effects on LDL cholesterol (see Sections V.1, V.4, and V.5.c).*
Recommendation: *Modification of an atherogenic diet should be employed to reduce CHD risk as part of overall therapeutic lifestyle changes for CHD risk reduction (see Section V). However, consumption of an atherogenic diet should not be included among risk factors to modify LDL-cholesterol goals in primary prevention.*

b. Nonmodifiable risk factors

1) Age

Risk for coronary disease increases steeply with advancing age in men and women. At any given level of LDL cholesterol, risk for CHD is higher in older than in younger people (Wilson et al., 1998). The principal reason that risk rises with age is that age is a reflection of the progressive accumulation of coronary atherosclerosis, which in turn reflects the cumulative exposure to atherogenic risk factors, both known and unknown. On average, older persons have more coronary atherosclerosis than do younger persons. Once atherosclerosis develops, the coronary plaque itself becomes a "risk factor" for development of clinical CHD. This is because plaque ruptures produce acute coronary events (unstable angina or myocardial infarction), or when plaques grow large, coronary obstructive symptoms (angina pectoris) occur. Recent clinical trials indicate that older persons benefit from LDL-lowering therapy similarly to middle-aged individuals (Table II.2–3).

Evidence statement: *Advancing age is a major, independent risk factor for CHD (C1).*
Recommendation: *Age should count as a risk factor to modify LDL-cholesterol goals in primary prevention.*

2) Male sex

The rise in absolute risk with aging becomes most clinically significant in men in their mid-forties and in women about the time of the menopause. At any given age men are at greater risk for coronary disease than are women (Wilson et al., 1998). Risk in women lags about 10 to 15 years behind that of men. The reasons for a gender difference in CHD risk are not fully understood. Part of the difference can be explained by the earlier onset of risk factors in men, e.g., elevations of LDL cholesterol and blood pressure, and lower HDL cholesterol. However, the Framingham Heart Study has shown that the differences in absolute risk between the sexes

cannot be explained entirely by standard risk factors. Nonetheless, women respond to LDL-lowering therapy with a reduction in relative risk similarly to men (Table II.2–3).

Evidence statement: *Men have a higher baseline risk for CHD than do women at all ages, except perhaps in the oldest age group (>80 years) (C1).*
Recommendation: *An age cutpoint at which age becomes a risk factor to modify goals for LDL cholesterol should be set lower in men (≥45 years) than in women (≥55 years) in primary prevention (Table II.4–2).*

3) Family history of premature CHD

CHD tends to cluster in families, and a positive family history of premature CHD counts as a risk factor. Several prospective studies (Barrett-Connor and Khaw, 1984; Shea et al., 1984; Conroy et al., 1985; Hopkins et al., 1988; Hunt et al., 1986; Jorde and Williams, 1988; Colditz et al., 1991; Kekalainen et al., 1996; Eaton et al., 1996; Pankow et al., 1997; Bensen et al., 1999; Li et al., 2000; Williams et al., 2001) indicate that a family history of premature CHD is an *independent* risk factor even when other risk factors are taken into account. Relative risk for CHD in first-degree relatives has been reported to range from two to as high as 12 times that of the general population (Slack 1969a; Phillips et al., 1974; Rissanen 1979). Risk increases with the number of primary relatives affected and at younger ages of onset in the probands (Pohjola-Sintonen et al., 1998; Rissanen et al., 1977). The clustering of CHD risk in families most closely resembles diseases of polygenic origin and does not follow a Mendelian recessive or dominant pattern that suggests a single gene locus (Siegmund et al., 1998). Among primary relatives, it appears that siblings of probands have the highest relative risk, probably due to shared sociocultural environment, exposures, and genetics. Many prospective cohort and case-control investigations, including the recent Atherosclerosis Risk In Communities Study (ARIC) in four U.S. communities, show this risk to be independent of known risk factors (Bensen et al., 1999; Sharrett et al., 1999). Many risk factors are under genetic control (e.g., blood pressure, lipids and lipoproteins, Lp(a), and obesity), but they account for only a portion of the aggregation of CHD seen in families (Snowden et al., 1982; Khaw and Barrett-Connor, 1986). While family history is immutable, a large number of modifiable risk factors are found in people with a history of premature CHD in a first degree relative (Becker et al., 1988; 1998). This has been demonstrated in both genders and in most races. The Framingham Heart Study family history analysis does not demonstrate sufficient incremental risk for family history to be included in risk assessment equations. Nonetheless, a body of compelling case-control and cohort studies has found family history to be independently associated with higher risk status. The variance across studies depends on the way in which family history is assessed. In the National Heart, Lung, and Blood Institute (NHLBI) Family Heart Study and in the Newcastle Family History Study, self-report of a family history of premature CHD in a first degree relative has been found to be reasonably accurate with sensitivity above 80 percent and specificity about 90 percent (Silberberg et al., 1998a,b; Bensen et al., 1999).

Evidence statements: *A positive family history for CHD in a first-degree relative (parent, sibling, or offspring) is a major risk factor for CHD. Often a positive family history is associated with a high prevalence of modifiable risk factors (C1); however, a positive family history carries excess risk beyond standard measurements of risk factors (C1). Risk for CHD is higher the younger the age of onset in the affected family member and the greater the number of affected first degree relatives (C1).*
Recommendation: *The presence and age of onset of CHD in all first-degree relatives should be assessed. The family history should be considered positive for premature CHD if clinical CHD or sudden death can be documented in first degree male relatives 55 years of age and younger and in first degree female relatives 65 years of age or younger. Because a positive family history of premature CHD is immutable but bears information about the risk for CHD and the probability of having modifiable risk factors, it should serve as a factor in making treatment decisions relative to setting and reaching LDL-cholesterol goals in primary prevention (Table II.4–2).*

5. Emerging risk factors

The major risk factors listed in Table II.4–2, along with elevated LDL cholesterol, are powerfully associated with the development of CHD. Although several of them are directly atherogenic, their power to predict CHD is still limited. Most of the *excess risk* for CHD can be explained by the major risk factors; this is shown by the very low risk in persons who have optimal levels of all of these risk factors (see Primary Prevention [Section II.7]). Nonetheless, when major risk factors are present, they account for only about half of the *variability* in CHD risk in the U.S. population; other factors, yet to be identified, seemingly influence how much the major risk factors affect absolute CHD risk. Consequently there has been intensive research to identify new risk factors that will enhance predictive power in individuals. These newer factors can be called *emerging risk factors.* For present purposes, these can be conveniently divided into three categories: lipid risk factors, nonlipid risk factors, and subclinical atherosclerotic disease (see below).

To determine the clinical significance of the emerging risk factors, they must be evaluated against the following criteria used to identify the major risk factors:

- Significant predictive power that is independent of the other major risk factors
- A relatively high prevalence in the population (justifying routine measurement in risk assessment)
- Laboratory or clinical measurement must be widely available, well standardized, inexpensive, have accepted population-reference values, and be relatively stable biologically
- Preferably, but not necessarily, modification of the risk factor in clinical trials will have shown reduction in risk

In the discussion to follow, the *emerging risk factors* are evaluated against these criteria. Even when a factor does not qualify as a major risk factor for routine measurement, its association

with CHD risk deserves some consideration. A review of the key literature is required to determine whether the putative risk factor deserves to be elevated to the level of a major risk factor, and if not, whether it can still be used in selected persons as an adjunct to risk assessment. Even if neither is the case, the risk factor often remains a direct target of therapy, unrelated to modifying LDL-cholesterol goals. If the emerging risk factor is a lipid parameter, its treatment will be considered in more detail elsewhere in this report. If it is a nonlipid risk factor, the reader will be referred to other sources for information on therapy.

A foundation of ATP III is that the major risk factors define absolute risk and thereby modify LDL-cholesterol goals. An initial assessment of risk is made on the basis of these risk factors before any consideration is given to whether emerging risk factors should influence goals or therapies. The same reasoning holds for underlying risk factors: obesity, physical inactivity, and atherogenic diet. On the other hand, ATP III does not discount the influence of underlying or emerging risk factors. *They can be taken into consideration according to clinical judgment as optional modifiers of therapy, but they should be used only as an adjunct to adjust the estimate of absolute risk status obtained with the major risk factors.*

a. Emerging lipid risk factors

1) Triglycerides

Elevated serum triglycerides have long been considered a risk factor by some investigators. The status of triglycerides as a risk predictor is reviewed in other sections of this report (Sections II.3.a and VII). Two questions about triglycerides persist: (a) whether they constitute an independent risk factor for CHD and (b) whether they should be a direct target for therapy. Although recent data point to some independence in risk prediction, their close association with other lipid risk factors (remnant lipoproteins, small LDL, low HDL cholesterol) and nonlipid risk factors makes the issue of their "independence" open to considerable question. In this report, elevated triglycerides are viewed as a marker for other lipid and nonlipid risk factors that themselves raise risk; however, elevated triglycerides per se are not designated a major risk factor to modify goals for LDL cholesterol. Nonetheless, ATP III gives increased weight to elevated triglycerides in cholesterol management in two ways: (a) as a marker for atherogenic remnant lipoproteins and (b) as a marker for other lipid and nonlipid risk factors in the metabolic syndrome (see Section II.6). The former leads to non-HDL cholesterol as a secondary target of therapy when triglycerides are high, whereas the latter calls for more intensive lifestyle therapies (see Section V).

2) Lipoprotein remnants

Many lines of evidence point to the atherogenic potential of lipoprotein remnants (see Section II.3.a.2). Although no single finding confirms remnant lipoproteins as an independent risk factor, circumstantial evidence is strong. Lipoproteins called beta-VLDL, which are apolipoprotein E-enriched remnants and are typical of dysbetalipoproteinemia, almost certainly are atherogenic, because dysbetalipoproteinemia is accompanied by increased risk for CHD (see Section VII). High serum levels of lipoproteins enriched in apolipoprotein CIII, another form of VLDL remnants, appear to be atherogenic as well (Hodis et al., 1994; Koren et al., 1996; Alaupovic et al., 1997; Thompson 1998; Sacks et al., 2000a). Several assays are available for

identification and measurement of remnant lipoproteins; these include ultracentrifugation, electrophoresis, and immunological techniques. Remnant-like particles (RLP) measured immunologically appear to be a promising risk predictor (Leary et al., 1998; McNamara et al., 1998; Devaraj et al., 1998; Masuoka et al., 2000). Even so, prospective studies relating various remnant measures to CHD risk are limited, and measurement with specific assays cannot be recommended for routine practice. Nonetheless, as discussed earlier (see Section II.3.a), ATP III identifies elevated VLDL cholesterol as the surrogate for elevated atherogenic remnants in persons with triglycerides ≥200 mg/dL.

3) Lipoprotein (a)

Several studies (Moliterno et al., 1993; Stubbs et al., 1998; Budde et al., 1994; Seman et al., 1999) report a strong association between Lp(a) levels and CHD risk. Indeed, a recent meta-analysis of reported prospective studies supports an independent predictive power for elevated Lp(a) (Danesh et al., 2000). In addition, concomitant elevations of Lp(a) and LDL cholesterol have been reported to have synergy in elevating risk in both men and women with hypercholesterolemia. On the basis of these studies, some authorities hold that an elevation of Lp(a) is an independent risk factor for CHD. It must be noted nonetheless that several prospective studies (Moliterno et al., 1995; Nishino et al., 2000) do not confirm independent prediction. Of note, Lp(a) levels are higher in African Americans than in Caucasians, but an increased risk for CHD associated with higher Lp(a) levels in African Americans has not been documented (Moliterno et al., 1995). Thus, the quantitative contribution of elevated Lp(a) to CHD risk beyond the major risk factors is uncertain. This uncertainty extends both to individuals and populations; in the latter, the frequency of elevated Lp(a) is not as high as for the major risk factors.

Moreover, issues related to measurement of Lp(a) in clinical practice have not been fully resolved (Marcovina and Koschinsky, 1998; Marcovina et al., 1999). Measurement of Lp(a) is made by immunological methods, and standardized methods are available only in a few reference laboratories. Population reference levels are available from these laboratories, but they are not widely available in clinical practice. Accurate methodology has not yet been established in most clinical chemistry laboratories; samples generally must be sent to special laboratories for measurement. As a result, extra expense in measurement is required. Serum Lp(a) is relatively resistant to therapeutic lowering. Statin drugs are ineffective. Among currently available drugs, only nicotinic acid reduces Lp(a) concentrations, and only moderately (Carlson et al., 1989; Angelin 1997). In postmenopausal women, estrogen therapy also causes some reduction in Lp(a) concentrations (Su et al., 1998). Although these therapies typically lower elevated Lp(a) levels, they have not been widely adopted. At present no clinical trial evidence supports a benefit from lowering Lp(a) levels with particular agents.

Despite limitations in measurement and therapy, some authorities believe that Lp(a) measurement is a useful addition to the major risk factors for identifying persons at still higher risk than revealed by those factors. According to advocates for Lp(a), the option of measurement is best reserved for persons with a strong family history of premature CHD or those with genetic causes of hypercholesterolemia, such as familial hypercholesterolemia (Marcovina and Koschinsky, 1998; Marcovina et al., 1999). An elevated Lp(a) thus presents the option to raise a person's risk to a higher level. For example, if a person has a high LDL cholesterol and only one

other risk factor, the finding of a high Lp(a) could count as a second risk factor to justify a lower goal for LDL cholesterol. ATP III did not find strong evidence to support this approach, but accepts it as an option for selected persons.

4) Small LDL particles

One component of atherogenic dyslipidemia is small LDL particles. They are formed in large part, although not exclusively, as a response to elevations of triglycerides. Their presence is associated with an increased risk for CHD (Austin et al., 1990; Miller et al., 1996; Gardner et al., 1996); however, the extent to which they predict CHD independently of other risk factors is unresolved (Mykkanen et al., 1999). Moreover, standard and inexpensive methodologies are not available for their measurement. For these reasons, ATP III does not recommend measurement of small LDL particles in routine practice. If the clinical decision is made to detect and measure small LDL, their presence is best used as an indicator for atherogenic dyslipidemia and the metabolic syndrome. Their elevation also supports intensified therapeutic lifestyle changes. If small LDL particles accompany elevated triglycerides or low HDL cholesterol in high-risk persons, consideration can be given to using nicotinic acid or fibric acid as components of lipid-lowering therapy. Nonetheless, LDL cholesterol remains the primary target of treatment in persons with small LDL particles.

5) HDL subspecies

HDL comprises several components and subfractions that also have been related to CHD risk. While HDL cholesterol is the risk indicator most often used, HDL subfractions (LpAI and LpAI/AII and/or HDL_3 and HDL_2) have also been used for risk prediction. Although small studies suggest greater predictive power of one or another HDL component, their superiority over HDL cholesterol has not been demonstrated in large, prospective studies. Moreover, measures of HDL subspecies are not readily available in clinical practice. Consequently, ATP III does not recommend the routine measurement of HDL subspecies in CHD risk assessment.

6) Apolipoproteins

a) Apolipoprotein B

Apolipoprotein B is a potential marker for all atherogenic lipoproteins. It has been proposed as an alternative to LDL cholesterol as a risk factor (see Section II.3.b). Limited epidemiological and clinical trial evidence supports its superiority over LDL cholesterol in risk prediction (Rader et al., 1994; Bloch and Couderc, 1998). Nonetheless, the body of evidence in favor of apolipoprotein B has not been developed sufficiently to justify replacing LDL cholesterol, which itself is a powerful independent predictor of CHD (see Section II.2). In addition, from the viewpoint of ATP III, the question is whether apolipoprotein B is preferred as a target of therapy, not as a factor in risk assessment. Although LDL cholesterol and apolipoprotein B are highly correlated in persons with normal triglyceride levels, the apolipoprotein B level typically is disproportionately higher in persons with hypertriglyceridemia. ATP III takes this difference into account and sets a secondary target, non-HDL cholesterol, in persons with hypertriglyceridemia. Non-HDL cholesterol is significantly correlated with apolipoprotein B and can serve as a "surrogate" for it. The non-HDL-cholesterol measure is readily available in clinical practice,

whereas standardized apolipoprotein B measures are not widely available, and in any case, would add expense beyond routine lipoprotein analysis.

b) Apolipoprotein AI

Apolipoprotein AI is carried in HDL, and it is usually low when HDL is reduced. A low apolipoprotein AI thus is associated with increased risk for CHD, but not independently of low HDL. Whether it has independent predictive power beyond HDL cholesterol is uncertain. In any case, standardized methodology for estimating apolipoprotein AI is not widely available. Its measurement thus is not recommended for routine risk assessment in ATP III.

7) Total cholesterol/HDL-cholesterol ratio

Many studies show that the total cholesterol/HDL-cholesterol ratio is a powerful predictor of CHD risk. Some investigators (Hong et al., 1991; Castelli et al., 1992; Kinosian et al., 1995; Criqui and Golomb, 1998) propose that this "cholesterol ratio" is a simple approach for lipid risk assessment. This ratio reflects two powerful components of risk. A high total cholesterol is a marker for atherogenic lipoproteins, whereas a low HDL cholesterol correlates with the multiple risk factors of the metabolic syndrome and probably imparts some independent risk. In fact, however, the total cholesterol/HDL-cholesterol ratio is subsumed in the Framingham global risk equations that are the basis of the 10-year risk assessment used in ATP III. In this way, ATP III incorporates cholesterol ratios into risk assessment. If risk assessment is done using Framingham risk factors as continuous variables (e.g., by risk equations), then the ratio is essentially incorporated. If risk assessment is made using total cholesterol and HDL cholesterol in graded, incremental steps (see Section III), then the ratio is applied approximately. Regardless, ATP III does not define the total cholesterol/HDL-cholesterol ratio as a specified lipid target of therapy. Instead, LDL cholesterol is retained as the primary target of lipid-lowering therapy. Nor is the total cholesterol/HDL-cholesterol ratio recommended as a secondary target of therapy. Treatment of ratios will divert priority from specific lipoprotein fractions as targets of therapy.

b. Emerging nonlipid risk factors

1) Homocysteine

Elevations of serum homocysteine are positively correlated with risk for CHD (Kang et al., 1992; Refsum et al., 1998; Boushey et al., 1995; Malinow et al., 1999; Stehouwer et al., 1998; Folsom et al., 1998; Whincup et al., 1999; Bostom et al., 1999; Giles et al., 2000). The mechanism of the link between homocysteine and CHD is not well understood, although persons with inherited forms of severe homocysteinemia have premature vascular injury and atherosclerosis. In any case, the strength of association between homocysteine and CHD is not as great as that for the major risk factors. Moreover, an elevation of homocysteine is not as common as that of the major risk factors. For these reasons, ATP III does not list elevated homocysteine as a major risk factor to modify LDL-cholesterol goals.

Even though elevated homocyteine is not classified as a major risk factor, some investigators hold that the association with CHD is strong enough to make it a direct target of therapy. The available intervention for elevated homocysteine is dietary folic acid, perhaps combined with

other B vitamins (B6 and B12) (Malinow et al., 1999). Measurement of homocysteine is an option favored by some authorities, with the aim of treating with supplemental B vitamins. Others, however, contend that measurement of homocysteine adds little to risk reduction provided that persons are consuming recommended dietary allowances of folic acid. Several clinical trials are underway to test whether homocysteine lowering will reduce CHD risk (Clark and Collins, 1998). It had been predicted that the recent institution of folate fortification of foods would reduce average levels of homocysteine in the U.S. population (Tucker et al., 1996a,b). Recent data show that this has occurred (Jacques et al., 1999). Substantial increases in serum folate in young women have also been documented (Centers for Disease Control and Prevention 2000).

ATP III does not recommend routine measurement of homocysteine as part of risk assessment to modify LDL-cholesterol goals for primary prevention. This lack of recommendation is based on uncertainty about the strength of the relation between homocysteine and CHD, a lack of clinical trials showing that supplemental B vitamins will reduce risk for CHD, and the relatively low prevalence of elevated homocysteine in the U.S. population. Measurement of homocysteine nonetheless remains an option in selected cases, e.g., with a strong family history of premature CHD in an otherwise low-risk patient. If elevated, the clinical approach favored by ATP III is to determine vitamin B12 level and, if this is normal, to ensure adequate folate intake rather than modifying the LDL-cholesterol goal.

2) Thrombogenic/hemostatic factors

Thrombosis plays a key role in acute coronary syndromes, including myocardial infarction (Fuster and Lewis, 1994). Both platelets and coagulation factors are involved in the thrombotic process. Although the precise hemostatic or prothrombotic mechanisms that predispose to myocardial infarction have not been worked out, the evidence that aspirin and other antiplatelet therapy can reduce risk is compelling and suggests a role for platelet hyperaggregability (Hennekens et al., 1997; Creager 1998; Hansson et al., 1998). Another hemostatic factor associated with CHD risk is fibrinogen (Ernst 1994; Meade 1995; Kannel 1997; Montalescot et al., 1998). A high fibrinogen level associates significantly with increased risk for coronary events, independent of cholesterol level; and conversely, a low fibrinogen level indicates a reduced risk, even in the presence of high total cholesterol levels. Other hemostatic factors that have been found to be associated with increased coronary risk include activated factor VII, plasminogen activator inhibitor-1 (PAI-1), tissue plasminogen activator (tPA), von Willebrand factor, factor V Leiden, protein C, and antithrombin III. Studies have shown that some of these prothrombotic factors are elevated as a component of the metabolic syndrome.

ATP III does not recommend measurement of prothrombotic factors as part of routine assessment of CHD risk. The strength of the association between any of these factors and CHD risk has not been defined. Specific therapeutic interventions, other than aspirin or warfarin therapy, are not available in clinical practice. Clinical trials have not been carried out that target specific prothrombotic factors. Laboratory measurements for prothrombotic factors are not widely available, nor have they been standardized. This said, it is worth noting that the metabolic syndrome is often accompanied by a prothrombotic state, and life-habit intervention to reverse the metabolic syndrome reduces serum levels of prothrombotic factors.

3) Inflammatory markers

The increasing recognition that atherosclerosis involves a chronic inflammatory process has brought greater attention to arterial "inflammation" as a risk factor for major coronary events. In fact, recent reports indicate that serum inflammatory markers, such as C-reactive protein (CRP), carry predictive power for coronary events (Tracy et al., 1997a; Ridker et al., 1998a,b; 1999; 2000; Koenig et al., 1999). High sensitivity (hs) CRP appears to be the most reliable inflammatory marker available at present. Cigarette smoking, which apparently promotes arterial inflammation and predisposes to major coronary events, is associated with higher levels of CRP (Tracy et al., 1997b). Because of the growing evidence that inflammation within coronary plaques predisposes to plaque rupture, one theory holds that an elevation of hs-CRP reflects the presence of "unstable" plaques. The recent observations that obesity and the metabolic syndrome are commonly accompanied by increases in CRP also suggest a close link between metabolic derangement and inflammation (Visser et al., 1999; Ford 1999; Cook et al., 2000). Although adverse metabolism could activate immune mechanisms and predispose to major coronary events, some investigations suggest that chronic, low-grade infections of the arterial wall accelerate atherogenesis and lead to CHD. Infectious agents that have been implicated are Chlamydia pneumoniae and cytomegalovirus.

ATP III does not recommend routine measurement of inflammatory markers for the purpose of modifying LDL-cholesterol goals in primary prevention. A growing body of literature nonetheless suggests that inflammatory markers such as hs-CRP carry some independent predictive power beyond lipid risk factors (Ridker et al., 2000). The extent to which they provide extra prediction beyond all the major risk factors combined is uncertain. Nonetheless, in the opinion of some investigators (Ridker et al., 2000), in persons with elevated hs-CRP, consideration can be given to more aggressively lowering LDL-cholesterol levels than indicated by the goals set by the major risk factors in ATP III.

4) Impaired fasting glucose

A common metabolic abnormality in the metabolic syndrome is an impaired fasting glucose (glucose 100–125 mg/dL). According to the Framingham Heart Study, the association between elevated plasma glucose and CHD risk is a continuous variable; some investigators thus view impaired fasting glucose to be an independent risk factor (Meigs et al., 1998; 2000). However, to other researchers, the strong association between impaired fasting glucose and other risk factors of the metabolic syndrome casts doubt on the independent predictive power of impaired fasting glucose (Fontbonne and Eschwege, 1991; Haffner 1997; Laakso and Lehto, 1998; Gerstein et al., 1999). Moreover, at present, impaired fasting glucose cannot be considered a direct target for drug therapy, although weight reduction and increased physical activity will often correct it. Thus, ATP III identifies impaired fasting glucose as one component of the metabolic syndrome that signifies the need for more intensive lifestyle therapies, i.e., weight reduction and increased physical activity. However, its presence does not place a person in the same high-risk category as does overt diabetes; neither does it count as a risk factor to modify the LDL-cholesterol goal.

c. Subclinical atherosclerotic disease

A large body of data indicates that persons with advanced subclinical coronary atherosclerosis are at greater risk for major coronary events than are persons with less severe atherosclerosis. Although the precise relationship between subclinical atherosclerotic disease and CHD risk has not been defined, subclinical disease must be classified as an emerging risk factor. The American Heart Association recently held a conference (Prevention Conference V) to assess the current status of subclinical atherosclerosis as a predictor of major coronary events (Smith et al., 2000a,b; Grundy et al., 2000; Greenland et al., 2000). The major findings of this report represent current understanding of the predictive power of subclinical disease. The conclusions of the Prevention Conference V report are represented in the position of ATP III on subclinical atherosclerotic disease.

1) Ankle-brachial blood pressure index (ABI)

The ABI is a simple, inexpensive, noninvasive test to confirm the clinical suspicion of lower extremity peripheral arterial disease (PAD). It is performed by measuring the systolic blood pressure (by Doppler probe) in brachial, posterior tibial, and dorsalis pedis arteries. An ABI of <0.9, found in either leg, is diagnostic of PAD, and prospective studies indicate that risk for major coronary events is in the range of that of persons with established CHD (Criqui et al., 1985; Criqui et al., 1992). The test is most likely to be positive in persons over age 50 who have other risk factors. A strong case can be made that a positive ABI essentially constitutes a *diagnosis* of PAD. Consequently the ABI can be considered a diagnostic test to identify persons at high risk for CHD (see Section II.12.a).

2) Tests for myocardial ischemia

Tests available in this category include standardized exercise electrocardiogram (ECG) testing, myocardial perfusion imaging, and stress echocardiography. Exercise ECG testing has been extensively studied. A positive exercise ECG in asymptomatic, middle-aged men with traditional risk factors carries independent predictive power for major coronary events; thus, exercise testing carries the potential to identify middle-aged men who are at higher risk than revealed by the major risk factors. Consequently a positive test could call for more aggressive risk-reduction therapies. The same predictive power apparently does not hold for young adults and middle-aged or older women; a “positive” test is much less predictive of major coronary events. In these groups, the likelihood of inappropriate application of aggressive preventive measures is increased. Myocardial perfusion imaging and stress echocardiography have been less extensively evaluated for their predictive power, although they appear to contain independent prognostic information. Certainly a positive perfusion imaging result obtained in middle-aged men with multiple risk factors and men ≥45 years with a strong family history of CHD is strongly indicative of obstructive coronary atherosclerosis and carries a high risk for acute coronary syndromes. The decision to employ perfusion imaging in appropriately selected persons depends on clinical judgment. The expense of the test and its low yield of positive outcomes makes it unsuitable for routine risk assessment in asymptomatic persons, but does not exclude its clinical utility in selected persons. In ATP III, the presence of myocardial ischemia appropriately identified by stress testing qualifies as a diagnosis of CHD.

3) Tests for atherosclerotic plaque burden

a) Carotid intimal medial thickening

One test in this category is *carotid sonography* used to measure intimal medial thickness (IMT) of the carotid arteries (Greenland et al., 2000). The extent of carotid atherosclerosis correlates positively with the severity of coronary atherosclerosis. Furthermore, recent studies show that severity of IMT independently correlates with risk for major coronary events (Chambless et al., 1997; Hodis et al., 1998; O'Leary et al., 1999; Greenland et al., 2000). Thus, measurement of carotid IMT theoretically could be used as an adjunct in CHD risk assessment. For instance, the finding of an elevated carotid IMT (e.g., 75th percentile for age and sex) could elevate a person with multiple risk factors to a higher risk category. However, its expense, lack of availability, and difficulties with standardization preclude a current recommendation for its use in routine risk assessment for the purpose of modifying intensity of LDL-lowering therapy. Even so, if carried out under proper conditions, carotid IMT could be used to identify persons at higher risk than that revealed by the major risk factors alone.

b) Coronary calcium

Another indication of subclinical coronary atherosclerosis is coronary calcium as detected by *electron beam computed tomography (EBCT)* or *spiral CT.* Amounts of coronary calcium correlate positively with coronary plaque burden. Therefore, a high coronary calcium score should carry predictive power for major coronary events (Smith et al., 2000a; Greenland et al., 2000). Several studies indicate that, in persons with multiple risk factors, a concomitantly high coronary calcium score places persons in the range of a CHD risk equivalent (Detrano et al., 1999; Raggi et al., 2000; Arad et al., 2000; Wong et al., 2000; O'Malley et al., 2000). A recent report by the American College of Cardiology/American Heart Association (ACC/AHA) acknowledged the potential power of coronary calcium to predict major coronary events (O'Rourke et al., 2000a,b). At the same time, this report emphasized the limitations of the technique as a tool to diagnose obstructive coronary disease for the purpose of coronary revascularization. Despite these limitations, both the Prevention V report and the ACC/AHA report affirmed that use of EBCT for risk prediction can be an option, provided its use is limited to patients referred by physicians. Under these circumstances, when used appropriately, measurement of coronary calcium could be of value for persons whose absolute risk is greater than that revealed by the major risk factors. Thus, a high coronary calcium score in a patient with multiple risk factors is consistent with a still higher risk state.

In accord with recent reports (Smith et al., 2000b; O'Rourke et al., 2000a,b), ATP III does not recommend EBCT for indiscriminate screening for coronary calcium in asymptomatic persons, particularly in persons without multiple risk factors. Its predictive power for persons without multiple risk factors has not been determined in prospective studies. Testing is relatively expensive and not widely available. It should be used primarily as an adjunct to modify risk assessment based on the major risk factors. Only in exceptional cases should it evoke further invasive diagnostic tests and interventions. Despite uncertainties as to the predictive power of coronary calcium, ATP III supports the conclusions of AHA's Prevention Conference V and the ACC/AHA report that high coronary calcium scores signify and confirm increased risk for CHD when persons have multiple risk factors. Therefore, measurement of coronary calcium is an

option for advanced risk assessment in appropriately selected persons, provided the test is ordered by a physician who is familiar with the strengths and weaknesses of noninvasive testing. In persons with multiple risk factors, high coronary calcium scores (e.g., >75th percentile for age and sex) denotes advanced coronary atherosclerosis and provides a rationale for intensified LDL-lowering therapy. Moreover, measurement of coronary calcium is promising for older persons in whom the traditional risk factors lose some of their predictive power (Grundy et al., 1999b). For example, a high coronary calcium score could be used to tip the balance in favor of a decision to introduce LDL-lowering drugs for primary prevention in older persons.

6. Metabolic syndrome

a. Metabolic syndrome as multiple, interrelated factors that raise risk

This syndrome has become increasingly common in the United States. It is characterized by a constellation of metabolic risk factors in one individual (Reaven 1995; Grundy 1999a; Meigs 2000). The root causes of the metabolic syndrome are overweight/obesity, physical inactivity, and genetic factors. The metabolic syndrome is closely associated with a generalized metabolic disorder called *insulin resistance*, in which tissue responsiveness to the normal action of insulin is impaired (Kolaczynski and Caro, 1998; Zimmet et al., 1999; Haffner 1999*).* Some individuals are genetically predisposed to insulin resistance; in these persons, acquired factors (excess body fat and physical inactivity) elicit insulin resistance and the metabolic syndrome. Most persons with insulin resistance have abdominal obesity (Despres 1993; Despres 1998; Bjorntorp 1997). The mechanistic connections between insulin resistance and metabolic risk factors are not fully understood and appear to be complex. Various risk factors have been included in the metabolic syndrome; the following list contains those factors that are generally accepted as being characteristic of this syndrome:

- Abdominal obesity
- Atherogenic dyslipidemia
- Raised blood pressure
- Insulin resistance ± glucose intolerance
- Prothrombotic state
- Proinflammatory state

Because of the high degree of association of these risk factors in persons with the metabolic syndrome, it has proven difficult to dissect the individual contributions of each factor to CHD risk. However, there is little doubt that this syndrome taken in aggregate enhances the risk for CHD at any given LDL-cholesterol level. From a population viewpoint, the increasing prevalence of the metabolic syndrome threatens to partially reverse the reduction in CHD risk that has resulted from a decline in serum LDL cholesterol levels in the U.S. population, which has occurred over the past three decades. The metabolic syndrome and its associated risk factors have emerged as a coequal partner to cigarette smoking as contributors to premature CHD (Wilson 1998; Assmann et al., 1998b; Eckel and Krauss, 2000; National Institutes of Health 1998a,b; U.S. Department of Health and Human Services. Physical activity and health . . . 1996). In addition, the insulin resistance accompanying the metabolic syndrome is one of the underlying

causes of type 2 diabetes (Groop 1999; Cavaghan et al., 2000). For these reasons, ATP III places increased emphasis on the metabolic syndrome as a risk enhancer.

There are two general approaches to the treatment of the metabolic syndrome. The first strategy modifies root causes, overweight/obesity and physical inactivity, and their closely associated condition, insulin resistance. Weight reduction (Dengel et al., 1998; Ahmad et al., 1997; Su et al., 1995) and increased physical activity (Devlin 1992; Perseghin et al., 1996) both lower insulin resistance and indirectly mitigate the metabolic risk factors. The second approach directly treats the metabolic risk factors—atherogenic dyslipidemia, hypertension, the prothrombotic state, and underlying insulin resistance. At present, most success in clinical practice comes from pharmacological modification of the associated risk factors. However, the greatest potential for management of the syndrome lies in reversing its root causes. ATP III promotes this latter approach, which is a major new initiative for persons entering clinical cholesterol management.

Evidence statements*: The presence of the metabolic syndrome accentuates the risk accompanying elevated LDL cholesterol (C1). This increase in risk appears to be mediated through multiple risk factors—major and emerging risk factors (C1).* *Clinical trials show that modifying three major components of the metabolic syndrome—atherogenic dyslipidemia (B2), hypertension (A2, B1)*[*]*, and the prothrombotic state (A2, B1*[†]*)—will reduce risk for CHD.*
Recommendations*: Increased emphasis should be placed on therapeutic modification of the metabolic syndrome in persons undergoing LDL-lowering therapy. Primary management of the metabolic syndrome should be to reverse its root causes—overweight/obesity and physical inactivity. In addition, other lipid and nonlipid risk factors associated with the metabolic syndrome should be appropriately treated.* *The presence of the metabolic syndrome provides the option to intensify LDL-lowering therapy after LDL-cholesterol goals are set with the major risk factors. Primary emphasis nonetheless should be given to modifying the underlying risk factors (overweight/obesity and physical inactivity) and other risk factors associated with the metabolic syndrome.*

* See JNC VI. (JNC VI 1997; Joint National Committee . . . 1997).

† See results of meta-analysis of aspirin trials.

b. Diagnosis of metabolic syndrome

There are no well-accepted criteria for the diagnosis of the metabolic syndrome. Nonetheless, many persons seen in clinical practice are readily recognized as having multiple metabolic risk factors. Most persons with the metabolic syndrome are overweight or obese; clinical studies have noted a high correlation between abdominal obesity and the risk factors characteristic of the metabolic syndrome (Bjorntorp 1997; Despres 1993; Okosun et al., 2000; Bjorntorp 1992). For example, closely associated with abdominal obesity is an elevation of serum triglycerides (Mekki et al., 1999; Bodkin et al., 1993; Julien et al., 1997). The elevation can be either borderline high (150–199 mg/dL) or high (≥200 mg/dL). A higher triglyceride level is usually accompanied by lower HDL-cholesterol concentrations (Phillips et al., 1981; Schaefer et al., 1988). HDL-

cholesterol levels <40 mg/dL occur commonly in men with insulin resistance (Karhapaa et al., 1994). Further, moderate (marginal) reductions of HDL-cholesterol levels are observed commonly in women with the syndrome (Nilsson et al., 2000; Vanhala et al., 1997); thus for women, HDL cholesterol <50 mg/dL counts as one indicator in the diagnosis of the metabolic syndrome. A moderately strong association exists between insulin resistance and hypertension (Lind et al., 1995; Lender et al., 1997; Landsberg 1999). Insulin resistance also is associated with high-normal blood pressure (Dyer et al., 1999; Falkner et al., 1999).

Impaired fasting glucose (110–125 mg/dL) usually is an indicator of insulin resistance and is frequently accompanied by other metabolic risk factors (Tripathy et al., 2000; Haffner et al., 1996); measurement of fasting glucose in overweight and obese persons is a reasonable option (National Institutes of Health 1998a,b). A portion of persons with impaired fasting glucose will eventually develop type 2 diabetes (Edelstein et al., 1997; Lindahl et al., 1999), which further enhances risk for CHD. Type 2 diabetes is the epitome of the metabolic syndrome. Other components of the metabolic syndrome (insulin resistance, proinflammatory state, and prothrombotic state) cannot be identified by routine clinical evaluation. However, in the presence of abdominal obesity, they often are present. For present purposes, the metabolic syndrome is identified by the presence of three or more of the components listed in the following table.

Table II.6–1. Clinical Identification of the Metabolic Syndrome*

Risk Factor	Defining Level
Abdominal Obesity Men Women	Waist Circumference† >102 cm (>40 in) >88 cm (>35 in)
Triglycerides	≥150 mg/dL
HDL cholesterol Men Women	 <40 mg/dL <50 mg/dL
Blood pressure	≥130/85 mmHg
Fasting glucose	110–125 mg/dL

* The ATP III panel did not find adequate evidence to recommend routine measurement of insulin resistance (e.g., plasma insulin), proinflammatory state (e.g., high-sensitivity C-reactive protein), or prothrombotic state (e.g., fibrinogen or PAI-1) in the diagnosis of the metabolic syndrome.

† Some male persons can develop multiple metabolic risk factors when the waist circumference is only marginally increased, e.g., 94–102 cm (37–39 in). Such persons may have a strong genetic contribution to insulin resistance. They should benefit from changes in life habits, similarly to men with categorical increases in waist circumference.

c. Metabolic syndrome as a target of therapy

In persons entering clinical management of elevated LDL cholesterol, the full benefit of risk reduction will be lost if the metabolic syndrome is ignored. To achieve maximal benefit from modification of multiple metabolic risk factors, the underlying insulin resistant state must become a target of therapy. The safest, most effective, and preferred means to reduce insulin resistance is weight reduction in overweight and obese persons and increased physical activity. Both weight control (Dengel et al., 1998; Ahmad et al., 1997; Su et al., 1995) and exercise

(Devlin 1992; Perseghin et al., 1996; Hu et al., 2001; Farrell et al., 1998) reduce insulin resistance and favorably modify the metabolic risk factors. ATP III thus places increased emphasis on the metabolic syndrome and on its favorable modification through changes in life habits.

Drug treatment of several of the individual risk factors of the metabolic syndrome will reduce risk for CHD. The strong trend for benefit of drug treatment of atherogenic dyslipidemia is discussed in Section II.3. Risk reductions by lowering blood pressure with antihypertensive drugs (JNC VI 1997; Joint National Committee . . . 1997) and treating the prothrombotic state with aspirin (Hennekens et al., 1997) are well established. However, lowering serum glucose with drugs has not yet been documented to reduce risk for CHD. Although drugs are available to reduce insulin resistance, there is no clear evidence yet that they will reduce risk for CHD in persons with the metabolic syndrome.

7. Primary prevention: persons without established CHD

a. Scope of primary prevention

Primary prevention aims to prevent new onset CHD. If prevention is delayed until advanced coronary atherosclerosis has developed, the U.S. public will continue to suffer from a heavy burden of CHD. The essential approach to primary prevention is to reduce risk factors for CHD. Waiting until a diagnosis of CHD is made before beginning risk factor reduction will miss the opportunity to prevent CHD in people whose first presentation is sudden cardiac death or disability (deVreede-Swagemakers et al., 1997; Kannel 1985b; Muller et al., 1997; American Heart Association 1998). One-third of people who experience a myocardial infarction will die within 24 hours and many survivors will have serious morbidity including congestive heart failure, angina, arrhythmias, and an increased risk of sudden death (American Heart Association 1998). One-third of all new cardiovascular events occurs in individuals under age 65 (AHA Heart Facts, 1999). These observations argue strongly for primary prevention of CHD.

Elevations of serum LDL cholesterol contribute importantly to the high prevalence of CHD in the United States. International studies find that CHD is uncommon in cultures with low levels of serum cholesterol even when the prevalence of hypertension and cigarette smoking is relatively high (Keys 1980; Grundy et al., 1990; Tunstall-Pedoe et al., 1994). Migration studies reveal that persons who emigrate from low-risk to high-risk cultures show a rise in LDL-cholesterol levels and assume the risk of the new culture (Marmot et al., 1975). Mass elevations of serum LDL cholesterol result from the habitual diet in the United States**,** particularly diets high in saturated fats and cholesterol (Keys et al., 1980; Blackburn 1990; Krauss et al., 1996; 2000; U.S. Department of Agriculture . . . 2000). When these diets are combined with a relatively heavy burden of other CHD risk factors, a high prevalence of premature CHD results.

b. Clinical strategy in primary prevention effort

NCEP supports two complementary approaches to primary prevention: (1) population strategies and (2) clinical strategies (National Cholesterol Education Program 1990; Report of the Expert Panel on Population Strategies . . . 1991). NCEP encourages dietary and other behavioral

interventions for all Americans to reduce the population burden of atherosclerosis. The clinician has the opportunity to bridge the gap between the public health population strategy and clinical primary prevention. The population approach is augmented when physicians reinforce the public health message (see Section V). The clinical approach is needed to identify higher risk persons in whom risk factor modification is more urgently required. It further extends to the identification of relatives of affected persons who also are at higher risk and who need clinical intervention to modify risk factors.

c. Concepts of short-term and long-term prevention

Clinical primary prevention can be categorized into long-term and short-term prevention. Long-term prevention aims to reduce risk for CHD over a lifetime; its goal is to prevent the initiation and progression of coronary atherosclerosis, the underlying cause of CHD. It is directed towards persons who are not in imminent danger of suffering a major coronary event, but instead have a high probability of developing CHD sometime during their lives. Lifetime prevention places priority on modifying adverse life habits that are the underlying causes of risk factors and coronary atherosclerosis. In some persons, however, when risk factors are categorically abnormal drug therapy is required in addition to life-habit changes to reduce long-term risk.

Short-term prevention is designed to reduce risk for new onset CHD, mostly acute coronary syndromes, over the next few years (e.g., ≤10 years). It is directed towards persons who in all probability already have advanced coronary atherosclerosis and who are at high risk of suffering acute coronary syndromes. Such higher risk persons deserve more intensive intervention. Modification of life habits remains an important component of risk reduction in the short term, but more persons will require the addition of pharmacological therapy to reduce risk factors than in long-term prevention.

d. Role of LDL lowering in short-term and long-term primary prevention

Several general comments can be made about the role of LDL lowering in short-term and long-term prevention before addressing specific issues in these areas. A broad base of evidence indicates that elevations in LDL cholesterol are a direct cause of atherosclerosis. Long-term elevations of LDL cholesterol lead to a progressive accumulation of coronary atherosclerosis, which is essential to development of clinical CHD. Recent clinical trials demonstrate that LDL-lowering therapy reduces CHD risk in both primary and secondary prevention. In fact, LDL lowering reduces risk even when LDL-cholesterol levels are not categorically high. For this reason, LDL-lowering therapy represents a powerful modality for reducing both short-term and long-term risk.

Persons at higher risk in the short term (i.e., ≤10 years) deserve highest priority in clinical intervention. Identification of higher risk persons thus becomes a critical issue. This identification is based largely on algorithms that take into account the interaction of multiple risk factors that raises CHD risk multiplicatively. These short-term risk estimates are less reliable for selection of candidates for long-term prevention in clinical practice. Long-term prevention begins with a fundamental principle: all categorical risk factors should be managed clinically regardless of projected short-term risk. All of the major risk factors for CHD—cigarette

smoking, hypertension, elevated LDL cholesterol, and diabetes—can produce CHD or other cardiovascular disease even in the absence of other risk factors. Each deserves clinical intervention. In the case of LDL cholesterol, a categorical elevation for ATP III is defined as a level ≥160 mg/dL. Many persons with persistent levels of LDL cholesterol in this range will ultimately require LDL-lowering drugs to reduce risk, although therapeutic lifestyle changes are first-line management. For persons with LDL-cholesterol levels ≥160 mg/dL, categorization of absolute risk can help guide the type and intensity of therapy. Furthermore, some persons with lower levels of LDL cholesterol, e.g., 130–159 mg/dL, will nonetheless have a short-term risk high enough to justify LDL-lowering drugs because of other risk factors. Absolute risk assessment will assist in identification of the latter persons.

e. Risk assessment in primary prevention

In accord with the preceding comments, clinical risk assessment has two goals: to identify persons who are at risk for accelerated atherogenesis, and to identify those persons who are at higher risk for experiencing an acute coronary syndrome because of established advanced atherosclerosis. Long-term prevention in clinical practice is designed for the former, whereas short-term prevention is intended for the latter. Short-term risk reduction (i.e., prevention of coronary plaque rupture and acute coronary syndromes) depends almost exclusively on absolute-risk assessment for its selection of persons for intense clinical intervention. For short-term prevention, absolute risk can be estimated by the summed interaction of multiple coronary risk factors.

NCEP originally introduced a simple system of risk assessment that employed counting of categorical risk factors (Table II.4–2). Treatment goals for LDL cholesterol were set according to the number of risk factors. This system represented a blending of the concepts of relative and absolute risk in an effort to effectively institute both long-term and short-term prevention. The major intervention in NCEP recommendations has been lifestyle changes; LDL-lowering drugs were reserved for persons with categorical elevations of LDL cholesterol who were projected to be at highest risk. After release of ATP II, several major clinical trials reported results showing the efficacy and safety of LDL-lowering drugs for primary prevention (as well as for secondary prevention). These reports opened the door to wider use of LDL-lowering drugs, both for short-term and long-term prevention. In particular, there is a growing consensus that higher risk persons should not be denied the proven short-term benefits of LDL-lowering drugs, even when LDL-cholesterol levels are <160 mg/dL. Consequently, the selection of persons for short-term prevention to reduce plaque rupture and acute coronary syndromes has assumed increased importance. Moreover, there has been a growing view that a more quantitative assessment of short-term risk is required for the selection of persons who will benefit most from intensive risk-reduction intervention.

The Framingham Heart Study provides an algorithm for assessing risk for CHD in the short term (≤10 years) (Wilson et al., 1998). This algorithm, which is based on robust risk factors, has been adopted by European cardiovascular societies for their treatment guidelines (Prevention of coronary heart disease in clinical practice, 1998; Wood et al., 1998), the British cardiovascular societies (Joint British recommendations 1998; 2000; Faergeman 1999) and the American Heart Association (Grundy et al., 1999c). In 1999, the National Heart, Lung, and Blood Institute

sponsored a workshop to evaluate the applicability of Framingham risk scores to other population groups in the United States (Grundy et al., 2001a). Framingham projections for "hard" CHD (myocardial infarction and CHD deaths) were found to be similar to those found in other prospective studies in both Caucasian and African American populations in the United States. Comparisons also showed that Framingham scoring led to some overestimation of absolute risk in certain population groups, e.g., Japanese men in Hawaii (Honolulu Heart Program) and Hispanic persons in Puerto Rico (Grundy et al., 2001a). Nonetheless the broad "transportability" of Framingham risk scores within the U.S. population makes it possible for ATP III to employ the Framingham algorithm for quantitative risk assessment to assist in matching intensity of therapy with absolute risk. It must be noted, however, that other published risk assessment algorithms are available (Cullen et al., 1998). All algorithms do not contain the same factors, nor are risk predictions entirely congruent. Moreover, Framingham scoring itself has been undergoing modification over the past few years. Therefore, absolute risk estimation must be viewed as an evolving science. This is particularly the case as emerging risk factors and measures of subclinical atherosclerosis are added to risk assessment algorithms.

The ATP III panel was faced with the need to reconcile its previous method of counting risk factors with the developing field of integrated, "global" risk assessment. There are advantages and disadvantages to each approach. For example, risk factor counting provides continuity with previous ATP guidelines; it allows for a history of detected risk factors to be included in risk assessment; it includes family history of premature CHD; and it provides a focus on the individual risk factors, each of which requires clinical intervention. However, risk factor counting alone also has disadvantages: it does not provide a quantitative estimate of absolute risk in the short term; it does not allow for variability in risk factor level or intensity (i.e., it uses only categorical risk factors); and it may underestimate the progressive impact of advancing age on absolute risk in older persons. Integrated models of risk estimation (e.g., Framingham risk scoring) counter several of these disadvantages. For instance, they give a more quantitative absolute risk prediction for short-term risk; they account for variability in risk factor intensity, including the progressive impact of advancing age on risk; and they can include corrections for the interactions of risk factors. Even so, there are disadvantages or potential disadvantages to quantitative models for risk estimation: they introduce an approach that has not been widely field tested for practicality in clinical practice; they do not account for variability of risk factor level from one clinic visit to another (and no historical information on variable risk factors is included); they require extra steps in risk assessment (either manual or computer-based assessment); they tend to focus primary attention on short-term risk (to the exclusion of long-term risk); their transportability to all populations is uncertain; and there are remaining uncertainties due to competing and evolving risk-assessment models. All of these factors were taken into account in the ATP III choice of risk assessment methods.

The final method chosen attempts to capitalize on the advantages of both approaches. Risk factor counting is retained for initial assessment, but Framingham risk scoring, updated for ATP III (see Section III), is layered over risk factor counting to improve risk estimation for refining decisions about goals, intensity, and types of LDL-lowering therapy in persons with multiple risk factors. In the final analysis, however, ATP III risk assessment allows physicians to begin with either approach; ultimately the two give similar results. The method of risk assessment therefore depends on physician preference. These methods are described in detail in Section III.

f. Primary prevention with lifestyle changes

1) Basis for lifestyle recommendations for primary prevention

A broad base of evidence supports recommendations for lifestyle changes for LDL-lowering therapy in primary prevention.

2) Dietary clinical trials of cholesterol lowering

A sizable number of clinical trials have been carried out to test whether lowering serum cholesterol levels with dietary modification will reduce risk for CHD. Some of these were primary prevention trials (Dayton et al., 1968; Frantz et al., 1989; Miettinen et al., 1972; Hjermann et al., 1981; Multiple Risk Factor Intervention Trial 1976), and others were secondary prevention trials (Ball et al., 1965; Research Committee 1965; Leren 1966). None of these trials provided convincing proof of the efficacy of serum cholesterol lowering by dietary means to reduce CHD risk. Most of the trials, however, showed positive trends. In a meta-analysis of dietary trials, Gordon (1995a,b; 1999) found that dietary lowering of serum cholesterol produces as much CHD risk reduction as do drugs, commensurate with their respective degree of cholesterol lowering.

3) Linkage of public health approach and clinical approach in primary prevention

A strong case exists for the efficacy and safety of primary prevention through lifestyle changes. Primary prevention efforts extend to both public health and clinical arenas. The essential changes in life habits include smoking avoidance or cessation, modifying intakes of foods and nutrients, weight control, and physical activity. Evidence to support each of these changes has been presented in the NCEP Population Report (National Cholesterol Education Program 1990; Report of the Expert Panel on Population Strategies . . . 1991), U.S. Surgeon General's reports on Smoking (U.S. Surgeon General 1990) and on Physical Activity (U.S. Department of Health and Human Services 1996b); the Obesity Clinical Guidelines Report (National Institutes of Health 1998a,b), and Dietary Guidelines for Americans 2000 (U.S. Department of Agriculture . . . 2000). ATP III affirms the validity of lifestyle changes as first-line therapy for primary prevention. It places priority on LDL-lowering modifications because of the identification of LDL cholesterol as the primary target of therapy; however, ATP III also urges the use of a broad approach to lifestyle changes for CHD risk reduction in primary prevention.

g. Effectiveness of LDL-lowering drugs in primary prevention

Clinical trials of cholesterol-lowering drugs support the efficacy of clinical primary prevention in higher risk persons. In the era before statin drugs, several primary prevention trials of cholesterol lowering were carried out with drug intervention (Grundy 2000a). Landmark trials among these were the World Health Organization clofibrate trial (Committee of Principal Investigators 1978), the Helsinki Heart Study gemfibrozil trial (Frick et al., 1987; Huttunen et al., 1991; 1994), and the Lipid Research Clinics cholestyramine trial (Lipid Research Clinics Program 1984a,b). All of these trials of lipid-lowering therapy reduced major coronary events. However, they were underpowered to address the issue of total mortality; hence, in the minds of many, the benefits of lipid modification in primary prevention remained uncertain (Oliver 1981; Muldoon et al., 1990;

Ravnskov 1992). The availability of more efficacious cholesterol-lowering drugs (statins) made it possible to definitively test whether LDL lowering would reduce CHD risk. Two major primary prevention trials with statins were the West of Scotland Coronary Prevention Study (WOSCOPS) (Shepherd et al., 1995) and the Air Force/Texas Coronary Atherosclerosis Prevention Study (AFCAPS/TexCAPS) (Downs et al., 1998). Their results are summarized in Table II.7–1. In both trials, statin therapy significantly reduced relative risk for major coronary events. WOSCOPS also showed a very strong trend towards a reduction in total mortality. In AFCAPS/TexCAPS, the numbers of deaths in both placebo and treatment groups were so small that no conclusions could be drawn about effects of cholesterol-lowering therapy on total mortality; however, no significant adverse effects of statin therapy were detected.

Table II.7–1. Major Primary Prevention Trials with Statins

Study	Persons	Duration	Statin Drug (dose/d)	Baseline LDL-C (mg/dL)	LDL-C Change	Major Coronary Events	Revascu-larization	Coronary Mortality	Total Mortality
WOSCOPS	6595	4.9 yrs	Pravastatin 40 mg	192	-26%*	-31%*	-37%*	-33%*	-22%*
AFCAPS/ TexCAPS	6605	5 yrs	Lovastatin 20/40 mg	150	-25%*	-37%*	-33%*	NS	NS

* Changes significant at $p<0.05$ or lower.

WOSCOPS and AFCAPS/TexCAPS have important differences that reveal the potential spectrum of use of drugs for primary prevention. WOSCOPS participants, on average, had high LDL-cholesterol levels at baseline, and they often had multiple risk factors. AFCAPS/TexCAPS participants, in contrast, had only borderline high LDL-cholesterol levels and fewer other risk factors, except for relatively low HDL-cholesterol levels. Because of higher LDL cholesterol and more risk factors, WOSCOPS participants had a relatively high absolute risk. AFCAPS/TexCAPS is important because it showed that LDL-lowering therapy in persons with only borderline-high LDL-cholesterol levels produces a large reduction in relative risk. Nevertheless, absolute risk reduction was lower than in WOSCOPS participants, so that more persons had to be treated to receive the benefits of treatment. The implications of these two studies for use of LDL-lowering drugs in primary prevention are considered briefly below.

h. Selection of persons for short-term risk reduction with LDL-lowering drugs

The major reason for using LDL-lowering drugs in short-term, primary prevention is to reduce the likelihood of major coronary events in persons who presumably have advanced coronary atherosclerosis. Primary prevention trials with LDL-lowering drugs provide the rationale for this approach. The most robust primary prevention trial for evaluating benefits of LDL-lowering therapy was WOSCOPS. Its participants generally had elevated LDL cholesterol along with other CHD risk factors. In the WOSCOPS placebo group, 10-year risk for major coronary events (myocardial infarction and CHD death) was approximately 15 percent. Statin therapy reduced this risk by about one-third (Table II.7–1). In AFCAPS/TexCAPS, the estimated 10-year risk for major coronary events in the placebo group was 10.9 percent, but almost half of these events were unstable angina; risk for hard CHD (myocardial infarction + CHD death) was only about 7 percent. Thus, absolute risk in WOSCOPS participants was

approximately twice that of AFCAPS/ TexCAPS participants. Statin therapy in AFCAPS/TexCAPS produced reductions in relative risk similar to those in WOSCOPS; nonetheless, because of lower absolute risk in AFCAPS/TexCAPS, the number needed to treat (NNT) for every event prevented was higher than in WOSCOPS.

In these two primary prevention studies, statin therapy proved to be remarkably safe as well as efficacious. Since safety does not appear to be an issue for short-term risk reduction in primary prevention with LDL-lowering drugs, the determining factor for the lower risk cutpoint for drug recommendation will be cost-effectiveness (see Section II.14). As noted in Section II.14, the lower cutpoint for selection of drug therapy at current prices of LDL-lowering drugs is a risk for myocardial infarction and coronary death of about 1 percent per year (or 10 percent per 10 years). By this criterion many persons entering AFCAPS/TexCAPS were below accepted cost-effectiveness for short-term risk reduction with statins.

It must be emphasized that the ATP III clinical guidelines do not advocate the attainment of LDL goals exclusively through drug therapy. The aim of therapy is to achieve the LDL goals that are set according to absolute risk criteria. ATP III recommendations call for achieving the goals of therapy by the safest and most cost-effective means. Use of dietary therapy to attain the targets of therapy is emphasized, and if drugs are required, cost-effective agents should be used in the lowest doses needed to achieve the recommended goals of therapy.

i. Selection of older persons for short-term, primary prevention

Approximately two-thirds of first major coronary events occur in persons ≥65 years. Many asymptomatic older persons have advanced coronary atherosclerosis. Recent clinical trials have revealed that aggressive LDL-lowering therapy is effective in reducing risk for CHD (see Table II.2–3). Therefore, the prospects for reducing clinical CHD in the United States by intensive LDL lowering are good. To maximize this benefit, LDL-lowering drugs will be needed for many persons at higher risk. However, to fully implement widespread use of LDL-lowering drugs in older populations, several major problems will have to be overcome. For example, the most effective LDL-lowering drugs (statins) are often expensive; at current prices, statin therapy can cost up to $500–$1,500 per year. At present, Medicare does not pay for prescription drugs, and many older Americans do not have other private insurance to cover this high cost. Moreover, techniques to assess absolute risk in older persons are less reliable than for middle-aged persons. In particular, serum cholesterol is less robust as a predictor of CHD events in the elderly than in the middle aged (Psaty et al., 1999). Measurements of subclinical atherosclerosis are promising (Newman et al., 1993; Kuller et al., 1998), but currently are not widely available, nor have evidence-based guidelines been produced for their use (see Section II.5.c). Thus, selection of older persons for intensive LDL-lowering therapy with drugs requires a considerable degree of clinical judgment and may be less open to a specific guideline. Nonetheless, several factors can be taken into account when selecting older persons for intensive LDL-lowering therapy, particularly for drug therapy.

Framingham risk scoring remains the primary means of identifying older persons at higher risk. Even so, one factor that may add perspective in the selection of older persons for LDL-lowering drugs at different levels of risk projected from risk factors is an estimate of the

number of persons needed to treat (NNT) to achieve benefit. Table II.7–2 gives an estimate of the benefit of statin therapy in older persons over a 15-year period at different levels of projected 10-year risk, assuming that therapy is applied continuously between ages 65 and 80. The assumption is also made that statin therapy reduces risk for all CHD categories by approximately one-third and that for older persons, CHD deaths account for 50 percent of all hard CHD events. No published data provide the ratio of CHD deaths/hard CHD events in older persons, but considering the high mortality in this large group, an estimate of 50 percent appears reasonable.

Table II.7–2. Number Needed to Treat (NNT) with Statin Therapy for 15 Years to Prevent CHD Events by Age 80 Starting at Age 65*

10-Year Risk for Hard CHD†	NNT to Prevent CHD Events (15 Years of Drug Therapy)		
	CHD Death	Hard CHD†	Total CHD‡
10%	42	21	10
20%	20	10	5
30%	13	7	3
40%	10	5	1–2

* The results in this table assume that statin therapy reduces relative risk for all CHD events by one-third (see Table II.2–3).

† Hard CHD includes myocardial infarction + CHD death.

‡ Total CHD includes myocardial infarction, CHD death, unstable angina, and coronary procedures (angioplasty and coronary bypass surgery) (Wilson et al., 1998).

Factors other than the 10-year risk score based on major risk factors may further aid in selection of older persons for intensive LDL-lowering therapy. Since the relative risk accompanying some risk factors declines with advancing age, measures of subclinical atherosclerosis may assist in the identification of older persons who are at high absolute risk and who should benefit from more intensive therapy (see Section II.5.c). For example, a positive ankle-brachial blood pressure index places an older person in a high-risk category (see Section II.5.c.1), as does identification of myocardial ischemia (Section II.5.c.2). The same is true for older persons with advanced subclinical atherosclerosis identified by increased carotid artery thickening or coronary calcium (e.g., ≥75th percentile for age or sex) (see Section II.5.c.3). Thus, use of noninvasive measures of myochardial ischemia or subclinical atherosclerosis may be helpful in the selection of older persons who are good candidates for intensive LDL-lowering therapy including drug therapy. Beyond these approaches to risk assessment, however, many other medical and social factors must be taken into account in the selection of older persons for aggressive short-term risk reduction. These are discussed in more detail in Section VIII.3.

j. Selection of persons for long-term primary prevention in the clinical setting

The essential reason for using clinical resources for long-term primary prevention of CHD is to slow the development of coronary atherosclerosis. Long-term prevention in the clinical setting thus represents an extension of the public health approach. Unless coronary atherosclerosis is prevented (or greatly reduced), the total burden of CHD in society will not be substantially

reduced. The lion's share of the effort to prevent coronary atherosclerosis falls to the population (public health) approach; nonetheless, modification of risk factors in persons with a high lifetime risk requires attention by health professionals. A considered judgment is needed for how best to manage such persons. The physician is obliged to identify underlying risk factors (atherogenic diet, overweight/obesity, and physical inactivity) and to introduce risk reduction therapies for them. For the major risk factors, smoking cessation intervention is indicated for cigarette smokers, blood pressure lowering is required for persons with hypertension, and elevated LDL cholesterol should be lowered in those with high levels (≥160 mg/dL) regardless of the presence or absence of other risk factors. Lifestyle intervention is the preferred approach, but in some cases, drug therapy is optional or needed. ATP III outlines approaches to treatment of elevated LDL-cholesterol levels; if clinical management is needed, the report favors therapeutic options that will be robust even for long-term prevention. The absence of other risk factors does not obviate the need to treat elevated LDL cholesterol to reduce build-up of coronary atherosclerosis in the long term.

The concept of long-term prevention highlights the need for early detection of lipid disorders. Early detection links clinical and population approaches to primary prevention at an age when intervention can retard the early stages of atherogenesis. NCEP has long recommended that all adults, starting at age 20, undergo periodic testing for serum cholesterol levels. Some guidelines (Prevention of coronary heart disease in clinical practice 1998; Wood et al., 1998; Joint British recommendations 1998; 2000; Frohlich et al., 1998; Fodor et al., 2000; U.S. Preventive Services Task Force 1996) have recommended that cholesterol testing be delayed until later in life. This recommendation is predicated on the belief that risk can be largely reversed by clinical intervention later in life. A vast body of information on the evolution and natural history of atherosclerosis, however, contradicts this belief. As shown by recent clinical trials with statin therapy, clinical intervention in high-risk populations later in life still leaves many persons with an unacceptably high risk. In other words, if primary atherogenesis is ignored until atherosclerosis has become advanced, intervention to stabilize existing lesions can never reduce risk to the level of a person with minimal coronary lesions. Early detection of cholesterol disorders provides the opportunity to curtail development of coronary atherosclerosis from young adulthood, a time when atherogenesis is beginning to accelerate. Persons at highest long-term risk are those in the upper quartile of cholesterol levels during young adulthood (Anderson et al., 1987; Klag et al., 1993, Stamler et al., 2000). Elevated serum cholesterol belongs among a constellation of risk factors (cigarette smoking, elevated blood pressure, obesity, physical inactivity, and an atherogenic diet) that contributes to build up of coronary atherosclerosis throughout life (Berenson et al., 1992; 1998; Denke et al., 1993; 1994; McGill and McMahan, 1998; Neaton and Wentworth, 1992; Strong et al., 1997; 1999). Early detection of these risk factors, including elevated cholesterol, affords an opportunity to initiate interventions that will arrest or slow the progression of atherogenesis during young adulthood.

An additional important reason to test serum cholesterol in young adults is to identify genetic disorders of lipid and lipoprotein metabolism. Persons with heterozygous familial hypercholesterolemia are at particularly high risk, even in the short term. Although this disorder is not common, it is highly dangerous not only for the affected person, but potentially for first-degree relatives as well. Screening the relatives of persons with heterozygous familial hypercholesterolemia is important in identifying new cases and increasing the number of these

high-risk patients who are subsequently treated with LDL-lowering drug therapy (Umans-Eckenhausen et al., 2001). Moreover, there are other causes of severe hypercholesterolemia (e.g., polygenic hypercholesterolemia) that are more common and also are accompanied by increased risk for premature CHD. These genetic forms of hypercholesterolemia can now be treated effectively, which increases the need for their early detection. For more detail, see Section VII. Management of Specific Dyslipidemias.

The relationship between serum cholesterol levels and lifetime risk for CHD has been evaluated in the Framingham Heart Study. The lifetime risk for total CHD (i.e., all clinical manifestations of CHD) for men and women free of CHD at age 40 years is 1 in 2 for men and 1 in 3 for women; it decreases only slightly with advancing age attained free of CHD (Lloyd-Jones et al., 1999). Even at age 70 the lifetime risk for CHD remains high: 1 in 3 for men and 1 in 4 for women. The lifetime risk for men and women free of CHD at various ages varies according to total cholesterol levels as shown in Table II.7–3 below. Three ranges of total cholesterol are compared: <200, 200–239 mg/dL, and ≥240 mg/dL; these ranges approximately correspond to LDL-cholesterol ranges of <130, 130–159 mg/dL, and ≥160 mg/dL. For men at age 40, the risk of developing CHD in any form over the next 40 years for the three ranges is 31 percent, 43 percent, and 57 percent respectively. Corresponding risks in women are 15 percent, 26 percent, and 33 percent. This is in sharp contrast to the low 10-year risks at age 40. The figures below present the plots of lifetime risk at age 40 (Figure II.7–1) and age 70 (Figure II.7–2) for men (left panel) and women (right panel) at different total cholesterol levels.

These time-dependent risks have implications for ATP III guidelines. Increased lifetime risks associated with high total cholesterol levels (≥240 mg/dL), which correspond to categorically high LDL cholesterol (≥160 mg/dL), are clearly evident and justify clinical therapies to reduce long-term risk. But even borderline-high total cholesterol (200–239 mg/dL) carries significant long-term risk, and it deserves clinical intervention, albeit not necessarily with LDL-lowering drugs.

Table II.7–3. Short-Term and Lifetime Risk of CHD by Cholesterol Levels Obtained at Various Ages (modified from Lloyd-Jones et al., 1999)

	Total Cholesterol Level (mg/dL)					
	<200	200–239	240+	<200	200–239	240+
	Men			Women		
Age 40						
10-year risk	3%	5%	12%	1%	2%	5%
40-year risk	31%	43%	57%	15%	26%	33%
Age 50						
10-year risk	8%	10%	15%	2%	4%	8%
40-year risk	40%	42%	63%	19%	30%	39%
Age 60						
10-year risk	16%	15%	21%	5%	8%	11%
Lifetime risk	34%	41%	51%	20%	24%	36%
Age 70						
10-year risk	18%	22%	28%	5%	7%	13%
Lifetime risk	27%	36%	42%	14%	20%	29%
Age 80						
10-year risk	14%	23%	29%	14%	16%	17%
Lifetime risk	17%	23%	34%	17%	18%	21%

Figure II.7–1. Lifetime Risk of CHD by Total Cholesterol Level for Men (left) and Women (right) at Age 40 Years (derived from Lloyd-Jones et al., 1999)

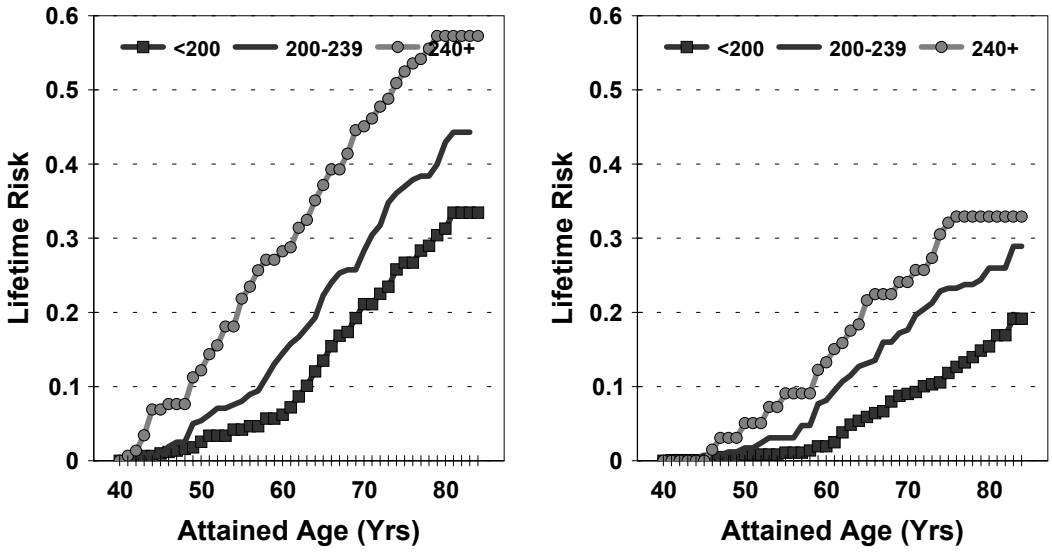

Figure II.7–2. Lifetime Risk of CHD by Total Cholesterol Level for Men (left) and Women (right) at Age 70 Years

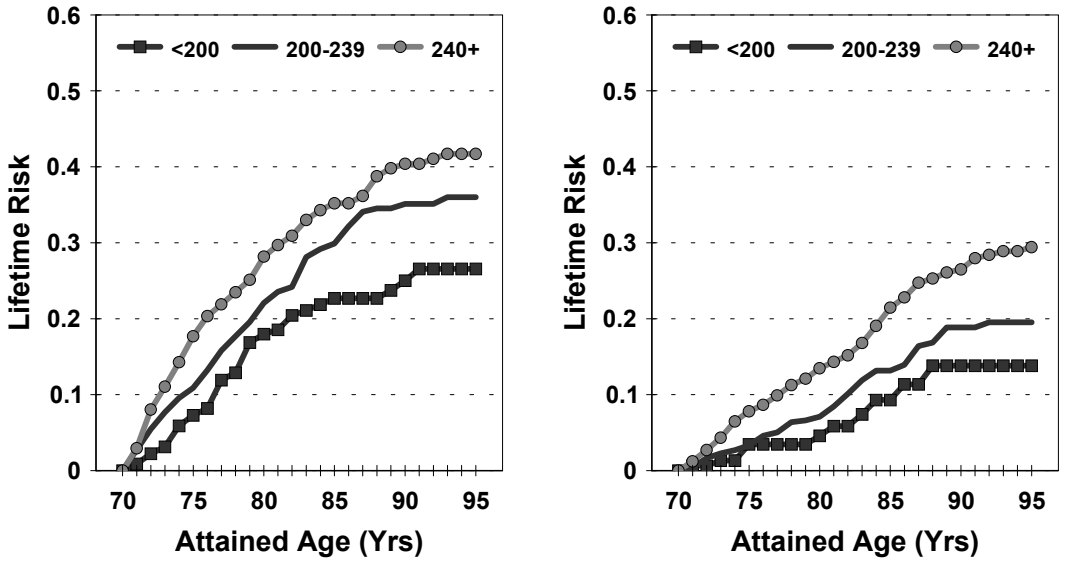

The major impediment to long-term primary prevention in clinical practice is the cost of therapy. Costs are incurred in all aspects of clinical intervention, e.g., physician time, dietary therapy, drugs, and monitoring. At present, the cost of drugs appears to predominate. This fact has led some guideline committees in other countries to recommend restricting use of LDL-lowering drugs to persons at high short-term risk (Prevention of coronary heart disease in clinical practice 1998; Wood et al., 1998; Joint British recommendations 1998; 2000; Faergemen 1999). This restriction is considered necessary because of financial constraints that require a conservative allocation of national medical resources. Certainly persons at higher risk in the short term (≤10 years) deserve priority in intervention including use of LDL-lowering drugs. Still, the advantages of preventing coronary atherosclerosis in the first place cannot be ignored. Lifetime prevention of CHD by retarding atherogenesis remains an important goal. Consequently, persons with above-average long-term risk deserve attention by physicians; they are not necessarily candidates for cholesterol-lowering drugs, but at the very least, deserve intervention on life habits. Physicians can use their influence to advocate and support long-term risk reduction.

The issue of long-term prevention with LDL-lowering drugs deserves comment. Elevated LDL cholesterol is the primary driving force for coronary atherogenesis. When LDL-cholesterol levels are high (≥160 mg/dL), atherosclerosis progresses at a relatively high rate. Persons with very high LDL-cholesterol levels (≥190 mg/dL) can develop premature CHD even in the absence of other risk factors. Those with high LDL-cholesterol levels (160–189 mg/dL) can experience premature CHD when other risk factors are present, even when absolute risk at a younger age is <10 percent per 10 years. There is little doubt that LDL-lowering drugs will curtail atherogenesis in these persons. Therefore, use of LDL-lowering drugs in such persons can be justified to achieve the benefits of long-term risk reduction even when drugs are not considered "cost-effective" by conventional analysis. As patents on initial statins expire and competition increases, it is highly likely that costs of LDL-lowering drugs will decline substantially.

Nonetheless, ATP III emphasizes that its goals for LDL cholesterol should be achieved by the most cost-effective means, i.e., by use of maximal dietary therapy before drugs and by choosing the most cost-effective drug regimens. ATP III considers the judicious use of LDL-lowering drugs in long-term prevention to be an "adjunct" to lifestyle changes—and not first-line therapy. For a more detailed discussion of the cost-effectiveness of LDL-lowering therapy, see Section II.14.

k. LDL goals in primary prevention

Prospective epidemiological studies show that the incidence of CHD is proportional to serum total cholesterol and LDL-cholesterol levels. When LDL-cholesterol levels are <100 mg/dL, CHD risk likewise is low, even in the presence of other risk factors (Keys et al., 1980; 1984; Grundy et al., 1990; Wilson et al., 1998). Thus, an LDL cholesterol <100 mg/dL can be called *optimal.* Moreover, when other coronary risk factors are largely absent and LDL-cholesterol concentrations are above but near optimal, i.e., 100–129 mg/dL, the 10-year risk for CHD is relatively low (Stamler et al., 1986; Kannel 1995) (see Table II.7–4).

Table II.7–4. 10-Year Risk for CHD in the Framingham Population for Low Risk and Lowest Risk Persons with LDL Cholesterol Levels 100–129 mg/dL (modified from Wilson et al., 1998)

Age Group (Years)	Average Risk*		Low Risk†		Lowest Risk‡	
	Men	Women	Men	Women	Men	Women
30–39	3%	<1%	1%	0%	0%	0%
40–49	6%	1.5%	2%	1%	1%	0%
50–59	11%	5%	3%	1%	2%	1%
60–69	20%	8%	4%	2%	2%	1%
70–74	25%	11%	6%	3%	3%	1%

* Average 10-year risk for hard CHD (myocardial infarction and CHD death) in the Framingham population regardless of LDL-cholesterol levels.

† Low risk level = 10-year absolute risk for hard CHD (myocardial infarction and CHD death) in a subject with LDL cholesterol 100–129 mg/dL, blood pressure <130/<85 mmHg, no treatment for hypertension, HDL cholesterol 45–59 mg/dL, nondiabetic and nonsmoker.

‡ Lowest risk level = 10-year absolute risk for hard CHD in a subject with LDL cholesterol 100–129 mg/dL, blood pressure <120/<80 mmHg, no treatment for hypertension, HDL cholesterol ≥60 mg/dL, nondiabetic and nonsmoker.

Despite the low risk for CHD accompanying LDL-cholesterol levels that are optimal (<100 mg/dL) or above but near optimal (100–129 mg/dL), the intensity of clinical intervention required to achieve such levels for everyone in the population would financially overload the health care system. Drug usage would rise enormously. Selection of persons for clinical intervention depends on the principle of adjusting intensity of therapy to absolute risk. Persons at higher risk require more intensive therapy to attain the goal of a lower risk LDL level. In ATP III the decision was made to set the primary LDL-cholesterol goals according to the number of major risk factors, as was done in ATP II.

In ATP II (National Cholesterol Education Program 1993; 1994), the LDL-cholesterol goal for persons with multiple (2+) risk factors was <130 mg/dL. This goal is maintained in ATP III. Therapeutic lifestyle changes can be recommended for all such persons whose LDL cholesterol is ≥130 mg/dL at baseline. These changes include an LDL-lowering diet, weight reduction, and increased physical activity. As in ATP II, for persons with multiple risk factors, ATP III continues to recommend consideration of LDL-lowering drugs when LDL-cholesterol levels are ≥160 mg/dL after therapeutic lifestyle changes. However, new evidence outlined in this section supports more intensive therapy to achieve this goal for some persons whose LDL-cholesterol levels are borderline high (130–159 mg/dL) after therapeutic lifestyle changes. Thus, when multiple risk factors are present and 10-year risk for CHD is relatively high (i.e., ≥10 percent), consideration of LDL-lowering drugs is warranted when LDL cholesterol is ≥130 mg/dL after lifestyle changes. Not only is consideration justified by clinical trials that showed that drug therapy is efficacious, but it was found to be cost-effective as well (see Section II. 14. f). Indeed, for those at highest 10-year risk (i.e., >20 percent), an optimal LDL cholesterol is a suitable target goal. On the other hand, when 10-year risk is low to moderate (<10 percent), restricting LDL-lowering drugs to those with LDL cholesterol ≥160 mg/dL still seems appropriate on grounds of both efficacy and cost-effectiveness.

When 0–1 risk factor is present, LDL-lowering therapy need not be as intense because absolute risk is not as high as when multiple risk factors are present. Most persons with 0–1 risk factor have a 10-year risk for CHD <10 percent. In such persons, an LDL-cholesterol goal of <160 mg/dL is allowable. Although a lower level (<130 mg/dL) is nearer to optimal, introduction of drug therapy to treat LDL-cholesterol levels of 130–159 mg/dL when 10-year risk is <10 percent is unrealistic. An enormous number of people would then be drug-eligible. They would require many years of drug therapy before realizing any discernible population benefit; any unrecognized long-term side effects of drugs would be magnified in this large group of lower risk persons; and drug therapy would not be cost-effective by current standards. Whether to consider drug therapy in persons with 0–1 risk factor and LDL cholesterol 160–189 mg/dL after lifestyle changes is more problematic. Their short-term risk is relatively low, and drug therapy is of marginal cost-effectiveness at current drug prices (see Section II.14.f). However, atherogenesis undoubtedly is accelerated, and use of drugs must be deemed optional if other factors (e.g., severe single-risk factors, a family history of premature CHD, life-habit risk factors, or emerging risk factors) are present beyond the count of major risk factors. Finally, when LDL cholesterol is ≥190 mg/dL after lifestyle changes, drug therapy should be considered even in persons with 0–1 risk factor because of accelerated atherogenesis and high long-term risk.

Evidence statements: *A strong relationship exists between LDL-cholesterol levels and CHD risk (C1). An elevated serum total cholesterol contributes to coronary atherosclerosis throughout life; serum total cholesterol levels measured in young adulthood correlate with CHD rates later in life and over a lifetime (C1). For persons without other CHD risk factors, risk for CHD is relatively low when LDL-cholesterol levels are <130 mg/dL (C1). Moreover, for persons with higher LDL-cholesterol levels (≥130 mg/dL), clinical trials document the efficacy of LDL lowering to reduce risk for CHD in primary prevention (A1, B1), particularly when LDL-cholesterol levels are reduced to <130 mg/dL (A1).*

Recommendation: *LDL-lowering therapy should play an important role in primary prevention of CHD in persons at increased risk. For persons at increased risk because of the presence of multiple risk factors, the LDL-cholesterol goal should be <130 mg/dL. Therapeutic lifestyle changes should be initiated in all such persons. Persons with multiple risk factors whose short-term (10-year) risk is low to moderate (<10 percent) generally should not receive LDL-lowering drugs when LDL-cholesterol concentrations are only borderline high (130–159 mg/dL), but drugs should be considered when LDL levels are high (≥160 mg/dL). For higher risk persons with multiple risk factors (10-year risk 10–20 percent), consideration should be given to drug therapy when the LDL goal (<130 mg/dL) cannot be achieved by lifestyle therapies. Finally, multiple-risk-factor persons at highest risk (10-year risk >20 percent) need to attain even lower LDL-cholesterol levels (LDL goal <100 mg/dL), and consideration should be given to starting drug therapy simultaneously with therapeutic lifestyle changes when LDL-cholesterol levels are ≥130 mg/dL.*
Recommendation: *For persons who are otherwise at lower risk (0–1 risk factor), an effort should be made to lower LDL-cholesterol levels to <160 mg/dL. In such persons, lifestyle changes should be emphasized when the LDL-cholesterol level is in the range of 130–159 mg/dL to minimize the risk of any marginal (subcategorical) risk factors. Drug therapy at these LDL levels generally should be avoided, because of lack of long-term data on safety and because of relatively low cost-effectiveness ratios. In persons with 0–1 risk factor, if LDL-cholesterol levels cannot be reduced to <160 mg/dL by therapeutic lifestyle changes, LDL-lowering drugs can be viewed as optional when levels are in the range of 160–189 mg/dL, and should be strongly considered when levels persist at ≥190 mg/dL. Physicans should opt for drug therapy at former levels (160–189 mg/dL) when persons appear to have risk that is greater than that revealed by 0–1 standard risk factor, i.e., because of a severe single-risk factor, a family history of premature CHD, or the presence of life-habit or emerging risk factors.*
Recommendation: *Routine cholesterol testing should begin in young adulthood (≥20 years of age). In young adults, above-optimal LDL-cholesterol levels deserve attention. When LDL-cholesterol concentrations range from 100–129 mg/dL, young adults should be encouraged to modify life habits to minimize long-term risk. In those with borderline high LDL cholesterol (130–159 mg/dL), clinical attention through therapeutic lifestyle changes is needed both to lower LDL cholesterol and to minimize other risk factors. If LDL cholesterol is high (160–189 mg/dL), more intensive clinical intervention should be initiated, with emphasis on therapeutic lifestyle changes. However, if LDL cholesterol remains elevated despite therapeutic lifestyle changes, particularly when LDL cholesterol is ≥190 mg/dL, consideration should be given to long-term management with LDL-lowering drugs.*

8. Secondary prevention: persons with CHD

a. Secondary prevention of recurrent CHD

Persons with established CHD are at very high risk for recurrent CHD. A growing body of evidence indicates that LDL-lowering therapy reduces recurrent coronary events in persons with existing CHD. The results of earlier secondary prevention trials, which were the basis of ATP II

recommendations, are summarized in Table II.8–1. As shown, even before introduction of statins, cholesterol-lowering therapy was found to reduce CHD events without evidence of an increase in noncardiovascular mortality (Rossouw et al., 1990, Rossouw 1994). Subsequent secondary prevention trials with statins documented a reduction in cardiovascular morbidity and mortality and total mortality. These latter trials included those with both angiographic outcomes (Brown et al., 1990; Waters et al., 1994; Pitt et al., 1995; Azen et al., 1996; The Post-CABG Trial Investigators 1997; Holmes et al., 2000) and clinical endpoints (Scandinavian . . . Study Group 1994; Sacks et al., 1996; Long-Term Intervention . . . Study Group 1998). In several of the angiographic trials, a significant decline in the incidence of clinical CHD events was observed in the treated group in a period of only two years (Table II.2–2). This finding makes it probable that the instability of plaques (which leads to fissuring, thrombosis, and intramural hemorrhage) is reduced as well (Constantinides 1990; Brown et al., 1993; Falk et al., 1995; Levine et al., 1995; Ballantyne 1998). The three major secondary prevention trials with statins were the Scandinavian Simvastatin Survival Study (4S) (Scandinavian . . . Study Group 1994), Cholesterol and Recurrent Events (CARE) Study (Sacks et al., 1996), and the Long-Term Intervention with Pravastatin in Ischemic Disease (LIPID) Study (Long-Term Intervention . . . Study Group 1998). Results of these trials are summarized in Table II.8–2. All three showed reductions in recurrent myocardial infarction and coronary death, coronary artery procedures, and stroke. Two of the trials reported a reduction in total mortality with statin therapy. Thus, secondary prevention trials provide strong evidence for the benefit of cholesterol-lowering therapy in persons with established CHD.

Table II.8–1. Earlier Secondary Prevention Trials: Morbidity and Mortality Results*†

Event	Proportion of Deaths	Relative Risk	Confidence Interval
Nonfatal myocardial infarction	—	0.74	0.66–0.84
Fatal myocardial infarction	73%	0.86	0.77–0.96
Cardiovascular deaths	90%	0.89	0.79–1.00
Cancer deaths	5%	0.89	0.59–1.39
Other deaths	4%	1.14	0.71–1.82
All deaths	100%	0.91	0.81–1.01

* Meta-analysis by Rossouw based on Rossouw et al., 1990; Rossouw 1991.

† Trials include Medical Research Council's low-fat diet trial (Research Committee 1965), Medical Research Council's soya-bean oil trial (Research Committee . . . 1968), Scottish Society of Physician's clofibrate trial (Research Committee . . . 1971), Stockholm Ischaemic Heart Disease Secondary Prevention Study (Carlson and Rosenhamer, 1988), Coronary Drug Project's clofibrate trial (Canner et al., 1986; Coronary Drug Project . . . 1975), Coronary Drug Project's niacin trial (Canner et al., 1986; Coronary Drug Project . . . 1975), and Program on the Surgical Control of Hyperlipidemias (Buchwald et al., 1990).

Table II.8–2. Major Secondary Prevention Trials with Statins: Morbidity and Mortality Results

Study	Persons	Duration	Drug (dose/d)	Baseline LDL-C (mg/dL)	LDL-C Change	Major Coronary Events	Revascu-larization	Coronary Mortality	Total Mortality	Stroke
4S	4444	5.4 yrs	Simvastatin 10/40 mg	188	-35%*	-35%*	-37%*	-42%*	-30%*	-27%*
CARE	4159	5 yrs	Pravastatin 40 mg	139	-27%*	-25%*	-27%*	-24%*	-9%	-31%*
LIPID	9014	5 yrs	Pravastatin 40 mg	150	-25%*	-29%*	-24%*	-24%*	-23%*	-19%*

* Statistically significant changes at $p<0.05$ or lower.

Recent statin trials also reveal the impact of LDL lowering on selected populations and on additional clinical endpoints. LDL lowering has been shown to produce marked benefit regardless of gender, age, and the presence of diabetes, smoking, and hypertension (Byington et al., 1995; Sacks et al., 1996; Waters et al., 1995; Kjekshus et al., 1995; Pyörälä et al., 1997; Miettinen et al., 1997; Goldberg et al., 1998). Furthermore, in CHD patients, LDL lowering decreases stroke rates (Scandinavian . . . Study Group 1994; Sacks et al., 1996; Crouse et al., 1997; Hebert et al., 1997; Long Term Intervention . . . Study Group 1998), improves angina and myocardial perfusion (Anderson et al., 1995; Kjekshus and Pedersen, 1995; Aengevaeren et al., 1997; Pedersen et al., 1998a; Gould et al., 1998), and decreases the need for subsequent revascularization (Scandinavian Simvastatin Survival Study Group 1994; Sacks et al., 1996; The Post-CABG Trial Investigators 1997; LIPID Study Group 1998; Knatterud et al., 2000).

ATP II (National Cholesterol Education Program 1993, 1994) identified the LDL-cholesterol goal for secondary prevention to be a level ≤100 mg/dL. Recent clinical trials provide an opportunity for reexamination of this goal. Epidemiological data strongly suggest that the prevalence of CHD is lowest when the LDL-cholesterol level is <100 mg/dL. Large studies and meta analyses have revealed that CHD rates decrease with declining cholesterol levels down to a total cholesterol of 150 mg/dL, corresponding to an LDL cholesterol of about 100 mg/dL (Stamler et al., 1986; Law et al., 1994b; Law 1999; Holme 1996). Epidemiological data demonstrate a continuous (log-linear) relationship between LDL cholesterol (and total cholesterol) and CHD risk (Law et al., 1994b; Law 1999). The log-linear relationship holds to levels of LDL cholesterol below 100 mg/dL (Chen et al., 1991). Factors that increase risk (e.g., presence of CHD) shift the curvilinear relationship, increasing the risk impact of LDL cholesterol at lower ranges (Cullen et al., 1997). Models based upon epidemiological data support the concept that LDL-lowering treatment at baseline total cholesterol levels >200 mg/dL (comparable to baseline LDL of approximately 130 mg/dL) will lower mortality and morbidity (Grover et al., 1992). Finally, Law et al. (Law et al., 1994b; Law 1999) reported that results of epidemiological studies and clinical trials are highly congruent, providing additional support for the applicability of epidemiological data for setting LDL-cholesterol goals in secondary prevention.

Angiographic studies on the whole are consistent with maximal CHD reduction in secondary prevention occurring at LDL levels <100 mg/dL. Three studies are particularly noteworthy:

POSCH (Buchwald et al., 1990; 2000), FATS (Brown et al., 1990), and Post-CABG (The Post-CABG Trial Investigators 1997). POSCH (using surgery) and FATS (using nicotinic acid and a statin or sequestrant) achieved LDL levels near 100 mg/dL and showed favorable changes in coronary lesions. The Post-CABG trial tested the concept that a lower LDL is better by examining the benefits of moderate versus aggressive LDL lowering on progression of atherosclerosis in saphenous vein grafts. Using a statin and sequestrant if needed, the moderate treatment group was treated to maintain LDL levels between 130–140 mg/dL, and the aggressive treatment group was titrated to a target LDL of <95 mg/dL. The aggressively treated group had less progression, fewer new lesions, and needed less revascularization (The Post-CABG Trial Investigators 1997; Knatterud et al., 2000).

Post-hoc analyses of statin trials clearly show benefit from LDL cholesterol lowering to the range of 100 to 125 mg/dL (Grundy 1998b; Sacks et al., 1998; Pedersen et al., 1998b; Gotto et al., 1999). Not all of the studies confirm that an optimal LDL cholesterol is <100 mg/dL; however, in subgroup analysis the statistical power to reliably define the lower limit of benefit may be lacking. In the 4S trial (Pedersen et al., 1998b), lowering of LDL levels gave proportional and continuous but progressively smaller absolute decrements in CHD risk down to an LDL cholesterol of 100 mg/dL. In CARE (Sacks et al., 1996; 1998) benefit with statin treatment was seen with mean on-therapy LDL-cholesterol levels in the range of 100 mg/dL throughout the study (Figure II.8–1). Although CARE and LIPID could not rule out a threshold relation at LDL cholesterol less than 125 mg/dL, the combined data from epidemiological, angiographic (Blankenhorn et al., 1993; Brown et al., 1997; Brown and Zhao, 2000; Kroon et al., 1996), and other clinical trials support an LDL-cholesterol goal of <100 mg/dL for secondary prevention.

Recently, clinical trials have examined the effect of treatment to lower LDL cholesterol goals, and earlier treatment of patients. Although no single trial conclusively confirms a specific LDL-cholesterol goal lower than 100 mg/dL, six studies showed a clinical benefit in the treatment group with on-treatment LDL cholesterol from 72 mg/dL to 98 mg/dL (Schwartz et al., 2001 [MIRACL]; Pitt et al., 1999 [AVERT]; Blankenhorn et al., 1993 [MARS]; Kroon et al., 1996 [LAARS]; Post-CABG, Brown et al., 1997 [FATS extension]; Brown BG et al., 2000 [HATS]). The totality of this data suggests that further benefit accrues in patients treated to an LDL-cholesterol level below 100 mg/dL. It is not known whether LDL levels markedly below 100 mg/dL versus marginally below 100 mg/dL confer any additional benefit. Trials with clinical endpoints (AVERT, MIRACL) and other endpoints, including vascular function, confirm an early (1 week to 3 months) benefit of statin treatment for patients with atherosclerosis or acute coronary syndromes. In this regard MIRACL is noteworthy, demonstrating that statin treatment initiated in hospital (in patients with non-Q MI or unstable angina) was safe and was associated with a 16 percent relative risk reduction at 16 weeks. Also supporting the concept of early treatment is a recently published, very large observational study from Sweden. In-hospital initiation of statin treatment was associated with an adjusted 25 percent lowering of total mortality at 1 year (Stenestrand and Wallentin, 2001).

Figure II.8–1. Relation of CHD Events to LDL Levels in Treatment and Placebo Groups: Statin Trials

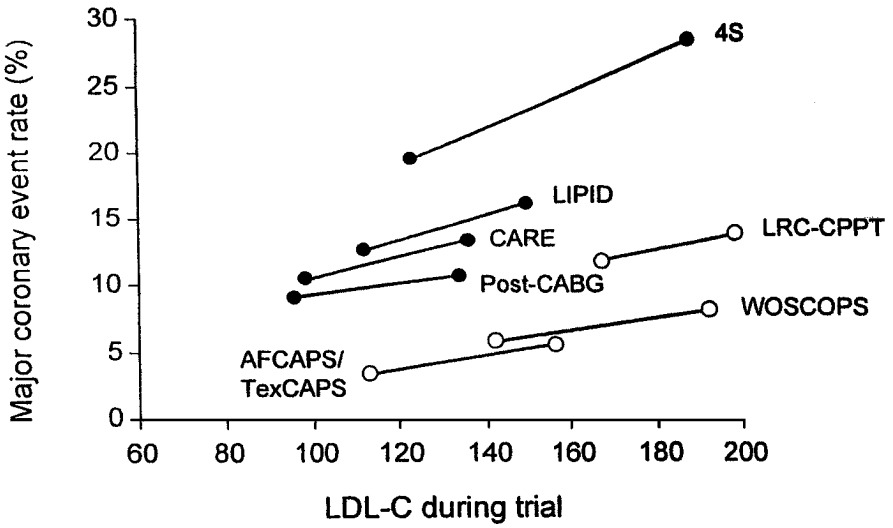

(Waters and Azar, 2000)

The recent VA-HIT trial (Rubins et al., 1999), however, revealed that modification of other lipid risk factors could reduce risk for CHD when LDL cholesterol is in the range of 100 to 129 mg/dL (Tables II.8–3a–b). In this trial, persons with low LDL (mean 112 mg/dL) were treated with gemfibrozil for 5 years. Gemfibrozil therapy, which raised HDL and lowered triglyceride, reduced the primary endpoint of fatal and non-fatal myocardial infarction by 22 percent without significantly lowering LDL-cholesterol levels. This study thus raises the possibility of efficacy from optional use of non-statin drugs when LDL-cholesterol levels in CHD patients are in the range of 100–129 mg/dL.

Table II.8–3a. Veterans Affairs HDL Intervention Trial (VA-HIT): Lipids and Lipoproteins

Persons	Drug/Duration	Total Cholesterol (mg/dL)	LDL Cholesterol (mg/dL)	HDL Cholesterol (mg/dL)	Trigly-ceride (mg/dL)	Non-HDL cholesterol (mg/dL)
2531 men	Gemfibrozil (1200 mg/day) 5.1 years	175*	111*	32*	161*	143*
	% Difference (Treatment minus Control)	-4%	0%	+6%	-31%	-6%

* Baseline levels.

Table II.8–3b. Veterans Affairs HDL Intervention Trial (VA-HIT): Cardiovascular Events: Percent Risk Reduction (95 percent Confidence Intervals)

Non-Fatal Myocardial Infarction + CHD Death	CHD Death	Non-Fatal Myocardial Infarction	Stroke	Revascularization	Total Mortality
22%*	22%	23%†	31%‡	9%	11%
(7 to 35%)	(-2 to 41%)	(4 to 38%)	(2 to 52%)	(-8 to 23%)	(-8 to 27%)

* Primary endpoint, p = 0.006.

†, ‡ secondary endpoints, p = 0.02 and 0.036, respectively.

Despite the strongly positive result of gemfibrozil therapy in the VA-HIT trial, less striking results have been reported for other fibrate trials in secondary prevention. For example, the clofibrate arm of the early Coronary Drug Project (Coronary Drug Project Research Group 1975) produced no evidence of benefit. Another early secondary prevention trial (Research Committee 1971) with clofibrate gave more favorable outcomes, but the reduction in CHD events was not statistically significant. Results from the recent BIP trial with bezafibrate therapy were essentially negative (Bezafibrate Infarction Prevention Study 2000). This secondary prevention study recruited patients with a mean LDL cholesterol >130 mg/dL; in similar CHD patients, both CARE and LIPID trial results were strongly positive with statin therapy. Thus, statin therapy is clearly preferred over fibrates in patients with borderline high or high LDL cholesterol (≥130 mg/dL). Nonetheless, VA-HIT findings support the potential for significant additional risk reduction in patients with low LDL cholesterol (<130 mg/dL). VA-HIT results also support a positive trend for CHD events (although not for all-cause mortality) when all fibrate trials are considered together (Gordon 2000).

Evidence statements*: Secondary prevention trials demonstrate that reduction of LDL-cholesterol levels significantly reduces risk for recurrent major coronary events in persons with established CHD (A1). Evidence from end-point trials with cholesterol-lowering drugs, angiographic trials, and epidemiological studies indicates that maximal CHD reduction occurs when LDL cholesterol is <100 mg/dL (A2, B1, C1).*
Recommendation*: Persons with established CHD should receive intensive LDL-lowering therapy. The goal of therapy in persons with established CHD should be LDL cholesterol <100 mg/dL.*

Evidence statement*: Persons with established CHD who have a baseline LDL cholesterol ≥130 mg/dL receive benefit from institution of LDL-cholesterol-lowering drugs (A1).*
Recommendation*: Persons with established CHD who have a baseline LDL cholesterol ≥130 mg/dL should be started on a cholesterol-lowering drug simultaneously with therapeutic lifestyle changes and control of nonlipid risk factors (therapeutic lifestyle changes alone are unlikely to achieve the LDL-cholesterol goal of <100 mg/dL).*

***Evidence statements**: Persons with established CHD who have a baseline LDL cholesterol of 100–129 mg/dL likely will benefit from reducing LDL cholesterol to <100 mg/dL (A2, B2, C1). These persons also appear to benefit from therapy that modifies atherogenic dyslipidemia (A2, B2).*
***Recommendation**: Several options should be considered for treatment of CHD patients with baseline LDL-cholesterol levels of 100–129 mg/dL. These include use of a cholesterol-lowering drug, maximization of therapeutic lifestyle changes, use of a drug to modify atherogenic dyslipidemia, and intensified control of nonlipid risk factors.*

b. Effects of lipid-lowering therapy on stroke

Recent clinical trials in patients with established CHD indicate that lipid-lowering therapy, especially with statins, reduces risk for stroke. A significant reduction in stroke was reported in all three major clinical trials with statins—4S (Pedersen et al., 1998a), CARE (Plehn et al., 1999), and LIPID (Long-Term Intervention . . . Study Group 1998; White et al., 2000). A similar result was obtained with a meta-analysis of several smaller clinical trials with pravastatin (Byington et al., 1995). Subsequent meta-analysis of all statin trials revealed that statin therapy reduces stroke in patients with established CHD by 27–31 percent (Blauw et al., 1997; Hebert et al., 1997; Crouse et al., 1998). Subsequent analyses of pooled pravastatin studies confirm benefit of statin therapy on strokes (Byington et al., 2001). The mechanisms whereby statin therapy reduces stroke in CHD patients are not well understood but probably involve retardation of plaque progression, plaque stabilization, and reduction of the risk for coronary events (Crouse 1999). Regardless, reduction in stroke is definitely an added benefit of statin therapy in secondary prevention. Besides statin therapy, treatment with gemfibrozil in patients with established CHD in the VA-HIT trial reduced investigator-designated stroke by 25 percent, confirmed stroke by 25 percent, and transient ischemic attacks by 59 percent (Rubins et al., 1999). In summary, lipid lowering, particularly with statins, reduces risk for stroke in patients with established CHD. The question of whether LDL-lowering therapy in primary prevention also reduces stroke has not been adequately tested, although one meta-analysis (Hebert et al., 1997) showed a strong trend towards benefit.

***Evidence statement:** In persons with established CHD, LDL-lowering therapy reduces risk for stroke (A1, B1).*
***Recommendation:** For persons with established CHD, LDL-lowering therapy should be carried out to reduce the risk for stroke and for recurrent coronary events.*

9. Total mortality considerations and therapeutic safety

Beyond the striking reduction in CHD rates accompanying lowering of LDL cholesterol lies the question of whether cholesterol-lowering therapy will actually extend the life span. At the time of publication of ATP II (1993), the net impact of cholesterol lowering on mortality was an area of controversy. Previous clinical trials generally had not been designed with sufficient power to

address all-cause mortality. In the early 1990s, several meta-analyses found that mortality from all causes was essentially identical in treated and control persons, despite a significant reduction in CHD mortality (Holme 1990; Muldoon et al., 1990; Rossouw et al., 1990; Ravnskov 1992; Smith et al., 1993; Holme 1993; Gould et al., 1995). This finding raised concerns that cholesterol lowering per se might be causing an increase in non-CHD mortality that offset the reduction in CHD. This concern was reinforced by reports that total mortality rates in populations are relatively high in subgroups with the lowest cholesterol levels.

Further analysis of earlier trials yielded possible explanations for a failure of reduced CHD event rates to translate into reduced mortality rates (Gordon 2000). For example, drugs such as estrogen, dextrothyroxine, and possibly clofibrate, may have had toxicity that obscured the benefit of other drugs. Also, a reduction in all-cause mortality is difficult to detect when total deaths from CHD in clinical trials are relatively low. For instance, all-cause mortality was reduced in secondary prevention trials (where 80 percent of deaths were due to CHD) but were increased in primary prevention trials that included potentially toxic drugs (where only 37 percent of deaths were due to CHD). Finally, the modest degree of cholesterol lowering in most of the earlier trials probably was insufficient to test the hypothesis that treatment reduced total mortality. Analyses of the earlier trials indicated that the crossover point where the reduction in CHD mortality began to outstrip the increase in non-CHD mortality was at an 8–10 percent reduction in serum cholesterol (Holme 1996; Gould et al., 1998).

Since the ATP II report, trials using statins have been reassuring for total mortality considerations. Five large long-term cholesterol-lowering trials using statins, as well as 11 smaller trials of 2–4 years duration, were published between 1993 and 1999 (Furberg et al., 1994; Scandinavian . . . Study Group 1994; MAAS Investigators 1994; Shepherd et al., 1995; Salonen et al., 1995; Pitt et al., 1995; Crouse et al., 1995; Sacks et al., 1996; Mercuri et al., 1996; Post Coronary Artery Bypass Graft Trial Investigators 1997; Downs et al., 1998; Long-Term Intervention . . . [LIPID] Study Group 1998). In these trials, which encompass more than 17,000 statin treated persons followed for an average of 5 years, statin drugs have consistently produced reductions of 18 percent or more in serum cholesterol levels, and have been remarkably free of adverse effects. Two of the large secondary prevention trials, 4S (Scandinavian . . . Study Group 1994) and LIPID (Long-Term Intervention . . . Study Group 1998), demonstrated significant reductions in mortality by themselves, and several others showed clear trends in the same direction. Meta-analysis of these trials shows an overall 29 percent reduction in CHD mortality ($P < 0.001$) and an 11 percent reduction in non-CHD mortality ($P = 0.06$). All-cause mortality was reduced by 22 percent ($P < 0.001$). Finally, a global meta-analysis incorporating 40 trials using statins, fibrates, sequestrants (or partial ileal bypass surgery), nicotinic acid, and/or diet to lower cholesterol now shows a 12 percent reduction in all-cause mortality ($P < 0.001$) (Table II.9–1). The results in Table II.9–1 constitute a refinement of a recent meta-analysis reported by Gordon (2000). Results were prepared for ATP III by panel members D. Gordon and M.A. Proschan.

Table II.9–1. Meta-Analysis of Mortality in Cholesterol-Lowering Trials by Treatment Modality

Treatment Modality	Number of Trials	Number (Treatment/ Control)	% Δ Cholesterol	Mortality	
				Deaths	OR (P)
Statins	17	18494/18449	20%	1107/1381	.78 (<.001)
Fibrates	7	10654/12999	9%	859/1277	1.03 (.58)
CHD Mortality for Fibrates →				495/884	.93 (.24)
Non-CHD Mortality for Fibrates →				364/393	1.19 (.02)
Sequestrants	5	3562/3530	12%	159/191	.81 (.06)
Other*	14	4025/5801	10%	789/1293	.93 (.19)
All trials†	42	36775/37321	15%	2914/3420	.88 (<.001)

* Nicotinic acid, diet, and various combinations of drugs.

† Multi-armed trials (CDP, STARS) are counted only once in the totals although their arms can contribute to more than one row.

Evidence statements: *Overall Benefit of Cholesterol Lowering on Mortality. LDL-lowering therapy reduces total mortality, i.e., extends life, by decreasing CHD mortality (A1, B1). This therapeutic benefit was unclear in earlier trials using interventions with limited cholesterol lowering (10 percent), some of which showed adverse non-CHD effects. However, in trials using statins, in which cholesterol levels were reduced by 20 percent and non-CHD mortality was not increased, the reduction in mortality is incontrovertible.*

Evidence statements: *Benefit of Cholesterol Lowering on Mortality in Secondary Prevention. The benefits of cholesterol lowering on longevity are particularly clear in CHD patients and other high-risk populations due to their high short-term mortality rates when left untreated and to the high proportion of those deaths caused by CHD (A1, B1). In persons with established CHD, a reduction in CHD deaths by effective cholesterol-lowering therapy more than outweighs any side effects of drug therapy.*

Evidence statements: *Benefit of Cholesterol Lowering on Mortality in Primary Prevention. Primary prevention trials using statins show a significant reduction in CHD mortality, no increase in non-CHD mortality, and a strong trend towards lower overall mortality (A2). Because of the lower proportion of deaths that are due to CHD in primary prevention trials (relative to secondary prevention), the latter trend is not significant. The statin trials lasted an average of five years; longer-term observational studies offer a better indication of the potential lifelong impact of cholesterol reduction on mortality (C1). The lack of overall reduction in mortality in primary prevention trials performed before the advent of the statins can be explained by their modest cholesterol reduction (<10 percent) and in some instances by adverse non-CHD effects not seen with the statins.*

Beyond the recent clinical trials showing a reduction in total mortality from LDL-lowering therapy, questions remain about short-term and long-term safety of specific LDL-lowering modalities. The dispute about the safety of lowering of LDL per se has been resolved, at least for

the short term; net benefits in high-risk persons exceed any adverse effects. Furthermore, no evidence for adverse effects of dietary therapy has been uncovered for the short term; in contrast, the optimal diet for long-term prevention of CHD remains an issue under investigation (see Section V). The fact that all drugs potentially carry side effects must be kept in mind when using them for prevention of CHD. Consideration can first be given to short-term side effects. Bile acid sequestrants cause a variety of gastrointestinal side effects, although none of these is apparently life threatening (Lipid Research Clinics Program 1984a,b). Nicotinic acid has numerous short-term side effects, and some persons can develop severe liver toxicity (Coronary Drug Project Research Group 1975). Overall, however, clinical experience does not suggest an increase in non-CHD mortality from use of nicotinic acid. Statins have proven to be remarkably free of short-term side effects, although occasionally persons develop severe myopathy. Controversy persists about the short-term safety of fibrates. Therapy with these drugs can cause myopathy and gallstones. Moreover, in the WHO clofibrate trial (Committee of Principal Investigators 1978), the treatment group showed an increase in total mortality, compared to the placebo group. The reasons for the higher mortality were never identified. Otherwise, a statistically significant higher mortality from non-CHD causes has never been observed in other clinical trials using fibrate therapy. Nonetheless, when all fibrate trials are combined in meta-analysis, the results of the large WHO trial overshadow other trials and lead to a persistent increase in non-CHD mortality. Many investigators, however, doubt that fibrate therapy carries an increased risk for fatal side effects in the short term. But the results of the WHO trial remain a reminder that fibrates should be limited to persons in whom they will provide the greatest benefit, such as those with hypertriglyceridemia (Huttunen et al., 1991) or the metabolic syndrome (Rubins et al., 1999).

The issue of long-term safety of LDL-lowering drugs cannot be resolved by short-term clinical trials. There is always the possibility that chronic administration of drugs will lead to unanticipated side effects. There is no evidence that currently used cholesterol-lowering drugs promote development of cancer or induce subtle neurological diseases. Moreover, clinical experience with these drugs over periods of 30 years for fibrates and bile acid sequestrants and 15 years for statins has uncovered no long-term side effects. Nonetheless, the possibility of long-term side effects, albeit remote, should be one factor to consider when recommending lifetime therapy with a cholesterol-lowering drug.

10. Magnitude of reduction in CHD risk

Clinical trials (Downs et al., 1998; Pedersen et al., 1998b; Long-Term Intervention. . . Study Group 1998; Lipid Research Clinics Program 1984b; Sacks et al., 1996; Scandinavian . . . Study Group 1994; Shepherd et al., 1995) provide the best estimate of the actual reduction in CHD risk that can be achieved by treating high blood cholesterol. However, the trials reflect the impact of short-term cholesterol lowering only; more benefit should accrue with longer treatment. In most trials, treatment duration was 5 years and the average time to event was 2–3 years (assuming that about half the events occur after the midpoint of the trial). Despite the relatively short exposure to treatment, regression analyses relating the percent cholesterol reduction to risk of CHD predict that for every 10 percent reduction in serum cholesterol, there will be a 15 percent reduction in CHD events (Gould et al., 1998). In the major statin trials the absolute reduction in serum cholesterol (and LDL cholesterol) averaged 45 mg/dL. This corresponds to a 20 percent lowering

in serum cholesterol and resulted in a 30 percent reduction in CHD risk (LaRosa et al., 1999; Gordon 2000). The average reduction in LDL cholesterol was 28 percent; thus in the short term CHD risk will be reduced by 10 percent for every 10 percent that LDL cholesterol is lowered. This relationship holds true for primary and secondary prevention, largely unrelated to baseline levels of serum cholesterol in the trials.

It is conceivable that a longer duration of treatment will result in a further reduction in CHD risk. Ecologic studies (i.e., international comparisons) (Stamler et al., 1986; Law et al., 1994b; Law 1999) suggest that differences in levels of serum cholesterol explain almost all of the differences in CHD rates between populations, and a lifelong exposure to a lower average cholesterol level has a marked effect on lowering CHD risk. Regression equations indicate that a difference in total cholesterol level of 23 mg/dL, or approximately 10 percent for a typical Western population, is accompanied by a 30 percent difference in CHD rates (Law et al., 1994a,b; Law 1999). Cohort studies relating individual serum cholesterol levels to future risk over several decades indicate that a 23 mg/dL (10 percent) decrease in serum cholesterol is associated with a 25 percent reduction in CHD risk (Law 1994b; Law and Wald, 1994; Law 1999). Thus, both ecologic studies and cohort studies suggest a more powerful long-term effect on CHD risk than that found in clinical trials. For a 10 percent reduction in serum cholesterol, the ecologic studies suggest a 30 percent reduction in CHD risk, the cohort studies a 25 percent reduction, and the clinical trials actually found 15 percent. The main reason for this difference is likely to be the duration of exposure to a given cholesterol level. In addition, other favorable lifestyle attributes (especially related to diet and physical activity) that are associated with lower cholesterol levels can reduce risk.

Evidence statements: *In short term, controlled clinical trials, a 1 percent reduction in LDL-cholesterol levels on average reduces risk for hard CHD events (myocardial infarction and CHD death) by approximately 1 percent (A1). Cohort studies suggest that a more prolonged reduction in LDL-cholesterol levels will produce an even greater reduction in CHD risk (C1). In the absence of long-term clinical trials, maximal long-term risk reduction cannot be estimated with certainty.*

11. CHD as a risk indicator

The older literature suggested that having coronary disease increased future CHD event risk approximately 7 fold compared to healthy individuals, with an absolute risk of 50–60 percent per decade (Rossouw et al., 1990; Rossouw 1991). CHD rates and case-fatality rates in the United States and in most other developed countries have fallen considerably over the last two decades (Tunstall-Pedoe et al., 1999; Rosamond et al., 1998). Extrapolating from the in-trial experience, the placebo groups in two recent secondary prevention trials (CARE, LIPID) of persons with "average" cholesterol levels had absolute risks for CHD of about 26 percent per decade (Sacks 1996; Long-Term Intervention . . . Study Group 1998). In 4S, the placebo group had high cholesterol levels and an absolute risk of about 56 percent per decade, while in the VA-HIT population with low HDL-cholesterol levels it was about 43 percent per decade (Scandinavian . . . Study Group 1994; Rubins et al., 1999). In women with existing CHD, rates were similar to men, and older persons had higher rates than younger persons (LaRosa et al.,

1999; Hulley et al., 1998). Given that clinical trial participants are likely to have event rates lower than that of similar persons in the general population (due to the healthy volunteer effect), and that the event rates likely will increase as the participants age beyond the typical 5–6 year trial periods, an event rate of 20 percent per decade in persons with CHD represents a minimum estimate of the absolute annual risk associated with existing CHD. A subgroup of the WOSCOPS men with prior evidence of vascular disease (angina, claudication, stroke, TIA, or ECG abnormalities) had an annual rate of CHD of approximately 26 percent per decade, similar to that observed in the secondary prevention trials of persons with prior myocardial infarction or unstable angina (Shepherd et al., 1995). Persons with stable angina pectoris and persons who have had coronary revascularization procedures also have a 20 percent risk of CHD events over 10 years (Knatterud et al., 2000; Feit et al., 2000; Peduzzi et al., 1998). Thus, it appears that evidence of coronary disease short of clinical MI carries the same future risk for CHD as does MI. In most studies, the minimal rate of recurrent, major coronary events in persons with any clinical evidence of CHD appears to be >20 percent over 10 years.

Evidence statement: *Persons with established CHD in the United States have a risk for recurrent myocardial infarction and CHD death (hard CHD) that exceeds 20 percent per 10 years (C1).*

12. Concept of CHD risk equivalents

Some persons without established CHD will have an absolute, 10-year risk for developing major coronary events (myocardial infarction and coronary death) equal to that of persons with CHD, i.e., >20 percent per 10 years. Such persons can be said to have a *CHD risk equivalent.* These persons belong in a high-risk category for primary prevention. Three groups of persons with CHD risk equivalents are identified.

a. Other forms of clinical atherosclerotic disease

Atherosclerosis is a generalized macrovascular disease. Population-based autopsy studies have demonstrated that atherosclerotic disease in one region of the arterial tree is associated with and predicts disease in other arterial regions. The pathobiology and predisposing risk factors are similar for atherosclerosis in coronary, peripheral, and carotid arteries. Further, there is growing evidence that clinical atherosclerotic disease in non-coronary arteries is a powerful predictor of CHD. However, the conclusion that non-coronary forms of atherosclerosis represent a CHD risk equivalent must be derived from the totality of prospective studies because few if any studies were designed specifically to test this hypothesis. The available data relating non-coronary forms of atherosclerosis to CHD are reviewed in the following discussion.

1) Peripheral arterial disease (PAD)

In Table II.12–1, crude rates of CHD are shown for five studies of persons with atherosclerotic peripheral arterial disease (PAD). The Edinburgh Artery Study (Leng et al., 1996) included 1,592 middle-aged men and women. One third of the persons had established CHD. PAD was diagnosed by the ankle/brachial blood pressure index (ABI). Those with a categorical

abnormality (ABI <0.9) had an annual event rate for major coronary events of 2.4–3.8 percent per year. In the Multicenter Study of Osteoporotic Fractures (Vogt et al., 1993), ABI was measured in 1,027 women without CHD. Those with ABI <0.9 had an annual rate for *total CHD mortality* of 2.9 percent per year. The outcome was similar to that for 495 women with pre-existing CHD. In the San Diego cohort of the Lipid Research Clinic study (Criqui et al., 1985; 1992), persons with documented PAD (without CHD) had a *total CHD mortality* of 2 percent per year. In another cohort of persons of whom 40 percent had co-existing CHD, McKenna et al. (1991) reported a very high CHD mortality for persons with categorically low ABI (≤0.85). A similarly high mortality also was reported by Poulias et al. (1992) in 1,000 persons undergoing aortofemoral bypass. These studies taken together support the concept that PAD, whether diagnosed by ABI, lower limb blood flow studies, or clinical symptoms, is a CHD risk equivalent.

Table II.12–1. Crude CHD Event Rate in Persons with Atherosclerotic Peripheral Artery Disease by Study

Study and Design	Number of Subjects; Ages	Subsequent CHD mortality or event rate
Edinburgh Artery Study (Leng et al., 1996) Ankle/brachial blood pressure index (ABI) in randomly selected population 5 year follow-up	1592 men and women 614 had CHD Ages: 55–74	During follow-up, 137 fatal and nonfatal CHD events occurred. CHD event outcomes per year were: 1.4% in those with ABI >1.1 1.4% in those with ABI 1.1–1.01 1.8% in those with ABI 1.0–0.91 2.4% in those with ABI 0.9–0.71 3.8% in those with ABI <0.7
Multicenter Study of Osteoporotic Fracture (Vogt et al., 1993) ABI testing 4.3 yr follow-up	1027 women without CHD; 495 women with CHD Ages: 65–93	During follow-up, 15 CHD deaths occurred in women without CHD. CHD mortality outcomes per year were: 0.2% for women with normal ABI (>0.9) 2.9% for women with ABI <0.9 During follow-up, 17 CHD deaths occurred in women with CHD. CHD mortality outcomes per year were: 0.7% for women with ABI >0.9 3.0% for women with ABI <0.9
LRC San Diego cohort (Criqui et al., 1985 ; 1992) Noninvasive testing lower limb blood flow 4 yr follow-up (Criqui et al., 1985) 10 yr follow-up (Criqui et al., 1992)	257 men 310 women 31 men and 28 women had CHD Ages: 38–82	During 4 yr follow-up of entire cohort, 17 died of CHD. CHD mortality outcomes per year were: 159 subjects had peripheral vascular disease 2% CHD mortality 408 subjects had normal noninvasive testing 0.1% CHD mortality During 10 yr follow-up of those without baseline CHD, 12 men and 6 women died of CHD. CHD mortality outcomes per year were: 0.4% in men without vascular disease 2.5% in men with peripheral vascular disease 0.2% in women without vascular disease 0.4% in women with peripheral vascular disease
McKenna et al., 1991 Persons underwent ABI for evaluation of peripheral artery disease Average 3 yr follow-up (2–10yr)	744 men and women Ages: 19–89	During follow-up, 101 CHD deaths occurred. CHD mortality outcomes per year were: 2% in persons with ABI >0.85 6% in persons with ABI 0.85 40% of persons with ABI 0.85 had history of CHD; 29% persons with ABI >0.85 had history of CHD.
Poulias et al., 1992 Persons undergoing aortofemoral bypass Follow-up: 1 mo to 20 yr (average 8 yr)	941 men and 59 women Ages: 35–87	During followup, 192 CHD deaths occurred CHD mortality outcome: 2.4%/yr

2) Carotid artery disease

The association between symptomatic carotid disease and future coronary morbidity and mortality derived from sizable reported studies is shown in Table II.12–2a. In the North American Symptomatic Carotid Endarterectomy Trial (NASCET) (Ferguson et al., 1999), symptomatic patients undergoing carotid endarterectomy had an average 10-year CHD mortality of 19 percent. Since coronary mortality is typically 2 to 3 times that of major coronary events, this high mortality is indicative of a CHD risk equivalent. Similarly, in the ECST study (Barnett et al., 1998), symptomatic patients had very high death rates from nonstroke vascular disease, regardless of the percent of carotid artery stenosis at the outset. Finally, Norris et al. (1991) reported a much worse outcome in 696 persons with carotid bruits who were referred for Doppler studies for carotid stenosis. When persons had >75 percent carotid stenosis, rates of transient ischemic attacks (TIAs), stroke, and CHD events were very high (8.3 percent per year for CHD events), and were high even when stenosis was >50 percent. These studies taken together show that persons with symptomatic carotid artery disease are at high risk for major coronary events and so can be considered CHD risk equivalents.

Table II.12–2a. CHD incidence in Symptomatic Carotid Disease

Subjects	Disease severity (% Carotid Stenosis)	CHD deaths	Estimated 10-yr CHD risk
NASCET[†] Cohort of 1,415 patients randomized to carotid endarterectomy Mean age 66 33% current smokers	≥70% (n = 326) 50–69% (n = 858) <50% (n = 1368)	8 yr follow-up all-cause mortality: ≥70% 17% <70% 17% Most of deaths due to CHD	10-yr CHD death = 19%
ECST[‡] Entire cohort of 3,024 patients randomized to surgical vs. medical management Mean age 62 72% males 23% had Hx CAD 53% current smokers	0–19% (n = 140) 20–29% (n =279) 30–39% (n = 339) 40–49% (n = 312) 50–59% (n = 590) 60–69 (n = 369) 70–79% (n = 401) 80–89% (n = 410) 90–100% (n = 178)	All-cause mortality 6 yr follow-up was 27% for both treatment groups. All-cause mortality did not differ by % stenosis: 0–19% (24%) 20–29% (28%) 30–39% (28%) 40–49% (22%) 50–59% (27%) 60–69% (24%) 70–79% (28%) 80–89% (30%) 90–100% (31%)	Since 72% deaths were due to non-stroke vascular disease, 10-year CHD death is estimated at 30%
Norris et al., 1991 Persons with carotid bruits 327 men 369 women 235 had CHD Ages 45–90 Follow-up: 0.5–8 yr (mean 3.4 yr)		During follow-up, 132 CHD events occurred. CHD event rates were: 2.7%/yr for stenosis <50% 6.6%/yr for stenosis 50–75% 8.3%/yr for stenosis ≥75%	

[†] Ferguson et al., 1999

[‡] Barnett et al., 1998; Randomised trial . . . carotid stenosis 1998

Similarly, high CHD event rates have been documented in asymptomatic patients with advanced carotid artery stenosis. The natural history of this association is best illustrated by data from controlled clinical trials evaluating the effectiveness of carotid endarterectomy in these patients. When considering the CHD event or death rates reported for all subjects in the trials listed in Table II.12–2b, it is clear that patients with stenosis >50 percent, even if asymptomatic, have historically high CHD event rates thereby classifying them as a CHD risk equivalent.

Table II.12–2b. Asymptomatic Carotid Disease

Subjects	Disease severity	CHD events	Estimated 10-yr CHD risk
ACAS trial* Entire cohort of 1,662 patients randomized to carotid surgery or medical management; 69% Hx CHD 28% smokers 25% diabetics	Asymptomatic Stenosis ≥60%	2.7 yr follow-up: 84 deaths from MI (n =45) or other cardiac disease	10-yr MI mortality rate 10%; CHD mortality rate 19%
Veterans Affairs Cooperative Study Group† Entire cohort of 444 men Mean age 60 27% Hx MI 50% smokers 30% diabetics All received aspirin therapy	Asymptomatic Stenosis ≥50%	4 yr follow-up: 91 deaths from cardiac causes	10-yr CHD mortality rate 51%
Mayo Asymptomatic Carotid Endarterectomy Study‡ 158 patients 40% Hx CAD 15% diabetics	Asymptomatic Stenosis ≥50% Trial stopped due to high event rate in surgical arm secondary to cessation of medical therapy (aspirin)	2.5 yr follow-up: 12 CHD events	10-yr CHD event rate 30%
CASANOVA¥ 410 patients 42% Hx CAD 26% smokers 30% diabetics	Asymptomatic Stenosis ≥50%	3.5 yr follow-up: 50 deaths due to CHD	10-yr CHD mortality rate 35%

* Executive Committee for the Asymptomatic Carotid Atherosclerosis Study 1995

† Hobson et al., 1993

‡ Mayo Asymptomatic Carotid Endarterectomy Study Group 1992

¥ The CASANOVA Study Group 1991

Finally, other studies (Salonen and Salonen, 1991; Hodis et al., 1998; Chambless et al. 1997; O'Leary et al., 1999) have reported that carotid intimal-medial thickening of the carotid arteries in asymptomatic persons in whom carotid narrowing is <50 percent is still associated with increased risk for CHD. Although asymptomatic thickening of carotid arteries (<50 percent stenosis), in contrast to symptomatic disease and asymptomatic bruits of ≥50 percent stenosis, does not raise risk to the level of a CHD risk equivalent, these studies show that carotid artery atherosclerosis is accompanied by increased risk for new-onset CHD. Therefore measurements of carotid intimal-medial thickening represent an option for adjusting risk and therapies in persons with multiple risk factors (see Section II.5. Emerging Risk Factors).

3) Abdominal aortic aneurysm (AAA)

Limited data are available on the CHD risk in persons with atherosclerotic abdominal aortic aneurysm (AAA). The most complete study is that from Hertzer (1980) who reported the incidence of myocardial infarction following AAA resection in 343 persons followed 6–11 years postoperatively (Table II.12–3). The persons were separated into four groups according to pre-operative history of coronary disease. For persons with no evidence of previous CHD events, CHD mortality averaged 1.9 percent per year. Since the rate of CHD events is at least twice that of CHD mortality, even those without established CHD at time of operation would fall into the category of CHD risk equivalent. An even higher CHD death rate occurs in persons with prior CHD. This study thus supports the concept that AAA is a CHD risk equivalent.

Table II.12–3. Crude CHD Event Rate in Persons with Abdominal Aortic Aneurysm

Study population	N	Subsequent CHD mortality or event rate
Hertzer 1980 Persons operated on for abdominal aortic aneurysm (AAA) Persons separated into four groups based on preoperative CHD history and EKG Endpoint: incidence of fatal MI after surgical recovery: 6–11 yrs follow-up	300 men 43 women with AAA age 45–89y	On follow-up, 62 CHD deaths occurred among the 286 operative survivors. CHD mortality rates per year were: 1.9% in persons with no symptoms, no prior history of CHD, and normal ECG (31%) 2.0% in persons with no symptoms but previous MI by ECG (33%) 3.9% in persons with prior MI by history and ECG (23%) 3.9% in persons with angina/prior MI history but normal ECG (7%)

***Evidence statement**: Clinical forms of non-coronary atherosclerosis carry a risk for clinical CHD approximately equal to that of established CHD and hence constitute a CHD risk equivalent (C1). These conditions include peripheral arterial disease, carotid artery disease (transient ischemic attack or stroke of carotid origin, or >50% stenosis on angiography or ultrasound), and abdominal aortic aneurysm.*

Recommendation: *Persons with clinical forms of non-coronary atherosclerosis should have the same LDL-cholesterol goal (<100 mg/dL) as those for persons with established CHD and should be managed similarly (see Section IV.1).*

b. Diabetes as a CHD risk equivalent

Persons with type 1 or type 2 diabetes are at increased risk for CHD (Kannel and McGee, 1979a,b; Wingard and Barrett-Connor, 1995; Pyörälä et al., 1987). In women with diabetes, relative risk, but seemingly not absolute risk, exceeds that in men with diabetes (Pyörälä et al., 1987). Some of the increased CHD risk in persons with diabetes can be attributed to the major risk factors (Kannel and McGee, 1979a,b; Bierman 1992); other metabolic abnormalities, e.g., hyperglycemia and insulin resistance, probably contribute additional risk. Most literature relating diabetes to CHD risk considers type 2 diabetes, although cardiovascular complications are important for persons with type 1 diabetes as well. Because of the many differences between the two forms of diabetes, it seems appropriate to consider them separately.

Type 2 diabetes. This form of diabetes is characterized by insulin resistance, variable levels of endogenous insulin, and typically, by overweight/obesity and the metabolic syndrome. As hyperglycemia worsens, insulin therapy will become necessary. Persons with type 2 diabetes who are treated with insulin should not be confused with persons having type 1 diabetes who uniformly require insulin. Three lines of evidence support the concept that persons with type 2 diabetes from populations with high-average risk for CHD should be managed as if they have a CHD risk equivalent. But first it should be pointed out that hyperglycemia by itself does not raise risk to the level of a CHD risk equivalent. Instead, type 2 diabetes generally is accompanied by a constellation of metabolic risk factors that combine with hyperglycemia to impart a high risk. Furthermore, beyond having a high risk for first coronary events, persons with diabetes who develop CHD have a relatively poor prognosis for recurrent CHD events and coronary death. It is this constellation of factors rather than a single risk projection that justifies classifying most persons with type 2 diabetes in the United States as CHD risk equivalents. The evidence to support this recommendation will be reviewed.

First, several studies have shown that absolute risk for first major coronary events for persons with type 2 diabetes in high-risk populations approximates that for recurrent events in non-diabetic persons with clinical CHD. For example, in a Finnish population-based study, the seven-year incidence of myocardial infarction (fatal and nonfatal) among 1,373 non-diabetic subjects (ages 45–65 years) with and without prior myocardial infarction at baseline was 18.8 percent and 3.5 percent, respectively ($p<0.001$) (Haffner et al., 1998). In contrast, in 1,059 persons with type 2 diabetes, the seven-year incidence rates of myocardial infarction with and without prior myocardial infarction at baseline were 45.0 percent and 20.2 percent, respectively ($P<0.001$). The hazard ratio for CHD death for diabetic subjects without prior myocardial infarction as compared with non-diabetic subjects with prior myocardial infarction was not significantly different from 1.0 (hazard ratio, 1.4; 95 percent confidence interval, 0.7 to 2.6) after adjustment for age and sex, suggesting similar risk in the two groups. After further adjustment for total cholesterol, hypertension, and smoking, this hazard ratio remained close to 1.0 (hazard ratio, 1.2; 95 percent confidence interval, 0.6 to 2.4). Thus, in the Finnish population, which is known to be

a high-risk population, persons with type 2 diabetes without prior CHD have as high a risk for a myocardial infarction as do persons without diabetes with previous myocardial infarction.

Similar results were obtained from the recent OASIS study (Malmberg et al., 2000). In this study, persons with type 2 diabetes without CHD, average age 65, had rates of CHD events equal to that of persons with established CHD. Moreover, in the HOPE trial (Heart Outcomes Prevention . . . Investigators 2000a), persons with type 2 diabetes without prior cardiovascular disease, but with one or more cardiovascular risk factors, had an annual event rate for CHD of 2.5 percent. The results of these two trials further support the concept that persons with type 2 diabetes, even without clinical CHD, belong in the category of CHD risk equivalent.

In a major clinical trial, the United Kingdom Prospective Diabetes Study (UKPDS), the absolute 10 year risk for hard CHD was between 15 and 20 percent, depending on the subgroup (UK Prospective Diabetes Study [UKPDS] Group 1998a,c,d). Although this percentage was below 20 percent in some subgroups, it must be recognized that the persons in this trial had a diagnosis of diabetes made relatively recently; also, on average they were less obese than most persons with type 2 diabetes in the United States. In those with higher BMIs (>30 kg/m^2), 10-year risk exceeded 20 percent. Finally, it is well known that persons participating in clinical trials manifest a lower risk during the trial than does the population at large. Thus, UKPDS results are consistent with the concept that persons with type 2 diabetes belong in the category of CHD risk equivalent.

Since many persons develop type 2 diabetes after age 65, the question arises whether older persons with diabetes deserve the designation of CHD risk equivalent. Prospective studies (Kannel and McGee, 1979a,b) show that the relative risk for CHD for persons with diabetes versus without diabetes declines with age. Indeed, in a population-based study of older subjects with small numbers of diabetic subjects from Australia, the risk for CHD in non-diabetic subjects with preexisting CHD was greater than in diabetic subjects without preexisting CHD (Simmons and Simmons, 1998). Nonetheless, the combined risk factors of age plus diabetes appear to raise absolute risk for CHD to above 20 percent per decade.

Some persons with type 2 diabetes will not attain a 10-year risk for hard CHD of >20 percent when scored with algorithms from either Framingham (Wilson et al., 1998; Grundy et al., 1999c) or the International Task Force for Prevention of Cardiovascular Disease (Cullen et al., 1998). Such persons usually are younger and do not manifest multiple major risk factors. However, if their risk is projected to age 65, most of them will attain a risk of 20 percent. This high risk for premature CHD justifies more intensive risk reduction therapy earlier in life. On the other hand, in some populations where the baseline risk of coronary heart disease is very low, the presence of adult hyperglycemia weakly predicts CHD. One example includes persons of East Asian ancestry, e.g., China, Japan (Keys et al., 1984). In contrast, type 2 diabetes is accompanied by a very high risk for CHD in persons of South Asian origin.

A second reason for regarding persons with type 2 diabetes as having a CHD risk equivalent is that they have an increased case fatality rate with a myocardial infarction (Abbott et al., 1988; Herlitz et al., 1992; Miettinen et al., 1998). Prevention of myocardial infarction thus becomes a high priority. In one study (Miettinen et al., 1998), the one-year case fatality rate for a first myocardial infarction (from the onset of symptoms, including pre-hospitalization mortality) was

45 percent in men with diabetes and 39 percent in women with diabetes, compared to 38 percent and 25 percent for men and women without diabetes, respectively. Of the persons with diabetes who died, 50 percent of men and 25 percent of women died before hospitalization. Clearly, secondary prevention strategies are inadequate in these persons, and primary prevention is essential.

A third reason to aggressively prevent onset of CHD in persons with diabetes is that their overall prognosis for survival is much worse once they develop CHD than it is for CHD patients without diabetes (Haffner et al., 1998; Behar et al., 1997; Benderly et al., 1997; 1998; Karlson et al., 2000; Gustafsson et al., 2000; Thourani et al., 1999; Herlitz et al., 2000).

Classification of diabetes as a CHD risk equivalent in ATP III implies that enhanced benefit will be achieved from aggressive LDL-lowering therapy. Four studies have examined the benefits of cholesterol lowering with statins on CHD events in subgroups with diabetes (Pyörälä et al., 1997; Haffner et al., 1999b; Goldberg et al., 1998; The Long-Term Intervention with Pravastatin in Ischaemic Disease (LIPID) Study Group 1998; Downs et al., 1998) (see Table II.12–4). All of these studies have shown as much benefit in those with diabetes as in those without diabetes. The 4S, CARE, and LIPID studies were all secondary prevention trials. There were 202 subjects in the 4S with a clinical diagnosis of diabetes (Pyörälä et al., 1997). In this small group of subjects, simvastatin therapy was associated with a 55 percent reduction in major CHD (fatal and nonfatal CHD) ($p=0.002$) as compared with a 32 percent reduction in major CHD in non-diabetic subjects. In a further study of the 4S results (Haffner et al., 1999b) using the current American Diabetes Association criteria (fasting plasma glucose ≥126 mg/dL) an additional 281 diabetic subjects (without a previous diagnosis of diabetes) were identified. In this group simvastatin therapy was associated with a 42 percent reduction in major CHD ($p=0.001$). In the CARE study (Goldberg et al., 1998), 586 subjects with a clinical diagnosis of diabetes were identified. Pravastatin therapy reduced the risk for CHD (fatal plus non-fatal myocardial infarction, CABG and PTCA) by 25 percent in the diabetic group ($p=0.05$) as compared to 23 percent in the non-diabetic group ($p<0.001$). In the LIPID study (Long-Term Intervention . . . Study Group 1998), pravastatin reduced the incidence of fatal and nonfatal CHD by 19 percent in 792 diabetic subjects (p=ns) and 25 percent in the non-diabetic subjects ($p<0.001$). Although the reduction in CHD events in diabetic subjects was not significant with pravastatin, the test for heterogeneity in response between diabetic and non-diabetic subjects was not statistically significant. In AFCAPS/TexCAPS (Downs et al., 1998), a primary prevention study, only 155 subjects had a clinical diagnosis of diabetes. Among this small number of diabetic subjects, a 42 percent reduction in CHD was seen (p=ns) which was similar to the 37 percent reduction in CHD seen in the overall study population. Thus, in post-hoc analysis of all statin trials, there was a strong and consistent trend for benefit of LDL lowering in persons with diabetes.

Table II.12–4. CHD Prevention Trials with Statins in Diabetic Subjects: Subgroup Analysis

Study	Drug	No.	CHD Risk Reduction (Diabetes)	Baseline LDL-C mg/dL (mmol/L)	LDL-C Lowering	CHD Risk Reduction (Overall)	Ref
Primary Prevention							
AFCAPS/ TexCAPS	Lovastatin	239	-43%	150 (3.9)	-25%	-37%	Downs et al.
Secondary Prevention							
CARE	Pravastatin	586	-25% (P=0.05)	136 (3.6)	-28%	-23%	Goldberg et al.
4S	Simvastatin	202	-55% (P=0.002)	186 (4.8)	-36%	-32%	Pyörälä et al.
LIPID	Pravastatin	782	-19%	150* (3.9)	-25% *	-25%	LIPID
4S-Extended	Simvastatin	483	-42% (P=0.001)	186 (4.8)	-36%	-32%	Haffner et al.

* Values for whole group.

Downs et al., 1998; Goldberg et al., 1998; Pyörälä et al., 1997; The Long-Term Intervention . . . (LIPID) 1998; Haffner et al., 1999a.

With the growing prevalence of severe obesity and physical inactivity in the United States, type 2 diabetes has been observed to occur more frequently in young adults and even teenagers (Americn Diabetes Association 2000). It can be expected that early onset of type 2 diabetes will result in premature CHD. Clinical judgment is required to decide whether to manage these persons intensively with LDL-lowering drugs. LDL-lowering drugs need not always be started in young adults with type 2 diabetes. However, once LDL-cholesterol levels reach borderline high levels (130–159 mg/dL) or higher, LDL-lowering drugs become an option for reducing long-term risk. This is particularly so if other risk factors are present.

Persons with type 2 diabetes typically have atherogenic dyslipidemia, which represents a risk factor beyond elevated LDL cholesterol. This form of dyslipidemia in persons with diabetes is often called *diabetic dyslipidemia* which is described in detail in Section VII, Specific Dyslipidemia, along with recommendations for its management.

Type 1 diabetes. Although persons with type 1 diabetes are clearly at increased risk for CHD (Krolewski et al., 1987; Jensen et al., 1987), no study has specifically examined whether type 1 diabetic subjects have a risk of CHD as high as age- and sex-matched non-diabetic subjects with pre-existing CHD. This analysis is difficult to perform because persons with type 1 diabetes often develop diabetes at an early age. The intensity of LDL-lowering therapy therefore depends on clinical judgment. However, the ATP III panel favored starting LDL-lowering drug therapy in persons with type 1 diabetes when LDL-cholesterol levels are $\geq$130 mg/dL.

Evidence statements: *Persons with type 2 diabetes have a 10-year risk for major coronary events (myocardial infarction and CHD death) that approximates the risk in CHD patients without diabetes (A2, C1). This high risk can be explained by the combination of hyperglycemia plus lipid and nonlipid risk factors of the metabolic syndrome. In addition, persons with type 2 diabetes have a high incidence of death at time of acute myocardial infarction as well as a relatively poor prognosis for long-term survival after myocardial infarction (C1). Thus type 2 diabetes constitutes a CHD risk equivalent.*
Recommendations: *Persons with type 2 diabetes should be managed as a CHD risk equivalent. Treatment for LDL cholesterol should follow ATP III recommendations for persons with established CHD (see Section IV.1). For younger persons with type 2 diabetes, who otherwise are at lower risk, clinical judgment is required as to the intensity of LDL-lowering therapy. However, consideration should be given to using LDL-lowering drugs when LDL-cholesterol levels are ≥130 mg/dL.*

Evidence statements*: Persons with type 1 diabetes have increased risk for coronary heart disease. However, some persons with type 1 diabetes have a 10 year risk for CHD less than 15–20 percent (i.e., young persons without other risk factors [A2, C1]). Such persons will nevertheless have a high long-term risk for CHD (C1). Moreover, there is no reason to believe that the benefits of LDL reduction are different in persons with type 1 and type 2 diabetes (D1).*
Recommendations: *The intensity of LDL-lowering therapy in persons with type 1 diabetes should depend on clinical judgment. Recent-onset type 1 diabetes need not be designated a CHD risk equivalent; hence reduction of LDL cholesterol to <130 mg/dL is sufficient. With increasing duration of disease, a lower goal (<100 mg/dL) should be considered. Regardless of duration, LDL-lowering drugs should be considered in combination with lifestyle therapies when LDL-cholesterol levels are ≥130 mg/dL.*

c. High-risk persons with multiple risk factors

Many persons without clinical atherosclerotic disease or diabetes are still at high risk because of advanced coronary atherosclerosis. Those asymptomatic persons who have an absolute, 10-year risk as high as that of persons with established CHD, i.e., >20 percent, can be classified as having a *CHD risk equivalent.* When they are identified, it is appropriate to employ intensive risk-reduction therapy, similar to that used in persons with established CHD. The most reliable method currently available to identify these high-risk persons is assessment of absolute risk with Framingham risk scoring. Persons with CHD risk equivalents will be near the top of the risk spectrum, as determined by the presence of multiple risk factors.

Evidence statement: *Some persons with multiple CHD risk factors have an absolute 10-year risk for major coronary events (myocardial infarction and CHD death) of >20 percent (CHD risk equivalent) (C1).*

Recommendation: *For persons with CHD risk equivalents, the same recommendations should apply as for persons with established CHD (see Section IV.1).*

13. Models for clinical intervention: role of multidisciplinary team

Although epidemiology and clinical trials reveal the power of clinical intervention for both primary and secondary prevention, implementation of prevention guidelines has been less than optimal (Bowker et al., 1996; Pearson 2000). This deficiency is due in part to a structure of clinical management that is not designed for optimal preventive strategies. Successful prevention in clinical practice requires a multi-disciplinary team of health care professionals. The optimal organization of this team may well be a "lipid clinic" or "preventive cardiology clinic," but ATP III guidelines are designed so that primary care physicians can implement them in office practice.

Regardless of the clinical structure, implementation of ATP III guidelines is the responsibility not only of physicians, but also of registered dietitians and other qualified nutritionists, nurses, physician assistants, pharmacists, and other health professionals who must work together as a team in educating, treating, and following up each patient. There is consistent evidence from randomized trials demonstrating that approaches using a multidisciplinary team for the management of high serum cholesterol improve patient compliance, enlarge the scope of the population served, and improve the effectiveness of the guidelines (Becker et al., 1998; Blair et al., 1988; Debusk et al., 1994; Fonorow and Gawlinski, 2000; Hoogwerf et al., 1999a; LaBresh et al., 2000; Schectman et al., 1996; Shaffer and Wexler, 1995; Stuart-Shor et al., 1999; Thomas 1997; Urquhart 1995). There are an estimated 70,000 nutrition professionals (75 percent registered dietitians), 2.6 million registered nurses, and 190,000 pharmacists (80 percent in practice settings), and an increasing number of health educators. A team approach can be used to optimize education, monitoring, and follow-up. Physicians should identify a management strategy and work in concert with a health professional team to address the areas of diet, physical activity, and assistance with adherence enhancement. The multiple intervention strategies that can be employed when a multidisciplinary team approach is used offer persons optimal support for life-habit change. Finally, the success of ATP III's recommendations requires full participation of the patient, who must adopt and adhere to therapeutic modalities—whether life habit changes or drug therapy.

Evidence statement: *Use of a multidisciplinary team for management of high serum cholesterol improves patient compliance, enlarges the scope of the population served, and improves compliance to treatment guidelines (A2).*

Recommendation: *Physicians have a primary responsibility for implementing ATP III guidelines. In addition, a multidisciplinary team, potentially including nurses, dietitians, nurse practitioners, pharmacists, and health educators, should be utilized whenever possible.*

14. Cost-effectiveness issues

This section examines the issue of cost effectiveness of LDL-lowering therapy in the United States at the present time, and it considers changes that are likely to occur in the next few years. Costs and cost effectiveness of LDL-lowering therapy must be put into the context of the total costs of CHD and CVD. At present, direct medical costs for diagnosis and management of CVD in the United States exceed $100 billion annually. Similar amounts are lost in reduced productivity. Prevention of CHD with LDL-lowering therapy will reduce some of these costs. The most cost-effective approach to prevention of CHD is population intervention: diet modification, exercise, and weight control combined with smoking avoidance and cessation (Prosser et al., 2000). These approaches are safe, incur few direct costs, and offer benefits beyond CHD reduction. Clinical interventions to reduce LDL-cholesterol levels, the subject of ATP III, are less cost effective, but can be justified on other grounds in higher risk persons. The introduction of safe and effective LDL-lowering drugs makes clinical intervention attractive for higher risk persons. Nonetheless, the costs of drug therapy are the dominant factor determining cost-effectiveness of the clinical approach to cholesterol reduction.

Another major factor influencing cost-effectiveness of LDL-lowering therapy for individuals is absolute risk for CHD. Cost-effectiveness is greater for those at highest short-term risk and decreases progressively as risk of suffering a coronary event falls. Recently, clinical trials have revealed that LDL-lowering therapy will reduce relative risk for CHD at all absolute-risk levels. This fact heightens the importance of cost effectiveness analysis for selection of appropriate persons for clinical intervention. Whereas LDL-lowering therapy is efficacious to further reduce relative risk in lower risk persons, it is not necessarily cost effective by current standards.

a. Purpose of cost-effectiveness analysis of LDL-lowering therapy

Relative-risk reduction accompanying reduction of LDL levels at all levels of absolute risk opens the door to widespread use of LDL-lowering drugs. In fact, use of these drugs could easily rival that of drug therapy for hypertension in the United States. At present approximately 50 million Americans are candidates for antihypertensive drugs and approximately 25 million of these people are taking antihypertensive drugs (JNC VI 1997; Joint National Committee . . . 1997). The widespread use of LDL-lowering drugs, although potentially effective in reducing the burden of CHD in the United States, would be costly. The fundamental rationale for assessment of economic consequences of LDL-lowering drugs is the reality that resources are limited, whereas demand for medical therapies always exceeds available public resources. Consequently, difficult choices often must be made among potentially beneficial interventions. Resources are best allocated according to potential alternative uses. Evidence of efficacy and safety of drug therapy, a requirement for clinical intervention, is insufficient to make recommendations for drug use in a cost-constrained society. This is particularly true when many millions of persons are potential recipients of the therapy. Limited resources should be targeted to where they provide the greatest health benefits. One of the major objectives of cost-effectiveness analysis is to facilitate patient selection so that incremental benefits are greatest relative to incremental costs. Thus, for LDL-lowering therapy to be widely used in the U.S. population, it must be cost-effective by current standards.

Cost-effectiveness analysis of LDL-lowering therapy compares its incremental costs with alternative interventions and their incremental benefits. Assessment of cost-effectiveness is inherently relative, i.e., it requires comparison of costs and health outcomes among alternative interventions (including no intervention). The metric used is incremental cost-effectiveness, which is the additional cost required to attain an additional unit of benefit. The reason for assessing cost-effectiveness is not that a particular health benefit is not worth paying for in an absolute sense; instead, spending money for medical, health care, and other societal needs in other ways might benefit individuals or society more. Although intensive LDL-lowering therapy is attractive because it clearly reduces risk for CHD, cholesterol-lowering drugs are relatively expensive. For this reason, drug therapy is a prime subject for cost-effectiveness analysis, and for comparison with other accepted modalities of medical practice. For comparison, cost-effectiveness estimates of currently used diagnostics and therapies in medical practice are shown in Table II.14–1.

Table II.14–1. Cost Effectiveness of Common Diagnostic or Therapeutic Modalities*

Diagnostic or Therapeutic Modality	Cost Effectiveness Range† (dollars per year of life saved)
Antihypertensive therapy	$4,000 to $93,000
Screening mammography	$1,000 to $190,000
Renal dialysis	$20,000 to $79,000
Coronary artery by-pass surgery (left main disease/three-vessel disease)	$2,300 to $27,000
Exercise to prevent CHD	Cost-saving to $38,000
Aspirin to prevent CHD	Cost-saving to $5,000
Smoking cessation to prevent CHD	Cost-saving to $13,000

* Major source references:

Neumann et al., 2000; Stone et al., 2000; Tengs et al., 1995

Other references:

Barosi et al., 1997; Boer et al., 1999; Bulgin 1981; Buxton and West, 1975; Christie 1977; Churchill et al., 1984; Croghan et al., 1997; Cromwell et al., 1997; Cummings et al., 1989; de Koning et al., 1991; Douzdjian et al., 1998; Eccles et al., 1998; Eddy et al., 1988; Edelson et al., 1990; Fiscella and Franks, 1996; Gyrd-Hansen 1999; Harvald et al.,1983; Hatziandreu et al., 1988; Hlatky et al., 1997; Hristova, Hakama 1997; Johannesson et al., 1995; Johannesson et al., 1993; Johannesson et al., 1997b; Johannesson 1996; Johannesson 1994; Jones, Eaton 1994; Kerlikowske et al., 1999; Klarman et al., 1968; Knox 1988; Kodlin 1972; Kristein 1977; Krumholz et al., 1993; Lai et al., 1998; Leivo et al., 1999; Lindfors, Rosenquist 1995; Lindholm, Johannesson 1995; Littenberg et al., 1990; Ludbrook 1981; Mandelblatt et al., 1997; Marks et al., 1990; Meenan et al., 1998; Moskowitz, Fox 1979; Munro et al., 1997; Okubo et al., 1991; Oster et al., 1986; Pearson et al., 1976; Roberts et al., 1980; Rosenquist, Lindfors 1994; Salzmann et al., 1997; Secker-Walker et al., 1997; Shepard et al., 1995; Simon 1986; Simpson, Snyder 1991; Smith 1968; Sollano et al., 1998; Stange, Sumner 1978; Stason, Weinstein 1977; Streitz et al., 1998; Tsevat 1992; van der Maas et al., 1989; Warner et al., 1996; Wasley et al., 1997; Weinstein and Stason, 1982; Williams 1985.

† Rounded to closest thousands

b. Approaches to estimating cost-effectiveness of cholesterol-lowering therapies

Effectiveness analysis assesses net health benefit. For CHD prevention, effectiveness consists of extended survival, reduced morbidity, and enhanced quality of life. Effectiveness is generally expressed in terms of years of life gained or, preferably, quality adjusted years of life (QALY) gained. With the QALY measure, length of survival is weighted by the quality of survival.

Aspects of quality of life attributable to cholesterol reduction include improvements in functional status and reductions in the anxiety and disutility that accompany all CHD events.

Cost refers to net cost of health care resources consumed. LDL reduction includes the costs of physician services, counseling, tests for screening, case finding and monitoring, drugs, and the treatment of side effects. Subtracted from these costs are savings from reductions in medical care resources utilized to manage CHD sequelae. For LDL lowering, these cost offsets include savings from decreased hospital and ambulatory services for angina, myocardial infarction, revascularization procedures, stroke, and heart failure. Cost offsets also include savings from decreased economic losses secondary to increased gainful employment and productivity resulting from reduced CHD morbidity and mortality. The benefits of reducing LDL cholesterol are reflected in cost-effectiveness analyses in three ways: (1) Direct economic savings offset costs of LDL reduction, (2) avoidance of CHD mortality means a gain in survival, and (3) avoidance of the disability, distress, and pain from CHD counts as an increase in quality-adjusted life expectancy.

Several approaches to cost-effectiveness analysis of LDL lowering have been taken. Raw data for these analyses include estimates of risk based on Framingham risk scores and the results of clinical trials of cholesterol-lowering therapy in different population groups. Some investigators use sophisticated, complex, state-transition models to simulate the natural history of disease (Prosser et al., 2000). This approach attempts to incorporate and integrate data from the best available sources, including observational cohorts and health care administrative data in addition to clinical trials. Many factors are taken into account when developing the economic model (Table II.14–2). An alternate approach is to simplify the analyses to include only the essential factors (Caro et al., 1997). Here the major costs (e.g., drugs) are compared to savings from prevention of disease. Although the latter analysis does not include all the “hidden costs” of therapy, they show the “bare bones” cost-effectiveness of the simplest model for clinical intervention, namely, identification of the person at risk for CHD and initiation of life-time drug therapy without follow-up or monitoring. Of course, if the intervention algorithm of ATP III were to be followed rigorously, many of these factors shown in Table II.14–2 would have to be taken into account in the analysis. Nonetheless, in many cases, realities of clinical practice will constrain intervention over time towards the simplest model. These variations in actual practice account for some of the difficulties in making reliable estimates of cost effectiveness of LDL-lowering drugs.

Table II.14–2. Assumptions Used in Cost-Effectiveness Analyses of LDL-lowering Drugs*

- Efficacy of drug therapy
- Price of drugs (with or without wholesale discounts)
- Lag time between institution of therapy and first benefit (e.g., two years)
- Baseline risk of population
- Impact of individual risk factors on CHD risk
- Extrapolation of clinical trial results to the general population
- Prior dietary therapy before initiation of drug therapy (lessening cost effectiveness of drugs)
- Prior treatment with less expensive drugs (e.g., nicotinic acid) before starting more expensive drugs (e.g., statins) (lessening cost effectiveness of more expensive drugs)
- End points selected for cost-effectiveness analysis (e.g., morbidity reduction, life years gained, quality adjusted life years [QALY] gained)
- Projections of efficacy of secondary prevention measures (to extend life) after failure of primary prevention
- Coexisting primary and secondary prevention measures (e.g., aspirin prophylaxis)
- Quality of life adjustments
- Time discounting of benefits, risks and costs
- Methods adjustments for quality of life years
- Costs of treating new-onset CHD and sequelae
- Projected morbidity and mortality outcomes after onset of CHD
- Frequency and costs of physician visits for monitoring
- Adherence/compliance characteristics of population
- Thresholds for acceptable costs per year of life saved
- Country-specific costs

* Prosser et al., 2000

Cost-effectiveness analysis is complicated by variability in the health care delivery system, including drug prescription plans. Individuals with similar biological risk and clinical benefit face very different cost-effectiveness scenarios depending on resource prices, financial structure of medical plans, and subjective valuation of health resources. On the basis of the aggregate clinical experience of the clinicians on the panel, it was noted that, depending on the payment scheme, the annual costs of statin drugs can vary from $100 to $1000. This difference alone imparts an almost 10-fold difference in cost effectiveness for cholesterol-lowering therapy.

Beyond theoretical analyses, natural tensions exist at the level of the individual—both physician and patient. Health insurance programs seek to minimize payer costs, individuals desire to maximize their benefits relative to their health insurance and out-of-pocket payments, and physicians must make treatment decisions that optimize benefits to individuals without exceeding the bounds imposed by the insurance plan. In some cases, clinical judgment will push beyond payer controls; clinical treatment decisions must be individualized and guided by local

conditions and patient preferences. Moreover, cost-effectiveness constraints need to be reassessed as either clinical or economic data change.

c. Criteria for cost-effectiveness therapies

There are no explicit criteria for what is or is not cost-effective (Weinstein 1995; Tengs et al., 1995; Tengs and Wallace, 2000). Acceptable thresholds for cost-effectiveness are a reflection of available resources and cultural, social, political and individual values. The best situation occurs when an intervention both improves health and saves money. However, most commonly the costs of interventions that improve health outcomes are only partially offset by such savings. Empirically, the literature on cost-effectiveness indicates that most commonly accepted medical interventions in the United States have incremental cost per QALY gained below $50,000–$75,000 (Table II.14–1). Generally, interventions are considered highly cost-effective when the cost per QALY gained is below $20,000–$25,000, moderately high in cost-effectiveness when the cost per QALY is between $25,000–$50,000, borderline cost-effective when the cost per QALY is between $50,000–$100,000, and generally not cost-effective as the cost per QALY further increases. Clinical trial information on the impact of LDL lowering on functional status and quality of life is limited. Thus, it is difficult to directly weigh non-fatal outcomes and thereby assess cost per QALY. Economic analyses of persons with elevated cholesterol are further limited by restriction of measured resource use to a subset of cardiac services (most commonly revascularization procedures and CHD-related hospitalizations).

d. Cost effectiveness analysis for LDL lowering for secondary prevention (persons with established CHD)

Individuals with CHD are at high risk for subsequent major coronary events. They have a >2 percent annual risk for experiencing myocardial infarction or CHD death and approximately 4 percent annual risk for these events plus unstable angina and coronary revascularization. Cost effectiveness of secondary prevention has been estimated largely from the results of large, randomized clinical trials (Pedersen et al., 1996; Johannesson et al., 1997a; Glasziou et al., 1998; Ashraf et al., 1996; Grover et al., 1999; Tsevat et al., 2001). Among these trials, the very high risk of participants in the 4S trial made statin therapy highly cost effective (Pedersen et al., 1996). In the 4S placebo group, estimated 10-year risk for hard CHD events (myocardial infarction and CHD death) was about 36 percent. Several independent analyses applied to the trial as a whole indicated that costs per QALY average at current retail prices of drugs to be about $10,000 (Pedersen et al., 1996; Schwartz et al., 1997; Johannesson et al., 1997a; Grover et al., 1999; Prosser et al., 2000) Some investigators note nonetheless that even among persons with CHD, inherent risk for future CHD varies. Although cost-effectiveness analysis of subgroups of clinical trials is always problematic, ranges in cost-effectiveness have been reported, as exemplified by the recent analysis of the 4S trial by Prosser et al. (Table II.14–3). In two other secondary prevention trials (CARE, LIPID), 10-year risk for hard CHD was lower than that for the 4S trial, i.e., about 26 percent. It can be expected that cost-effectiveness analysis of these trials will reveal a higher cost per QALY gained than for the 4S trial (Goldman et al., 1999; Prosser et al., 2000). For example, in other trials of pravastatin therapy (PLAC I and PLAC II), one analysis (Muls et al., 1998) estimated costs per QALY saved in populations similar to that of CARE and LIPID to average about $25,000 at 1997–1998 drug prices. Also, Tsevat et al. (2001)

report for the CARE study that treatment with pravastatin increased quality-adjusted life expectancy at an incremental cost of $16,000 to $32,000 (average $24,000) per QALY gained. This value also is consistent with the variable cost-effectiveness within subgroups of persons with established CHD reported by Goldman et al., 1999 and Prosser et al., 2000.

Table II.14–3. Cost-Effectiveness Estimates of the 4S Trial by Gender and Age*

Costs ($) Per QALY Gained					
Group	**Age 35–44 y**	**Age 45–54 y**	**Age 55–64 y**	**Age 65–74 y**	**Age 75–84 y**
Men	4,500	1,800	3,900	6,700	9,900
Women	40,000	8,100	8,400	9,500	11,000

* Prosser et al., 2000

e. Cost effectiveness analysis in persons with CHD risk equivalents

Direct evidence of cost-effectiveness from randomized clinical trials is not available for persons with CHD risk equivalents. However, randomized trials and economic decision models consistently have confirmed that clinical benefit and cost-effectiveness are a function of population baseline risk. Models indicate that the cost-effectiveness of treating CHD risk equivalent populations is similar to that of those with symptomatic CHD (Glick et al., 1992; Goldman et al., 1999; Prosser et al., 2000). Thus, although the strength of evidence is somewhat less, cholesterol reduction in CHD risk equivalent populations is expected to exhibit the same degree of cost-effectiveness as observed in the clinical trials of secondary prevention.

f. Cost effectiveness of primary prevention

1) Cost effectiveness of dietary therapy for primary prevention

According to the analysis performed by Prosser et al. (2000), dietary therapy is more cost-effective than drug therapy for primary prevention. When the same assumptions are applied to dietary as to statin drug therapy, the costs per QALY gained usually are below $50,000 for persons with elevated LDL cholesterol and multiple risk factors. Prosser et al. (2000) also examined the cost-effectiveness of combining dietary therapy with an inexpensive drug (nicotinic acid). This combination enhanced the cost-effectiveness of therapy and eroded the incremental cost-effectiveness of statin therapy. A similar improvement in cost-effectiveness likely would result from combining dietary therapy with other therapeutic dietary options for LDL lowering (e.g., plant stanols/sterols and increased viscous fiber [see Section V]).

2) Cost effectiveness of drug therapy for short-term primary prevention

All interventions with drugs incur costs and have the potential for risk as well as benefit. Thus, evidence of demonstrated benefit is especially important before recommending primary prevention on a population basis, where individual benefits are reduced relative to secondary prevention. Primary prevention encompasses an extremely broad spectrum of CHD risk, and cost-effectiveness of drug therapy declines in direct relation to baseline population risk.

Evidence of the cost-effectiveness of drugs in primary prevention among people at moderate-to-high risk for CHD events is available from two sources: WOSCOPS and a series of economic decision models.

3) Cost-effectiveness for primary prevention based on WOSCOPS results

The West of Scotland Coronary Prevention Study (WOSCOPS) provides the best source of data from which to estimate cost effectiveness for primary prevention among individuals at higher risk for CHD events. As indicated by the event rate in the placebo group, WOSCOPS participants had an estimated 10-year risk for myocardial infarction and CHD death (hard CHD) of about 15 percent. A cost-effectiveness analysis was performed based on clinical resource use and costs observed in the WOSCOPS trial (Caro et al., 1997). As with the cost-effectiveness analyses of the other large statin trials, a Markov model was used to estimate the effects of alternative assumptions regarding long-term benefit of pravastatin therapy and a range of discount rates on expected number of people making the transition to symptomatic cardiovascular disease, survival, and recurrent coronary heart disease events for each treatment strategy beyond the trial period. Impact on quality of life was not estimated. Costs and benefits were discounted at 6 percent per year in the base case analysis. Incremental cost per year of life gained for the WOSCOPS cohort as a whole was estimated to be approximately $30,000 (UK costs and currency converted to dollars), ranging from approximately $19,000–$55,000, depending on assumptions used in various sensitivity analyses. These analyses incorporated only the initial management of CHD events; consideration of subsequent costs resulting from a CHD event would have resulted in somewhat improved estimates of cost-effectiveness. Based on analysis of the WOSCOPS trial, a reasonable estimate of costs per QALY saved at current retail drug prices of subjects with a 10-year risk of 15 percent would be about $50,000. A similar result was obtained by Morris (1997).

Estimates of cost-effectiveness from clinical trials in subgroups that are at variable risk are less reliable than for the whole cohort, but can be informative nonetheless. In WOSCOPS, restriction of statin therapy to the 25 percent of participants with a risk for hard CHD of >2 percent per year, who incurred 45 percent of all CHD events, revealed an incremental cost per additional year of life gained of approximately $20,000 (Caro et al., 1997; Shepherd 1998). This estimate clearly differs from that of the lowest-risk quartile of subjects, which had a risk for hard CHD of about 1 percent per year. A formal cost-effectiveness analysis has not been presented for this study population subgroup. However, extrapolation of the published WOSCOPS cost-effectiveness analysis to this subgroup yields an incremental cost per additional year of life gained of approximately $100,000, assuming statin therapy costs of about $1,000 per year.

4) Cost effectiveness of primary prevention based on the AFCAPS/TexCAPS trial

The AFCAPS/TexCAPS trial (Downs et al., 1998) studied the effectiveness of statins for risk reduction in participants with only borderline-high risk. Although statin therapy proved to be efficacious for reducing major coronary events, a comparison of AFCAPS/TexCAPS with other trials is hampered by the fact that the primary endpoint included unstable angina in addition to myocardial infarction and CHD death. Thus, the primary clinical endpoint differed from those of other trials in which major coronary events included only myocardial infarction and CHD death. In AFCAPS/TexCAPS, CHD rates in the placebo group were about 1.09 percent per year, with

unstable angina accounting for a significant half of all "major coronary events." From a purely economic point of view, differences between unstable angina and myocardial infarction are not substantial; costs incurred by hospitalization for unstable angina are similar in magnitude to those for myocardial infarction. However, total CHD events were incorporated into the WOSCOPS cost-effectiveness analysis described above rather than hard CHD only. Using WOSCOPS criteria for analysis, incremental cost per additional year of life gained would be >$100,000 for the whole cohort of AFCAPS/TexCAPS. For the higher risk subgroups, however, costs could be lower.

5) Cost-effectiveness in long-term primary prevention

Primary prevention aims to reduce risk for CHD in the long term as well as in the short term. The public health approach to long-term primary prevention generally is considered to have a favorable incremental cost-effectiveness ratio. However, at current retail drug prices, drug treatment for primary prevention in persons whose 10-year risk is <10 percent may not be considered cost effective, i.e., it would exceed $100,000 per QALY saved (Caro et al., 1997; Goldman et al., 1999; Prosser et al., 2000). Nonetheless, ATP III recommends consideration of drug therapy in lower risk persons (0–1 risk factor) whose LDL-cholesterol levels are very high (≥190 mg/dL) and in persons with multiple risk factors whose LDL-cholesterol concentrations are high (≥160 mg/dL); these recommendations include a trial of dietary therapy before drug consideration. The recommendation represents the attempt to achieve an appropriate balance between risk and costs. CHD is the foremost killer of Americans. Moreover, persons with elevated LDL cholesterol are at high long-term risk for CHD (see Table II.7–3 and Figure II.7–1). These facts must weigh against the costs of long-term drug therapy. In addition, the costs of drug therapy are difficult to judge. Many payment plans provide LDL-lowering drugs at prices below retail prices. Further, loss of patent protection and increased market competition likely will markedly reduce the prices of drugs over the long term. With each price reduction, cost effectiveness will increase. ATP III recommendations for long-term primary prevention reflect the considered judgment of the expert panel for the optimal management of persons with elevated LDL cholesterol. The recommendations attempt to balance benefit against costs, and it must be noted that several other approaches that were potentially beneficial but still more costly were rejected.

g. Summary

Cost-effectiveness is directly related to baseline population risk and inversely related to drug cost per unit of LDL lowering. As baseline risk increases and effective drug cost decreases, cholesterol lowering with statins becomes more cost effective. Cost-effectiveness also is a function of the time course of outcomes and costs. Cost-effectiveness becomes progressively more attractive as the overall risk of CHD events increases. Secondary prevention is clearly cost-effective, and almost always more cost-effective than primary prevention, except when the latter is applied to people whose risk of experiencing a first CHD event, e.g., diabetics, is equivalent to that of a recurrent event in those who already have clinical manifestations of CHD. Using common reference standard criteria, LDL lowering using statin therapy is very cost-effective for people with symptomatic CHD. Cost-effectiveness is similar for those with CHD risk comparable to that of people with prior CHD events (CHD risk equivalents). Cholesterol lowering certainly is cost-effective, and perhaps even cost saving, in the highest risk CHD

populations (diabetes mellitus with prior CHD events) and in high-risk populations with access to low acquisition cost drugs (as commonly negotiated by large managed care organizations and pharmacy benefit managers).

As baseline population risk declines, so does cost effectiveness. LDL lowering is cost-effective for primary prevention in higher-risk persons; at lower ranges of 10-year risk, it is not. Regardless, cost effectiveness is highly dependent on drug prices. This is illustrated by the projected progressive reduction of costs per QALY saved at each decrement in costs (Table II.14–4). Estimates shown in Table II.14–4 are based on cost-effectiveness analysis of recent clinical trials of LDL-lowering therapy described in the preceding discussion. They assume that costs per QALY gained are largely dependent on the costs of drugs. They also show an exponential rise in costs at lower absolute-risk levels as described by Hay et al. (1999).

Table II.14–4. Dependence of Cost Effectiveness on Costs of LDL-Lowering Drugs*

	Estimated Cost Effectiveness of LDL-Lowering Therapy (costs per QALY gained) at Different Costs of LDL-Lowering Drugs			
10-year risk†	$1000 per year	$500 per year	$250 per year	$125 per year
35%	10,000	5,000	2,500	1,250
25%	25,000	12,500	6,250	3, 125
15%	50,000	25,000	12,500	6,250
10%	100,000	50,000	25,000	12,500
5%	200,000	100,000	50,000	25,000

* Table developed from aggregate data available in existing literature (Pedersen et al., 1996; Johanneson et al., 1997; Glasziou et al., 1998; Ashraf et al., 1996; Grover et al., 1999; Tsevat et al., in Press; Schwartz et al., 1997; Prosser et al., 2000; Caro et al., 1997; Morris 1997; Hay et al., 1999)

† Risk expressed as 10-year risk for hard CHD (myocardial infarction + coronary death)

Specific ATP III guidelines for LDL-lowering therapy are influenced by cost-effectiveness analysis. However, they are made with the recognition that drug prices vary widely under different health care payment plans in the United States. In addition, it is noted that drug costs will likely decline in the future. For these reasons, guidelines for the American population cannot be as rigidly cost-dependent as in some other countries where there is a single-payment health care system and where costs of medication are relatively fixed and highly regulated.

Evidence statement: *At current retail drug prices, LDL-lowering drug therapy is highly cost effective in persons with established CHD (A1)*
Evidence statement: *LDL-lowering drug therapy is cost effective for primary prevention in persons with CHD risk equivalents (C1).*
Evidence statement: *At current retail drug prices, when 10-year risk for hard CHD (myocardial infarction + CHD death) is in the range of 10–20 percent per year, LDL-lowering drug therapy carries an acceptable cost-effectiveness (by current cost-effectiveness standards in the United States) (B1).*

Evidence statement: *At current retail drug prices, when 10-year risk for hard CHD (myocardial infarction + CHD death) is <10 percent per year, the cost-effectiveness of LDL-lowering drug therapy exceeds current cost-effectiveness standards in the United States (A2).*
Recommendation: *When 10-year risk for hard CHD is <10 percent per year, LDL-lowering drugs should be used judiciously. Priority should be given to dietary therapy, which is more cost effective. However, if LDL-cholesterol levels remain ≥160 mg/dL after dietary therapy in persons with 10-year risk <10 percent, LDL-lowering drugs should be considered if long-term risk for CHD is deemed to be high, i.e., if multiple major risk factors are present. When LDL-cholesterol levels are ≥190 mg/dL after dietary therapy, long-term risk is considered to be high regardless of other risk factors; thus LDL-lowering drugs should be considered. The need to reduce long-term risk in some circumstances can override the need to stay within currently acceptable cost-effectiveness criteria.*

III. Detection and Evaluation

ATP III recognizes that detection of cholesterol disorders and other coronary heart disease (CHD) risk factors occurs primarily through clinical case finding. Risk factors can be detected and evaluated as part of a person's work-up for any medical problem. Alternatively, public screening programs can identify risk factors, provided that affected individuals are appropriately referred for physician attention. The identification of cholesterol disorders in the setting of a medical examination has the advantage that other cardiovascular risk factors—including prior CHD, PVD, stroke, age, gender, family history, cigarette smoking, high blood pressure, diabetes mellitus, obesity, physical inactivity—co-morbidities, and other factors can be assessed and considered prior to treatment.

At the time of physician evaluation, the person's overall risk status is assessed. Thus, detection and evaluation of cholesterol and lipoprotein problems should proceed in parallel with risk assessment for CHD. The approach to both is described below.

1. Identification of risk categories for setting of LDL-cholesterol goals

The guiding principle of ATP III is that the intensity of LDL-lowering therapy should be adjusted to the individual's absolute risk for CHD. In applying this principle, ATP III maintains that both short-term (≤10-year) and long-term (>10-year) risk must be taken into consideration. Thus, treatment guidelines are designed to incorporate risk reduction for both short-term and long-term risk (composite risk). ATP III identifies three categories of risk for CHD that modify goals and modalities of LDL-lowering therapy: established CHD and CHD risk equivalents, multiple (2+) risk factors, and 0–1 risk factor (Table III.1–1).

Table III.1–1. Categories of Risk for Coronary Heart Disease (CHD)

Risk Categories
Established CHD & CHD risk equivalents
Multiple (2+) risk factors
0–1 risk factor

a. Identification of persons with CHD and CHD risk equivalent

Coronary heart disease. Persons with CHD are at very high risk for future CHD events (10-year risk >20 percent). Several clinical patterns constitute a diagnosis of CHD; these include history of acute myocardial infarction, evidence of silent myocardial infarction or myocardial ischemia, history of unstable angina and stable angina pectoris, and history of coronary procedures (coronary angioplasty and coronary artery surgery).

Other clinical atherosclerotic diseases. Persons in this subcategory have a CHD risk equivalent. Included are those with peripheral arterial disease, abdominal aortic aneurysm, carotid artery disease (symptomatic [e.g., transient ischemic attack or stroke of carotid origin] or

>50 percent stenosis on angiography or ultrasound), and likely other forms of clinical atherosclerotic disease (e.g., renal artery disease).

Diabetes mellitus. ATP III counts diabetes as a CHD risk. The current criteria for the diagnosis of type 2 diabetes from the American Diabetes Association (ADA) are a fasting plasma glucose ≥126 mg/dL and/or 2-hour plasma glucose (after a standard 75 mg glucose load) ≥200 mg/dL (American Diabetes Association 1998). The current ADA recommendations de-emphasize the oral glucose tolerance test in routine clinical care, so it is expected that most people with diabetes will be diagnosed by a fasting glucose level.

Multiple risk factors (10-year risk for CHD >20 percent). Based on 10-year risk assessment using Framingham scoring (see below), a person in this category can be said to have a CHD risk equivalent.

b. Risk assessment in persons without CHD or CHD risk equivalents (starting with risk factor counting)

ATP III's primary approach to risk assessment for persons without CHD or CHD risk equivalents is to count the number of major risk factors for CHD. For persons with multiple (2+) risk factors, a second step is to carry out 10-year risk assessment for CHD. There are two essential reasons for estimating 10-year risk in persons with multiple risk factors: (a) to identify those who have a 10-year risk >20 percent (CHD risk equivalent), and (b) to identify those with borderline high LDL cholesterol who have a 10-year risk of 10–20 percent. Both groups are candidates for more intensive LDL-lowering therapy than was recommended in ATP II.

An alternative approach, which gives similar though not identical results, is to begin with 10-year risk assessment, followed by counting of risk factors in persons with a 10-year risk for CHD <10 percent. This sequence is recommended by advocates of "global risk assessment." The sequence of risk assessment depends on personal choice. It should be noted that beginning with 10-year risk assessment is consistent with approaches recently proposed in other guidelines. Nevertheless, ATP III stratifies risk below 10 percent on the basis of the number of risk factors and not on projected 10-year risk.

The major independent risk factors identified in risk factor counting include:

- Cigarette smoking
- Hypertension (BP ≥140/90 mm Hg or on antihypertensive medication)
- Low HDL cholesterol (<40 mg/dL)
- Family history of premature CHD (CHD in male first-degree relative <55 years; CHD in female first-degree relative <65 years)
- Age (men ≥45 years; women ≥55 years)

If a person has a high HDL cholesterol (≥60 mg/dL), one risk factor is subtracted from the count. If the person has type 2 diabetes, this person is classified as having a CHD risk equivalent (see Section II.12.b).

1) Identification of persons with multiple (2+) risk factors

The second risk category that modifies LDL goals includes persons with multiple (2+) risk factors. Approaches to clinical evaluation of risk factors that define the person with multiple (2+) risk factors are shown in Table III.1–2.

Table III.1–2. Clinical Evaluation to Identify Persons with Multiple (2+) Risk Factors

Risk factor	Definition	Comments
Cigarette smoking	Any cigarette smoking in the past month	
Hypertension	Blood pressure ≥140/90 mm Hg or taking antihypertensive medications	Multiple measures of blood pressure required for diagnosis (see JNC VI for further clinical evaluation) (JNC VI 1997; Joint National Committee . . . 1997)
Low HDL cholesterol	HDL cholesterol <40 mg/dL	
Family history of premature CHD	Clinical CHD or sudden death documented in 1st-degree male relative before age 55 or in 1st-degree female relative before age 65	

2) Calculation of 10-year CHD risk

The person with multiple risk factors is assigned to one of three categories according to 10-year risk for hard CHD (myocardial infarction + CHD death): >20 percent, 10–20 percent, and <10 percent (see Table III.1–3). A person with 10-year risk >20 percent is elevated to the category of CHD risk equivalent.

Table III.1–3. Categories of 10-Year Risk for Persons with Multiple (2+) Risk Factors

Risk Categories
>20% (CHD risk equivalents)
10–20%
<10%

Risk assessment for determining 10-year risk is carried out according to Framingham risk scoring (Tables III.1–5 for men and III.1–6 for women). Risk factor scoring in ATP III derives from an update of the Framingham database and methodology reported by Wilson et al., 1998; the revised scoring applies specifically to hard CHD. The risk factors included in the Framingham calculation of 10-year risk are: age, total cholesterol, HDL cholesterol, systolic blood pressure, treatment for hypertension, and cigarette smoking. The first step is to calculate the number of points for each risk factor. For initial assessment, values for total cholesterol and

HDL cholesterol are required. Because of a larger database, Framingham estimates are more robust for total cholesterol than for LDL cholesterol. Note that the LDL-cholesterol level is the primary target of therapy. Total cholesterol and HDL-cholesterol values should be the average of at least two measurements obtained from lipoprotein analysis. The average of several blood pressure measurements, as recommended by JNC VI (JNC VI 1997; Joint National Committee . . . 1997), is needed for an accurate measure of baseline blood pressure. The blood pressure value used in the risk score is the average of several recent values, regardless of whether the person is on antihypertensive therapy. However, if the person is on antihypertensive treatment, an extra point is added beyond points for the blood pressure reading because treated hypertension carries residual risk. The designation "smoker" means any cigarette smoking in the past month. The total risk score sums the points for each risk factor. The 10-year risk for myocardial infarction and coronary death is estimated from total points, and the person is categorized according to absolute 10-year risk as indicated above.

The primary endpoint for 10-year risk assessment in ATP III is "hard CHD" (myocardial infarction and CHD death). However, previous Framingham risk scoring provided estimates of total CHD (stable angina, unstable angina, myocardial infarction, and CHD death). Generally, estimates for hard CHD are about two-thirds to three-fourths of those for total CHD. An exception is for women whose 10-year risk is <10 percent. Estimates of hard CHD for these women can be significantly lower than for total CHD because of the high prevalence of angina pectoris in middle-aged women without evident coronary atherosclerotic disease. Although ATP III does not recommend use of Framingham risk scores for total CHD, it has been adopted in various European countries in accord with guidelines of European cardiovascular societies. Should Framingham scores for total CHD be employed, the approximate equivalency for the three subcategories of risk for persons with multiple (2+) risk factors is listed in Table III.1–4.

Table III.1–4. Approximate Equivalency of Subcategories of Hard and Total CHD According to Framingham Risk Scoring (modified from Wilson et al., 1998)

Hard CHD*	Total CHD†
>20% (CHD Risk Equivalent)	>25% (CHD Risk Equivalent)
10–20%	15–25%
<10%	<15%

* Hard CHD endpoints: myocardial infarction + CHD death.

† Total CHD endpoints: myocardial infarction + CHD death + "coronary insufficiency" (unstable angina) + angina pectoris.

Ten-year risk for hard CHD can be estimated for men and women from Tables III.1–5 and III.1–6, respectively (note that charts for men and women have different scales, so point scores for the two sexes cannot be directly compared). Tables III.1–5 and III.1–6, which approximate the Framingham equations, are provided as a convenient way to estimate 10-year CHD risk using a "paper-and-pencil" approach. Improved methods of assessing 10-year CHD risk will undoubtedly be developed in the future.

It should be noted that the Framingham equations for 10-year CHD risk are not intended to be used to track changes in risk over time as risk factors are modified. The 10-year risk calculation is intended to be performed at the outset to help guide decisions about the intensity of therapy. Thereafter, the clinical trial results are the best guide to the change in risk that accompanies reductions in the risk factors.

In Tables III.1–5 and III.1–6, note that the points for total cholesterol and cigarette smoking decline with age. At face value, this decline is in accord with reports that relative risk for CHD for these two parameters decreases with advancing age. However, this decline is more apparent than real because of the exponential rise in risk with mounting Framingham points. Thus, in older persons who have several points due to age alone, the addition of fewer points for high total cholesterol or smoking increases absolute risk as much or more as do more points at a younger age. Thus, the data in Tables III.1–5 and III.1–6 should not be misconstrued to mean that these risk factors decline in importance with advancing age. The correctness of this conclusion is shown by the same relative benefit in risk reduction obtained with LDL-lowering therapy or smoking cessation in older persons as in younger persons.

Table III.1–5. Estimate of 10-Year Risk for Men (Framingham Point Scores)

Age	Points
20–34	-9
35–39	-4
40–44	0
45–49	3
50–54	6
55–59	8
60–64	10
65–69	11
70–74	12
75–79	13

Total Cholesterol	Points at Ages 20–39	Points at Ages 40–49	Points at Ages 50–59	Points at Ages 60–69	Points at Ages 70–79
<160	0	0	0	0	0
160–199	4	3	2	1	0
200–239	7	5	3	1	0
240–279	9	6	4	2	1
≥280	11	8	5	3	1

	Points at Ages 20–39	Points at Ages 40–49	Points at Ages 50–59	Points at Ages 60–69	Points at Ages 70–79
Nonsmoker	0	0	0	0	0
Smoker	8	5	3	1	1

HDL	Points
≥60	-1
50–59	0
40–49	1
<40	2

Systolic BP	If Untreated	If Treated
<120	0	0
120–129	0	1
130–139	1	2
140–159	1	2
≥160	2	3

Point Total	10-Year Risk	Point Total	10-Year Risk
<0	<1%	11	8%
0	1%	12	10%
1	1%	13	12%
2	1%	14	16%
3	1%	15	20%
4	1%	16	25%
5	2%	≥17	≥30%
6	2%		
7	3%		
8	4%		
9	5%		
10	6%		

Table III.1–6. 10-Year Risk Estimates for Women (Framingham Point Scores)

Age	Points
20–34	-7
35–39	-3
40–44	0
45–49	3
50–54	6
55–59	8
60–64	10
65–69	12
70–74	14
75–79	16

Total Cholesterol	Points at Ages 20–39	Points at Ages 40–49	Points at Ages 50–59	Points at Ages 60–69	Points at Ages 70–79
<160	0	0	0	0	0
160–199	4	3	2	1	1
200–239	8	6	4	2	1
240–279	11	8	5	3	2
≥280	13	10	7	4	2

	Points at Ages 20–39	Points at Ages 40–49	Points at Ages 50–59	Points at Ages 60–69	Points at Ages 70–79
Nonsmoker	0	0	0	0	0
Smoker	9	7	4	2	1

HDL	Points
≥60	-1
50–59	0
40–49	1
<40	2

Systolic BP	If Untreated	If Treated
<120	0	0
120–129	1	3
130–139	2	4
140–159	3	5
≥160	4	6

Point Total	10-Year Risk	Point Total	10-Year Risk
<9	<1%	20	11%
9	1%	21	14%
10	1%	22	17%
11	1%	23	22%
12	1%	24	27%
13	2%	≥25	≥30%
14	2%		
15	3%		
16	4%		
17	5%		
18	6%		
19	8%		

2. Determination and classification of LDL cholesterol

a. Who should be tested for cholesterol and lipoproteins?

A fasting lipoprotein profile including major blood lipid fractions, i.e., total cholesterol, LDL cholesterol, HDL cholesterol, and triglyceride, should be obtained at least once every 5 years in adults age 20 and over. The rationale for starting cholesterol testing in young adults is described in Sections II.7.j and VIII.4. Since risk categories change slowly over time, the panel judged that lipoprotein measurements once every 5 years are adequate in otherwise low-risk persons. More frequent measurements are required for persons with multiple risk factors or, in those with 0–1 risk factor, if the LDL level is only slightly below the goal level, as will be described subsequently (see Table IV.2–5). If the testing opportunity is nonfasting, only the values for total cholesterol and HDL will be usable. In otherwise low-risk persons (0–1 risk factor), further testing is not required if the HDL-cholesterol level is ≥40 mg/dL and total cholesterol is <200 mg/dL. However, for persons with multiple (2+) risk factors, lipoprotein measurement is recommended as a guide to clinical management.

b. Procedures of measurement

A lipoprotein profile involving measurement of triglycerides and the indirect calculation of LDL cholesterol (the common method) requires a 9- to 12-hour fast. Individuals should be seated for at least five minutes prior to phlebotomy to avoid hemoconcentration. Blood should be collected in tubes without anticoagulant for serum or with EDTA for plasma. Plasma produces values approximately 3 percent lower than serum.

The measurement of any lipid is preferably performed with the person in a baseline stable condition, that is, in the absence of acute illnesses including stroke, trauma, surgery, acute infection, weight loss, pregnancy, or recent change in usual diet. These conditions often result in values that are not representative of the person's usual level.

In persons admitted to the hospital for acute coronary syndromes or coronary procedures, lipid measurements should be taken on admission or within 24 hours. These values can guide the physician on initiation of LDL-lowering therapy at discharge. LDL cholesterol levels begin to decline in the first few hours after a coronary event and are significantly decreased by 24–48 hours and may remain low for many weeks. Thus, the initial LDL cholesterol level obtained in the hospital may be substantially lower than is usual for the patient. Nevertheless, values obtained during the acute phase provide guidance for initiating LDL-lowering therapy.

LDL cholesterol is routinely estimated from measurements of total cholesterol, total triglycerides, and HDL cholesterol in the fasting state. If the triglyceride level is below 400 mg/dL, this value can be divided by five to estimate the VLDL-cholesterol level. Since total cholesterol is the sum of LDL cholesterol, HDL cholesterol, and VLDL cholesterol, LDL cholesterol can be calculated as follows (Friedewald et al., 1972):

$$\text{LDL cholesterol} = \text{total cholesterol} - \text{HDL cholesterol} - \text{triglycerides}/5$$
(where all measures are in mg/dL)

For persons with triglycerides over 400 mg/dL, estimation of LDL cholesterol by this method is not accurate. A more complex ultracentrifugation method in a specialized laboratory is required for accuracy. In addition, individuals with significantly elevated triglycerides need further evaluation.

The practical difficulties of obtaining fasting blood samples have resulted in a search for methods that directly measure LDL cholesterol in the nonfasting state. In recent years, several methods have been developed and standardized. Such methods will grow in use but still require careful quality control and monitoring. These methods do not require separation of LDL cholesterol and can be performed rapidly on automated machines. For initial testing, fasting triglycerides provide additional important information.

Most measurements are performed on venous samples from a phlebotomy. However, finger-stick methods are also widely available for total cholesterol, triglyceride, and HDL-cholesterol measurements. Careful attention must be paid to sample collection to minimize tissue fluid dilution. Sample handling is critical in obtaining accurate values from finger-stick samples. They

can produce accurate results when standardized by the same methods described for other laboratories.

The choice of laboratories is important to ensure accuracy and reliability in lipid measurements. Clinicians should seek a laboratory that participates in a recognized standardization program, preferably one standardized by the National Network Laboratories of the Centers for Disease Control and Prevention. More detailed information is provided in "Recommendations for Improving Cholesterol Measurement" from the Laboratory Standardization Panel of the NCEP (National Cholesterol Education Program. Recommendations . . . Measurement 1993) and in "Recommendations on Lipoprotein Measurement" from the NCEP Working Group on Lipoprotein Measurement (National Cholesterol Education Program 1995).

c. Classification of lipid and lipoprotein levels

In ATP II, initial classification for primary prevention was based on measurement of total cholesterol and HDL cholesterol. Because of increased availability of lipoprotein testing and to achieve more efficient evaluation, ATP III recommends measurement of LDL cholesterol for initial classification. This measurement requires a fasting lipoprotein analysis that includes total cholesterol, HDL cholesterol, triglycerides, and an estimate of LDL cholesterol. ATP III classifications of these four lipid and lipoprotein parameters were shown in Tables II.2–4, II.3–2, II.3–1, and II.2–4, respectively. Persons with very high LDL-cholesterol concentrations can have one of several familial forms of hypercholesterolemia (see Section VII).

d. Secondary dyslipidemias (see Section VII)

Any person who presents with elevated LDL cholesterol or other form of hyperlipidemia must undergo evaluation to rule out secondary dyslipidemia. The major causes of secondary dyslipidemia are shown in Table III.2–1. They include diabetes, hypothyroidism, chronic renal failure, nephrotic syndrome, chronic liver disease, and certain drugs that raise LDL cholesterol or triglyceride levels or lower HDL-cholesterol levels—particularly progestins, anabolic steroids, corticosteroids, and certain antihypertensive agents—and protease inhibitors (for persons with AIDS). The family, drug, and diet history may reveal clues to secondary causes of dyslipidemia. Patient history and physical examination can provide clues to diabetes, hypothyroidism, nephrotic syndrome, or liver disease. If a secondary dyslipidemia is suspected, urinalysis (for proteinuria), serum thyroid stimulating hormone (TSH) (for LDL cholesterol $\geq$160 mg/dL to rule out a masked form of hypothyroidism), and alkaline phosphatase (to detect obstructive biliary disease) should be measured. Glycosylated hemoglobin is a standard method for assessing the status of glucose control.

Table III.2–1. Major Causes of Secondary Dyslipidemia

• Diabetes
• Hypothyroidism
• Nephrotic syndrome
• Obstructive liver disease
• Chronic renal failure
• Drugs (that may raise LDL cholesterol or cause other dyslipidemias) – Progestins – Anabolic steroids – Corticosteroids – Protease inhibitors for treatment of HIV infections

3. Atherogenic dyslipidemia and the metabolic syndrome

a. Atherogenic dyslipidemia and classification of serum triglycerides

Atherogenic dyslipidemia is defined by elevation of serum triglycerides, presence of small LDL particles, and low HDL-cholesterol levels. For clinical purposes, elevated triglyceride (≥150 mg/dL) plus low HDL cholesterol (<40 mg/dL) defines atherogenic dyslipidemia. As previously discussed (Section II.6), these levels frequently denote the presence of the metabolic syndrome. Serum triglycerides are measured in the fasting state as part of lipoprotein analysis. The ATP III classification of fasting serum triglycerides was given in Table II.3–1. The various categories of elevated triglycerides are described in more detail in Section VII. Triglyceride levels ≥200 mg/dL indicate the need to identify non-HDL cholesterol as a secondary target of lipid-lowering therapy (see Section VII).

b. Diagnosis of the metabolic syndrome

As stated in Section II.6, the metabolic syndrome is identified in ATP III by the presence of three or more marginal or categorical risk factors (see Table II.6–1). Other components of the metabolic syndrome (insulin resistance and prothrombotic state) cannot be identified by routine clinical evaluation. However, in the presence of abdominal obesity, they can be assumed to be present to some degree.

4. Role of emerging risk factors in risk assessment

The relationship of emerging risk factors to CHD risk is considered in detail in Section II.5. Some of these factors are potential adjuncts to risk assessment, but they should not take priority over the major risk factors. Risk evaluation should first be carried out as described for the major risk factors. Measurement of emerging risk factors is optional. Emerging risk factors that can be

measured include elevations of Lp(a), remnant lipoproteins, small LDL, fibrinogen, homocysteine, high-sensitivity C-reactive protein, impaired fasting plasma glucose (110–125 mg/dL), and measures of subclinical atherosclerosis (myocardial ischemia by exercise testing, carotid inimal-medial thickness, and/or coronary calcium). Among these factors, measures of subclinical atherosclerosis appear to have the most potential usefulness for risk assessment in middle-aged or older persons in whom standard risk factors decline in predictive power for individuals. If measurements are made and if abnormalities are detected, physician judgment is needed whether to modify the risk assessment. Examples of where emerging risk factors might be integrated into ATP III risk assessment are the following: (a) to elevate persons with multiple risk factors and 10-year risk ≤20 percent to the category of CHD risk equivalent, and (b) to guide a decision about use of LDL-lowering drugs—after lifestyle changes—in persons with 0–1 risk factor who have an LDL cholesterol in the range of 160–189 mg/dL (see Section IV.2.c).

ATP III does not recommend routine measurement of any of the emerging risk factors for the purpose of risk assessment. They should be used for this purpose only in selected persons and then only on the basis of considered clinical judgment. Several of these tests are not readily available, not well standardized, and are relatively expensive. Therefore, if these tests are used to adjust risk estimates, the physician should be fully cognizant of their limitations; above all, they should not be given undue weight relative to the major risk factors.

IV. General Approach to Treatment—Goals and Thresholds

The basic principle that guides cholesterol-lowering intervention is that the intensity of treatment is directly related to the degree of risk for CHD events. Both short-term (10-year) risk and long-term risk must be considered for treatment decisions. Persons with existing CHD (or a CHD risk equivalent) are at the highest risk; for this reason, they have the lowest goal level for LDL cholesterol and receive the most intensive treatment. For persons without CHD, classification and treatment goals are based on the category of risk, of which there are two—multiple (2+) risk factors other than LDL, and 0–1 risk factor. Persons with 2+ risk factors have an LDL goal that is not quite as low as that for persons with CHD (or CHD risk equivalents). ATP III differs from ATP II in that it distinguishes three subcategories of risk among persons with multiple (2+) risk factors: 10-year risk for hard CHD >20 percent, 10–20 percent, and <10 percent. Among the group with multiple risk factors, those at highest risk receive the most intensive LDL-lowering therapy, and those with the lowest risk receive the least intensive therapy. For persons with 0–1 risk factor, LDL goal levels are not as low as for persons with multiple risk factors, and intensive LDL-lowering therapy is not required unless LDL cholesterol levels are very high.

1. Therapeutic goals for LDL cholesterol

ATP III recommends that LDL cholesterol be the primary target of therapy. The LDL cholesterol goals for each risk category are shown in Table IV.1–1.

Table IV.1–1. LDL Cholesterol Goals for Three Risk Levels

Risk Level	LDL-C Goal
CHD and CHD Risk Equivalent	<100 mg/dL
Multiple (2+) Risk Factors	<130 mg/dL*
0–1 Risk Factor	<160 mg/dL

* LDL-C goal for multiple-risk-factor persons with 10-year risk >20 percent = <100 mg/dL.

Persons with CHD or CHD risk equivalent have an LDL cholesterol goal of <100 mg/dL. Those with multiple risk factors have an LDL cholesterol goal of <130 mg/dL; an exception is the patient with a CHD risk equivalent (>20 percent per 10 years) who has an LDL cholesterol goal <100 mg/dL. Finally, those with 0–1 risk factor have a goal LDL cholesterol of <160 mg/dL. These goals are set to maximize reduction in both short-term and long-term risk.

For persons whose LDL cholesterol levels are above the goal for the category, the goal of therapy is achieved through the judicious use of dietary and drug therapies. Dietary therapy in clinical management is designated the Therapeutic Lifestyle Changes (TLC) Diet. This diet includes the following: (a) reduced intakes of saturated fats and cholesterol, (b) therapeutic dietary options to enhance LDL lowering (plant stanols/sterols and increased viscous fiber), (c) weight control, and (d) increased physical activity (see Section V). The drugs available for LDL-cholesterol-lowering are presented in Section VI.

ATP III recommends a two-step approach to cholesterol management. Priority goes to attaining the goal for LDL cholesterol; thereafter emphasis shifts to management of the metabolic syndrome and other lipid risk factors. Figure IV.1–1 shows the physician's responsibility at the first visit. Once the lipoprotein analysis is evaluated, risk factor counting and, if necessary, 10-year risk assessment are carried out to determine risk status. The patient is then started on dietary therapy or discharged with instructions for appropriate life-habit modifications. If the patient has CHD or a CHD risk equivalent, LDL-lowering drug therapy can be started simultaneously with dietary therapy if the LDL level warrants.

After an appropriate trial of dietary therapy to reduce LDL cholesterol (~ 3 months), two additional therapeutic decisions may be required. First, if the LDL cholesterol goal has not been achieved, consideration may be given to initiating drug therapy. Second, if the metabolic syndrome is present, additional lifestyle changes (i.e., weight reduction and increased physical activity) will be needed. Later, if lifestyle therapies do not alleviate the metabolic syndrome, drug therapy for treatment of the metabolic risk factors may be required.

2. Management of LDL Cholesterol

The following summarizes the ATP III approach to management of persons in the three categories of risk.

a. CHD and CHD risk equivalents

For persons with CHD and CHD risk equivalents, the type and intensity of LDL-lowering therapy are adjusted according to baseline LDL cholesterol level, i.e., whether ≥130 mg/dL, 100–129 mg/dL, or <100 mg/dL (Table IV.2–1 and Figure IV.2–1). Each subcategory of LDL cholesterol is discussed below.

Table IV.2–1. Therapeutic Approaches to LDL Cholesterol Lowering in Persons with CHD or CHD Risk Equivalents

Subcategory of LDL Cholesterol Level	LDL Cholesterol Goal	Level at Which to Initiate Dietary Therapy (TLC)	Level at Which to Initiate LDL-Lowering Drugs
≥130 mg/dL	<100 mg/dL	≥100 mg/dL	Start drug therapy simultaneously with dietary therapy
100–129 mg/dL	<100 mg/dL	≥100 mg/dL	Consider drug options*
<100 mg/dL	<100 mg/dL	TLC & emphasize weight control and physical activity	LDL-lowering drugs not required

* Some authorities recommend use of LDL-lowering drugs in this category if an LDL cholesterol <100 mg/dL cannot be achieved by TLC. Others prefer use of drugs that primarily modify other lipoprotein fractions, e.g., nicotinic acid and fibrate. Clinical judgment also may call for withholding drug therapy in this subcategory.

1) Baseline LDL cholesterol ≥130 mg/dL

Persons with LDL cholesterol ≥130 mg/dL generally will require an LDL-lowering drug to achieve LDL cholesterol <100 mg/dL. Therefore, a cholesterol-lowering drug should be initiated simultaneously with TLC and maximal control of other risk factors. If the LDL cholesterol falls to the range of 100–129 mg/dL on cholesterol-lowering therapy, several options are available depending on circumstances.

- LDL lowering can be intensified with dietary therapy to achieve an LDL cholesterol level <100 mg/dL.
- LDL lowering can be intensified with drug therapy to achieve an LDL cholesterol level <100 mg/dL.
- If the on-treatment LDL cholesterol level is near the goal of therapy, the physician can maintain the current LDL-lowering therapy unchanged.
- If the metabolic syndrome is present, dietary therapy is intensified by increased efforts to reduce excess weight and increase physical activity.
- If the patient has elevated triglycerides or low HDL, a different lipid-lowering drug can be considered (e.g., nicotinic acid or fibric acid) for combination therapy with an LDL-lowering drug (see Section VI).

2) Baseline LDL cholesterol 100–129 mg/dL

When baseline LDL cholesterol is 100–129 mg/dL, several therapeutic options likewise are available. All approaches include TLC as initial therapy. Depending on circumstances, the following options are available:

- Inclusion of therapeutic dietary options (e.g., plant stanol/sterols and increased viscous fiber) can help to achieve the LDL goal.
- If LDL cholesterol levels remain appreciably above 100 mg/dL after 3 months of maximal dietary therapy, consideration can be given to adding an LDL-lowering drug.
- If the patient has an elevated triglyceride or low HDL cholesterol level, another lipid-lowering drug can be considered (e.g., nicotinic acid or fibric acid).
- If the LDL cholesterol level falls to near the goal on dietary therapy alone, the physician can choose to forgo use of a lipid-lowering drug for the present.

Because other risk factors may have contributed importantly to development of CHD in persons with low LDL levels, maximal control of nonlipid risk factors is necessary.

3) Baseline LDL cholesterol <100 mg/dL

If baseline LDL cholesterol is below the goal of therapy, further LDL-lowering therapy is not currently recommended. Emphasis should be placed on controlling other risk factors and the metabolic syndrome. The TLC diet should be recommended to the person to help maintain a low LDL.

b. Multiple (2+) risk factors

ATP III differs from ATP II in that it distinguishes three subcategories of risk among persons with multiple risk factors, depending on 10-year risk: >20 percent, 10–20 percent, and <10 percent. Within this category of multiple (2+) risk factors, intensity of therapy is adjusted according to 10-year risk and LDL cholesterol level. The treatment approach for each subcategory is shown below in Table IV.2–2.

Table IV.2–2. Management of LDL Cholesterol in Persons with Multiple (2+) Risk Factors

10-Year Risk	LDL Goal	LDL Level at Which to Initiate Therapeutic Lifestyle Changes (TLC)	LDL Level at Which to Consider Drug Therapy (After TLC)
>20%	<100 mg/dL	≥100 mg/dL	See CHD and CHD risk equivalent
10–20%	<130 mg/dL	≥130 mg/dL	≥130 mg/dL
<10%	<130 mg/dL	≥130 mg/dL	≥160 mg/dL

The following reviews the approach to each subcategory in more detail.

1) Multiple risk factors, 10-year risk >20 percent

Persons with multiple risk factors and 10-year risk >20 percent have a CHD risk equivalent and are treated as described in the previous section (See Figure IV.2–1).

2) Multiple risk factors, 10-year risk 10–20 percent

The goal for LDL cholesterol in this risk category is <130 mg/dL. The therapeutic aim is to reduce short-term risk as well as long-term risk for CHD. If baseline LDL cholesterol is ≥130 mg/dL, persons are started on TLC for a 3-month trial of dietary therapy, possibly augmented by options for further LDL lowering (plant stanols/sterols and increased viscous fiber). After 6 weeks and again after three months of dietary therapy, lipoprotein analysis is repeated. If LDL remains ≥130 mg/dL after three months, consideration can be given to starting an LDL-lowering drug to achieve the LDL goal <130 mg/dL. Should the LDL be less than 130 mg/dL on dietary therapy alone, it can be continued without adding drug treatment. If the metabolic syndrome is present, more attention should be given to weight control and increased physical activity. See Figure IV.2–2 for the treatment algorithm for this subcategory.

3) Multiple risk factors, 10-year risk <10 percent

The goal for LDL cholesterol in this risk category likewise is <130 mg/dL. The therapeutic aim, however, is primarily to reduce longer-term risk. If baseline LDL cholesterol is ≥130 mg/dL, persons are started on dietary therapy for reducing LDL cholesterol. Options for enhancing LDL lowering can be employed if needed to achieve the goal of therapy. After three months of dietary therapy, lipoprotein analysis is repeated. If LDL is <160 mg/dL on dietary therapy alone, the dietary therapy should be continued. LDL-lowering drugs generally are not recommended because the patient is not at high short-term risk. On the other hand, if LDL cholesterol is

≥160 mg/dL, drug therapy can be considered to achieve an LDL cholesterol <130 mg/dL. See Figure IV.2–3 for the treatment algorithm for this subcategory.

c. Zero to one risk factor

Most persons with 0–1 risk factor have a 10-year risk <10 percent. Guidelines for this category are given in Table IV.2–3.

Table IV.2–3. Management of LDL Cholesterol in Persons with Zero to One (0–1) Risk Factor

Risk Category	LDL Goal	LDL Level at Which to Initiate TLC	LDL Level at Which to Consider Drug Therapy (After TLC)
0–1 Risk Factor*	<160 mg/dL	≥160 mg/dL	≥190 mg/dL†

* Most persons with 0–1 risk factor have a 10-year risk for CHD <10 percent

† Drug therapy optional for LDL-C 160–189 mg/dL (after dietary therapy)

The goal for LDL cholesterol in this risk category is <160 mg/dL. The primary aim of therapy is to reduce long-term risk. When baseline LDL cholesterol is ≥160 mg/dL, persons are started on dietary therapy for three months. After 6 weeks, the LDL response is evaluated and dietary enhancers of LDL lowering (plant stanols/sterols and increased viscous fiber) may be added if necessary to reach the LDL goal. After 3 months, lipoprotein analysis is repeated. If LDL cholesterol is <160 mg/dL, dietary therapy is continued. For LDL cholesterol 160–189 mg/dL, drug therapy is optional depending on clinical judgment. Factors that favor use of drugs in this category include:

- A severe single risk factor (heavy cigarette smoking, poorly controlled hypertension, strong family history of premature CHD, or very low HDL cholesterol).
- Multiple life-habit risk factors and emerging risk factors (if measured).
- 10-year risk approaching 10 percent (if measured).

If LDL cholesterol is ≥190 mg/dL despite dietary therapy in persons with 0–1 risk factor, drug therapy can be considered to achieve the goal of therapy in all adults. For persons with severe elevations of LDL cholesterol (e.g., ≥220 mg/dL), drug therapy can be started together with dietary therapy. Most such patients will have genetic forms of hypercholesterolemia that cannot be adequately treated with dietary therapy alone.

d. Management of LDL cholesterol when risk assessment begins with Framingham scoring (Table IV.2–4)

If clinicians choose to begin risk assessment with Framingham risk scoring, the treatment algorithm is similar to that beginning with risk factor counting. The only difference occurs for persons whose 10-year risk is 10–20 percent and who have 0–1 risk factor; if one begins with

risk factor counting, such persons would not have their 10-year risk calculated. This difference occurs in only 2.6 percent of the U.S. population that has 0–1 risk factor.

Table IV.2–4. Management of LDL Cholesterol in Persons Beginning with 10-year Risk Assessment

10-Year Risk	LDL Goal	LDL Level at Which to Initiate TLC	LDL Level at Which to Consider Drug Therapy (After TLC)
>20%	<100 mg/dL	≥100 mg/dL	See CHD and CHD risk equivalent
10–20%	<130 mg/dL	≥130 mg/dL	≥130 mg/dL
<10%:			
Multiple (2+) risk factors	<130 mg/dL	≥130 mg/dL	≥160 mg/dL
0–1 risk factor	<160 mg/dL	≥160 mg/dL	≥190 mg/dL*

* Drug therapy optional for LDL-C 160–189 mg/dL (after dietary therapy)

e. Recommendations for persons whose LDL cholesterol levels are below goal

For persons whose LDL cholesterol levels are already below goal levels upon encounter, instructions for appropriate changes in life habits, periodic follow-up, and control of other risk factors are required (upper portions of Figures IV.1–1, IV.2–2, IV.2–3, and IV.2–4). For all persons without CHD or CHD risk equivalents whose LDL is below goal, the diet for the general public and a physical activity regimen should be recommended. For those with CHD or CHD risk equivalent, the therapeutic diet (TLC diet, see Section V) should be recommended even if the LDL is below goal. Follow-up lipoprotein analysis should be carried out according to Table IV.2–5.

Table IV.2–5. Schedule for Follow-Up Lipoprotein Analysis for Persons Whose LDL Cholesterol Levels are Below Goal Levels

Risk Level	LDL Goal (mg/dL)	LDL Level Observed (mg/dL)	Repeat Lipoprotein Analysis
CHD or CHD risk equivalents	<100	<100	<1 year
2+ risk factors	<130	<130	≤2 years
0–1 risk factor	<160	130–159	≤2 years
0–1 risk factor	<160	<130	≤5 years

f. LDL-lowering therapy in older persons

For primary prevention in persons ≥65 years of age, clinical judgment plays an increasingly important role in decisions about LDL-lowering therapy. Framingham risk scores are less robust for predicting risk in older individuals, and measurements of subclinical atherosclerosis, when available, can assume increasing importance. Rather than routinely applying the algorithms described for persons with multiple risk factors, physician judgment may rely more heavily on the estimated NNT to achieve a reduction in CHD events for the different risk categories (Table II.7–2). Other factors including concomitant chronic diseases, social circumstances, chronological and functional age, and financial considerations must be taken into account when making decisions about therapy, especially about use of LDL-lowering drugs, in older persons.

3. Management of atherogenic dyslipidemia and the metabolic syndrome

After an adequate trial of dietary therapy for LDL lowering, attention should turn to atherogenic dyslipidemia and the metabolic syndrome. Treatment of these conditions usually begins after an initial 3-month period of dietary therapy to lower LDL cholesterol. Therapy for atherogenic dyslipidemia and metabolic syndrome thus begins after the LDL goal has been achieved with TLC alone or simultaneously with initiation of more intensive LDL-lowering therapy with drugs.

a. Atherogenic dyslipidemia

For atherogenic dyslipidemia, treatment strategy focuses on triglycerides. If triglycerides are ≥150 mg/dL and HDL cholesterol is <40 mg/dL, a diagnosis of atherogenic dyslipidemia is made. The patient likely has the metabolic syndrome (see below); if triglycerides are <200 mg/dL, and specific drug therapy to reduce triglyceride-rich lipoproteins (TGRLP) is not indicated. However, if the patient has CHD or CHD risk equivalents, consideration can be given to using a drug to raise HDL cholesterol (fibrate or nicotinic acid), as outlined above under LDL-lowering therapy. On the other hand, if triglycerides are 200–499 mg/dL, non-HDL cholesterol becomes a secondary target of therapy. Goals for non-HDL cholesterol are 30 mg/dL higher than those for LDL cholesterol. First the LDL cholesterol goal is attained, and if non-HDL remains elevated, additional therapy may be required to achieve the non-HDL goal. Alternative approaches for treatment of elevated non-HDL cholesterol that persists after the LDL goal has been achieved are (a) higher doses of statins, or (b) moderate doses of statins + triglyceride-lowering drug (nicotinic acid or fibrate) (see Sections VI and VII). If triglycerides are very high (≥500 mg/dL), attention turns first to prevention of acute pancreatitis, which is more likely to occur when triglycerides are >1000 mg/dL. Triglyceride-lowering drugs (fibrate or nicotinic acid) become first line therapy; although statins can be used to lower LDL cholesterol to reach the LDL goal, in these patients it is often difficult (and unnecessary) to achieve a non-HDL cholesterol goal of only 30 mg/dL higher than for LDL cholesterol.

b. Metabolic syndrome

Beyond treatment of elevated triglycerides, with drugs if necessary, first-line therapy for the metabolic syndrome is change in life habits, especially reducing weight and increasing physical

activity. The approach to treatment of the metabolic syndrome with life-habit modification is presented in Section V.

Figure IV.1–1. Physician responsibilities for Visit 1.

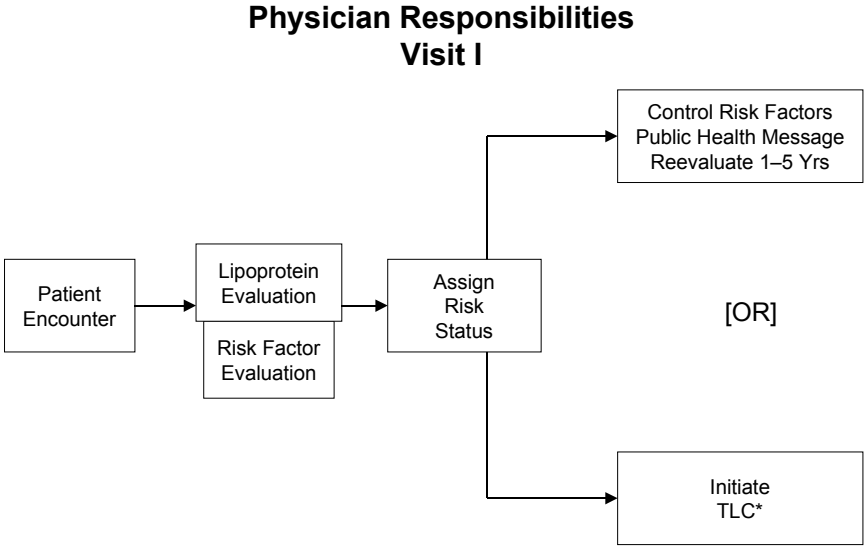

* If CHD or CHD risk equivalent are present, drug therapy can be started simultaneously with TLC when LDL-C is ≥130 mg/dL

Figure IV.2–1. Therapeutic approaches to persons with CHD or CHD risk equivalent. The LDL cholesterol goal is <100 mg/dL.

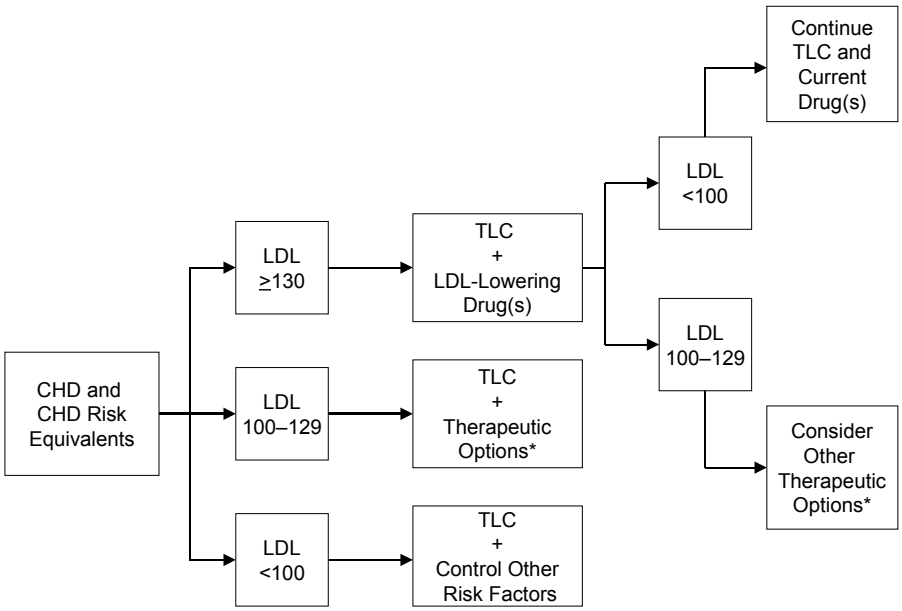

* Therapeutic options include intensifying LDL-lowering dietary or drug therapies, emphasizing weight reduction and increased physical activity, adding drugs to lower triglycerides or raise HDL cholesterol (nicotinic acid or fibrates), and intensifying control of other risk factors.

Figure IV.2–2. Therapeutic approaches to persons with multiple risk factors, 10-year risk 10–20 percent. The LDL cholesterol goal is <130 mg/dL. Drugs can be considered if necessary to attain the LDL cholesterol goal if the LDL cholesterol level is ≥130 mg/dL after a trial of TLC.

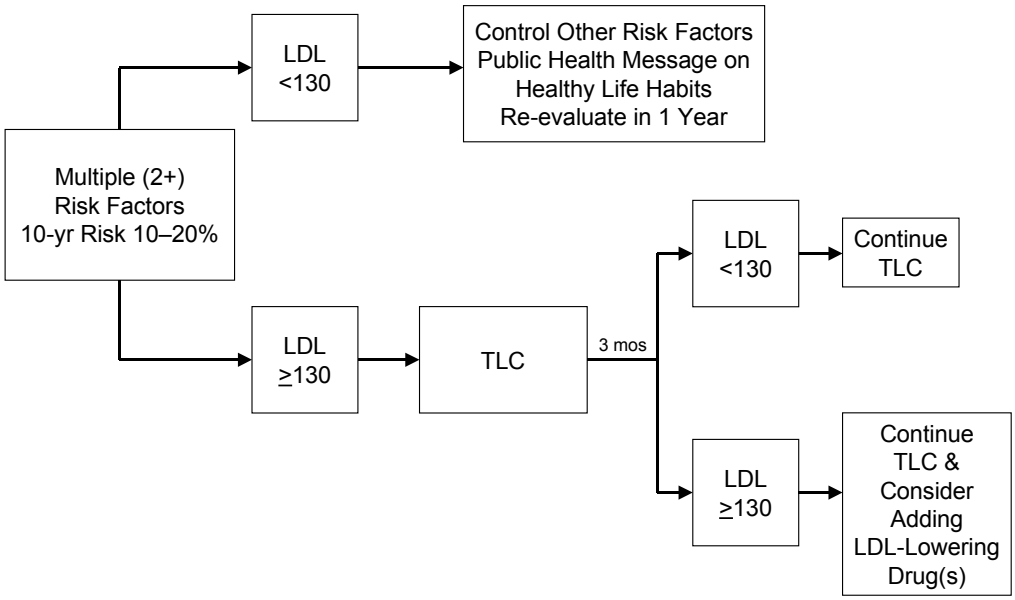

Figure IV.2–3. Therapeutic approaches to the patient with multiple (2+) risk factors, 10-year risk <10 percent. The LDL cholesterol goal is <130 mg/dL. Drug therapy can be considered if LDL cholesterol is ≥160 mg/dL after a trial of TLC.

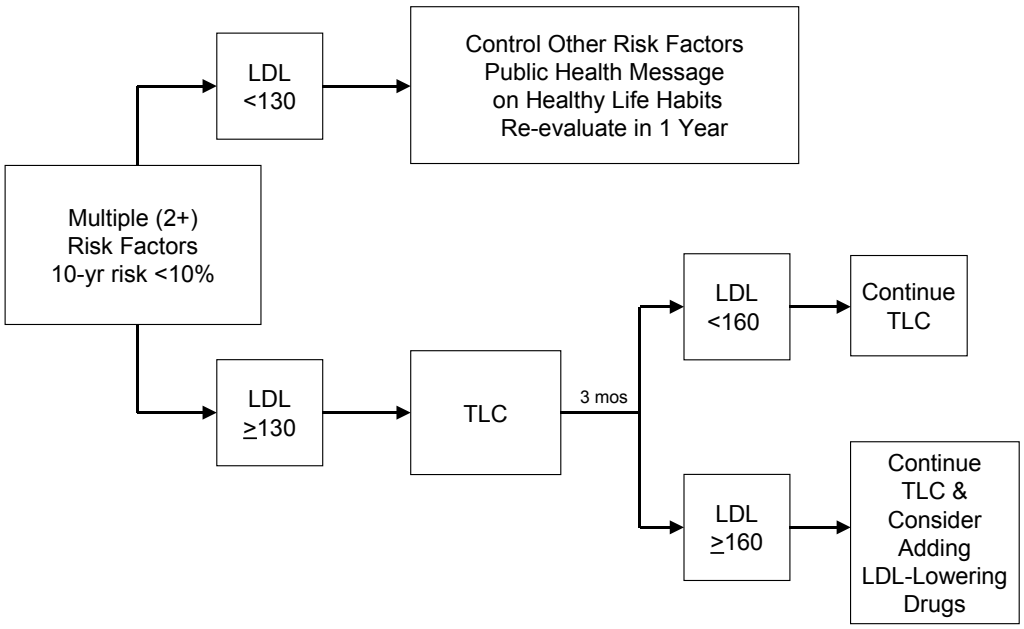

Figure IV.2–4. Therapeutic approaches to persons with 0–1 risk factor. The LDL cholesterol goal is <160 mg/dL. Drug therapy can be considered if the LDL cholesterol level is ≥190 mg/dL after a trial of TLC. If LDL cholesterol is 160–189 mg/dL, drug therapy is optional depending on clinical judgment.

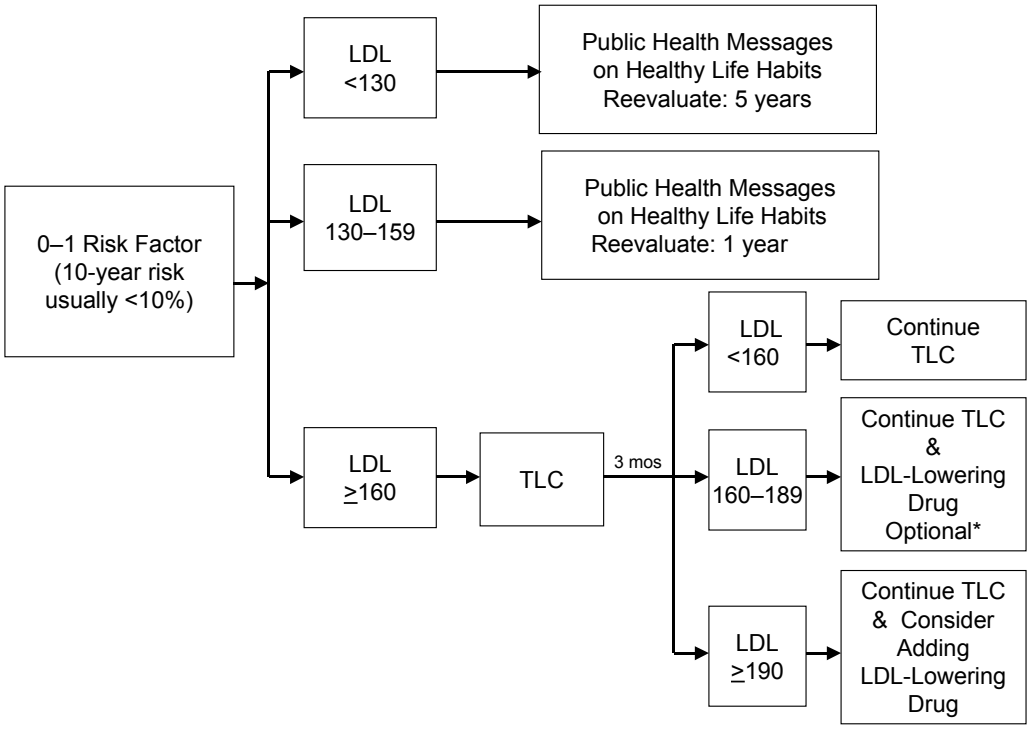

* Factors favoring drug use are a severe single risk factor, a family history of premature CHD, and/or underlying or emerging risk factors in addition to a single major risk factor

V. Adopting Healthful Lifestyle Habits to Lower LDL Cholesterol and Reduce CHD Risk

1. Population approach: promoting a base of healthy life habits

NCEP advocates a two-pronged approach for reducing CHD risk: the population approach and the clinical strategy. The two are closely linked. The population approach, which is outlined in the 1990 report of the Population Panel (National Cholesterol Education Program 1990; Report of the Expert Panel on Population Strategies . . . 1991), is designed to lower risk in the whole population through adoption of healthy life habits including a healthy diet, weight control, and increased physical activity. The clinical strategy is described in the ATP reports. This section summarizes the population approach and connects it to the clinical strategy. The clinical management team must recognize that they are an integral part of the population approach and contribute to it by providing education and guidance to the patient with high serum cholesterol and the patient's family.

The health community has provided the American public with consistent messages on cardiovascular risk reduction for the past four decades. These messages have encouraged avoidance or cessation of cigarette smoking, reduction of intakes of saturated fats and cholesterol, achieving and maintaining a healthy body weight, regular physical activity, and routine medical check-ups for blood pressure and cholesterol. Table V.1–1 (derived from the Healthy People 2010 publication) (U.S. Department of Health and Human Services 2000) reports the current status of the U.S. population on various healthy lifestyle habits and compares it with the goals for 2010.

Table V.1–1. Status Report on Healthy Lifestyle Habits: Healthy People 2010

Lifestyle Habit	Status in the 1990s	Goal for 2010
Healthy weight (BMI <25 kg/m^2)	42%	60%
Saturated fat intake <10% calories	36%	75%
Vegetable intake of at least 3 servings/day with at least 1/3 dark green or orange	3%	50%
Fruit intake of at least 2 servings/day	28%	75%
Grain intake of at least 6 servings/day with at least 1/3 whole grain	7%	50%
Smoking cessation by adult smokers	41%	75%
Regular physical activity of moderate intensity	15%	30%

Although progress has been made, it is clear that much more is needed to bring about the changes required to achieve the goals for 2010. The physician has an important role to play in this effort to help attain these goals.

The NHLBI, American Heart Association, and other organizations have mounted a major effort to reduce risk factors for CHD in the United States. Not only is there continuing research on improved methods for risk reduction, but national educational programs have also been put into effect. Table V.1–2 lists some of the Web sites of the programs sponsored by the U.S. Government.

Table V.1–2. Government-Sponsored Web Sites for Public Information: An Effective Way to Implement the Public Health Approach

Diet	www.nhlbi.nih.gov/chd www.nhlbi.nih.gov—then click on Aim for a Healthy Weight www.nhlbi.nih.gov/hbp www.nutrition.gov
Physical activity	www.surgeongeneral.gov/ophs/pcpfs.htm
Body weight	www.nhlbi.nih.gov—then click on Aim for a Healthy Weight
Cholesterol	www.nhlbi.nih.gov/chd
Blood pressure	www.nhlbi.nih.gov/hbp
Smoking cessation	www.cdc.gov/tobacco/sgr_tobacco_use.htm

Physicians and other health professionals have the opportunity to implement the public health and clinical approaches to risk reduction through interaction with patients and their families. Even in persons who are not candidates for clinical management of high serum cholesterol, control of other risk factors and preventive efforts convey the broader public health message to the patient. The physician's advice is valued and considered more credible than mass media or non-targeted educational campaigns. The physician can affect the public health arena in many ways. Table V.1–3 compares the role of the physician and other health professionals in the implementation of the public health approach with their role in the clinical management of risk factors through lifestyle changes.

Table V.1–3. The Role of the Physician and Other Health Care Professionals in Implementing the Population and Clinical Approaches to Lifestyle Modification

	Population Approach	Clinical Approach
Principles	Promote change in lifestyle habits by serving as a role model to patients Provide general advice and access to credible sources of information regarding healthy lifestyle habits	Promote targeted changes in individual lifestyle to produce significant reductions in an individual patient's risk Initiate outcome measurements that will be tracked during scheduled follow-up visits Physicians, dietitians, and other relevant health professionals should go beyond monitoring adherence to actively helping individuals overcome barriers and promote new behaviors
Diet	Briefly assess dietary intake of saturated fat and cholesterol Promote U.S. Dietary Guidelines (population diet) using pamphlets/handouts and Food Guide Pyramid – emphasize food portions Provide shopping and food preparation pamphlets/handouts highlighting low saturated fat foods including reduced fat dairy products, leaner meats, lower fat ground meat, and reduced fat baked goods Make full use of office personnel to promote public health message	Promote ATP III TLC diet using: • Individualized diet counseling that provides acceptable substitutions for favorite foods contributing to a patient's elevated LDL level – counseling often best performed by a registered dietitian • Reinforcement of dietary principles during follow-up visits at which LDL response to diet is assessed • Consideration of readiness to change and level of motivation
Physical activity	Promote regular physical activity by taking a physical activity history Provide pamphlets/advice regarding general principles of physical activity Recommend 30 minutes/day of regular moderate intensity activity	Follow Surgeon General recommendations for physical activity (U.S. Department of Health and Human Services. Physical activity and health. . . 1996b). Promote regular physical activity for individuals using: • Specific recommendations to increase physical activity based on a patient's cardiac status, age, and other factors • Specific advice regarding how physical activity could be integrated into the patient's lifestyle • Follow-up visits to monitor physical activity level, and follow-up counseling regarding barriers to daily physical activity

Table V.1–3. (continued)

	Population Approach	Clinical Approach
Body Weight	Ensure that weight, height, and waist circumference are measured at every visit Promote prevention of weight gain: • Provide access to tables identifying height/weight categories for BMI in waiting room or exam room • Provide literature relating BMI to health outcomes • Provide literature explaining use of Nutrition Fact labeling to identify calorie content and recommended portion sizes of foods	Follow Obesity Education Initiative (OEI) guidelines for weight management (National Institutes of Health 1998a,b) Promote prevention of weight gain: • Calculate BMI for every patient at every visit • Anticipate high-risk times for weight gain (perimenopausal years, times of significant life stress) and counsel patient on ways to prevent weight gain • Follow-up visits to discuss success of weight gain prevention strategies Discuss 10% weight loss goals for persons who are overweight: • Discuss lifestyle patterns that promote weight loss • Portion control • Daily physical activity • Follow-up visits to examine weight/BMI and discuss barriers to adherence
Cholesterol	Ensure that all adults age 20 and over have their blood cholesterol measured and their results explained in keeping with ATP III guidelines Ensure children and first degree relatives of adults in whom a genetic lipoprotein disorder is suspected have cholesterol screening performed	Follow ATP III guidelines for detection, evaluation, and treatment of persons with lipid disorders
Blood Pressure	Ensure that all adults have their blood pressure measured and their results explained in keeping with JNC VI guidelines	Follow JNC VI guidelines for the detection, evaluation, and treatment of persons with high blood pressure (JNC VI 1997; Joint National Committee . . . 1997)

Table V.1–3. (continued)

	Population Approach	Clinical Approach
Smoking cessation	Ensure that all persons are aware of the health hazards of cigarette smoking by using posters/handouts in the waiting room Query all persons regarding their smoking habits on every visit	Follow U.S. Department of Health and Human Services Clinical Practice Guideline: Treating Tobacco Use and Dependence (Public Health Service 2000) Promote smoking cessation: • Query regarding smoking habits • Provide targeted advice according to patient's knowledge base, e.g., dangers of smoking, benefits of quitting, and tips to quit • Schedule follow-up visits to discuss patient's progress in addressing smoking cessation

2. General approach to therapeutic lifestyle changes (TLC)

ATP III recommends a multifactorial lifestyle approach to reducing risk for CHD. This approach is designated *therapeutic lifestyle changes* (TLC) and includes the following components (see Table V.2–1):

- Reduced intakes of saturated fats and cholesterol
- Therapeutic dietary options for enhancing LDL lowering (plant stanols/sterols and increased viscous [soluble] fiber)
- Weight reduction
- Increased regular physical activity

Reduced intakes of saturated fats and cholesterol and other therapeutic dietary options for LDL-lowering (plant stanols/sterols and increased viscous fiber) are introduced first for the purpose of achieving the LDL cholesterol goal. After maximum reduction of LDL cholesterol is achieved with dietary therapy, emphasis shifts to management of the metabolic syndrome and its associated lipid risk factors (elevated triglycerides and low HDL cholesterol). A high proportion of patients with the metabolic syndrome are overweight/obese and sedentary; for them, weight reduction therapy and physical activity guidance is required to obtain further CHD risk reduction beyond that achieved by LDL lowering. At all stages of dietary therapy, physicians are encouraged to refer patients to registered dietitians or other qualified nutritionists for *medical nutrition therapy,* which is the term for the nutrition intervention and guidance provided by a nutrition professional.

Table V.2–1. Essential Components of Therapeutic Lifestyle Changes (TLC)

Component	Recommendation
LDL-raising nutrients	
Saturated fats*	Less than 7% of total calories
Dietary cholesterol	Less than 200 mg/day
Therapeutic options for LDL lowering	
Plant stanols/sterols	2 grams per day
Increased viscous (soluble) fiber	10–25 grams per day
Total calories (energy)	Adjust total caloric intake to maintain desirable body weight/prevent weight gain
Physical activity	Include enough moderate exercise to expend at least 200 Kcal per day

* *Trans* fatty acids are another LDL-raising fat that should be kept at a low intake

ATP III recommendations for ranges of other macronutrient intakes in the TLC Diet are given in Table V.2–2. Note that the recommendation for total fat ranges from 25 percent to 35 percent of total calories. To improve overall health, ATP III's lifestyle therapies generally contain the recommendations embodied in the Dietary Guidelines for Americans 2000 (U.S. Department of Agriculture . . . 2000).

Table V.2–2. Macronutrient Recommendations for the TLC Diet

Component	Recommendation
Polyunsaturated fat	Up to 10% of total calories
Monounsaturated fat	Up to 20% of total calories
Total fat	25–35% of total calories*
Carbohydrate†	50–60% of total calories*
Dietary fiber	20–30 grams per day
Protein	Approximately 15% of total calories

* ATP III allows an increase of total fat to 35 percent of total calories and a reduction in carbohydrate to 50 percent for persons with the metabolic syndrome. Any increase in fat intake should be in the form of either polyunsaturated or monounsaturated fat.

† Carbohydrate should derive predominantly from foods rich in complex carbohydrates including grains—especially whole grains—fruits, and vegetables.

The overall composition of the TLC Diet is consistent with the recommendations of the Dietary Guidelines for Americans 2000 (Table V.2–3). The dietary principles delineated in the Dietary Guidelines need not and should not be sacrificed for the purpose of LDL lowering. Furthermore,

adherence to Dietary Guidelines recommendations should contribute to a reduction in risk beyond LDL lowering.

Table V.2–3. Dietary Guidelines for Americans 2000 (U.S. Department of Agriculture . . . 2000)

Aim for Fitness
• Aim for a healthy weight
• Be physically active each day
Build a Healthy Base
• Let the pyramid guide your food choices
• Choose a variety of grains daily, especially whole grains
• Choose a variety of fruits and vegetables daily
• Keep foods safe to eat
Choose sensibly
• Choose a diet that is low in saturated fat and cholesterol and moderate in total fat
• Choose beverages and foods to moderate your intake of sugars
• Choose and prepare foods with less salt
• If you drink alcoholic beverages, do so in moderation

Figure V.2–1 presents one model illustrating the general approach to dietary therapy.

Figure V.2–1. A Model of Steps in Therapeutic Lifestyle Changes (TLC)

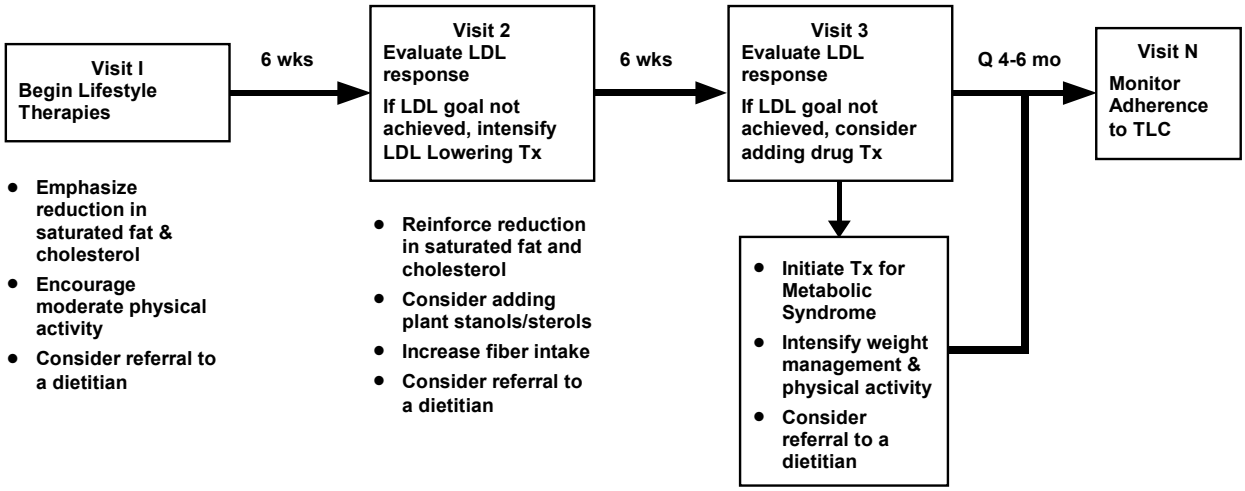

During the first three months of dietary therapy, priority is given to lowering LDL cholesterol. In the first visit, the physician should address a few key questions and obtain an overall assessment of the individual's current life habits:

- Does the patient consume excess calories in the form of LDL-raising nutrients?
- Is the patient overweight or obese? Is abdominal obesity present?
- Is the patient physically active or inactive?
- If the patient is overweight/obese and/or physically inactive, is the metabolic syndrome present? (See Table II.6–1.)

To assess intakes of LDL-raising nutrients, the ATP III panel devised a brief Dietary CAGE that may be helpful (Table V.2–4). These questions are not a substitute for a systematic dietary assessment, which is usually carried out by a nutrition professional. CAGE questions can be used to identify the common food sources of LDL-raising nutrients—saturated fat and cholesterol—in the patient's diet. Also in the first visit, advice is given to begin moderate physical activity, but serious attempts to achieve weight loss can be delayed briefly to concentrate first on reducing intakes of LDL-raising nutrients. At any and every stage of dietary therapy, effective dietary modification will be facilitated by consultation with a registered dietitian or other qualified nutritionist for *medical nutrition therapy.* (Subsequently, the term ***nutrition professional*** will refer to a registered dietitian or qualified nutritionist.)

Table V.2–4. Dietary CAGE Questions for Assessment of Intakes of Saturated Fat and Cholesterol

- C—Cheese (and other sources of dairy fats—whole milk, 2% milk, ice cream, cream, whole fat yogurt)
- A—Animal fats (hamburger, ground meat, frankfurters, bologna, salami, sausage, fried foods, fatty cuts of meat)
- G—Got it away from home (high-fat meals either purchased and brought home or eaten in restaurants)
- E—Eat (extra) high-fat commercial products: candy, pastries, pies, doughnuts, cookies

After approximately 6 weeks, the physician should evaluate the LDL cholesterol response. If the LDL cholesterol goal has been achieved, or if progress in LDL lowering has occurred, dietary therapy should be continued. If the LDL goal is not achieved, the physician has several options to enhance LDL lowering. First, dietary instructions can be reexplained and reinforced. The assistance of a nutrition professional for more formal instruction and counseling (medical nutrition therapy) is especially valuable at this time. Second, therapeutic dietary options for LDL lowering (plant stanols/sterols and increased viscous fiber) will also enhance LDL lowering. Plant stanols/sterols are currently incorporated into special margarines, which are available directly to consumers. The stanol/sterol contents are listed on the food label. They may be available in other products in the future. Viscous fiber can be increased by emphasizing certain foods: cereal grains, fruits, vegetables, and dried beans, peas, and legumes (see Table V.2–5).

Table V.2–5. Food Sources of Viscous (Soluble) Fiber

Food Source	Soluble Fiber (g)	Total Fiber (g)
Cereal Grains (½ cup cooked)		
• Barley	1	4
• Oatmeal	1	2
• Oatbran	1	3
• Seeds		
– Psyllium Seeds, Ground (1 Tbsp)	5	6
Fruit (1 medium fruit)		
• Apples	1	4
• Bananas	1	3
• Blackberries (½ cup)	1	4
• Citrus Fruit (orange, grapefruit)	2	2-3
• Nectarines	1	2
• Peaches	1	2
• Pears	2	4
• Plums	1	1.5
• Prunes (¼ cup)	1.5	3
Legumes (½ cup cooked)		
• Beans		
– Black Beans	2	5.5
– Kidney Beans	3	6
– Lima Beans	3.5	6.5
– Navy Beans	2	6
– Northern Beans	1.5	5.5
– Pinto Beans	2	7
• Lentils (yellow, green, orange)	1	8
• Peas		
– Chick Peas	1	6
– Black Eyed Peas	1	5.5
Vegetables (½ cup cooked)		
• Broccoli	1	1.5
• Brussels Sprouts	3	4.5
• Carrots	1	2.5

After another 6 weeks, the response to dietary therapy should be evaluated. If the LDL cholesterol goal is achieved, the current intensity of dietary therapy should be maintained indefinitely. If the patient is approaching the LDL goal, consideration should be given to continuing dietary therapy before adding LDL-lowering drugs. If it appears unlikely that the LDL goal will be achieved with dietary therapy alone, drug therapy should be considered (see Section IV).

Thereafter, the metabolic syndrome, if present, becomes the target of therapy (see Section II). First-line therapy for the metabolic syndrome is weight control and increased physical activity. Again, referral to a nutrition professional for medical nutrition therapy to assist in weight reduction is recommended.

Finally, long-term monitoring for adherence to TLC is required. Revisits are indicated every 4–6 months during the first year of therapy and every 6–12 months in the long term. If a person is started on drug therapy, more frequent visits are advised.

The information shown in Table V.2–6 may be helpful for the physician both for dietary and lifestyle assessment and for guidance of the patient adopting TLC recommendations. The table is compiled from current ATP III dietary recommendations, Dietary Guidelines for Americans (U.S. Department of Agriculture . . . 2000), Obesity Education Initiative (OEI) guidelines for weight reduction (National Institutes of Health 1998a,b), and the Surgeon General's report on physical activity (U.S. Department of Health and Human Services 1996b).

Table V.2–6. Guide to Therapeutic Lifestyle Changes (TLC)

Healthy Lifestyle Recommendations for a Healthy Heart

Food Items to Choose More Often	Food Items to Choose Less Often	Recommendations for Weight Reduction	Recommendations for Increased Physical Activity
Breads and Cereals ≥6 servings per day, adjusted to caloric needs Breads, cereals, especially whole grain; pasta; rice; potatoes; dry beans and peas; low fat crackers and cookies **Vegetables** 3–5 servings per day fresh, frozen, or canned, without added fat, sauce, or salt **Fruits** 2–4 servings per day fresh, frozen, canned, dried **Dairy Products** 2–3 servings per day Fat-free, ½%, 1% milk, buttermilk, yogurt, cottage cheese; fat-free & low-fat cheese **Eggs** ≤2 egg yolks per week Egg whites or egg substitute **Meat, Poultry, Fish** ≤5 oz per day Lean cuts loin, leg, round; extra lean hamburger; cold cuts made with lean meat or soy protein; skinless poultry; fish **Fats and Oils** Amount adjusted to caloric level: Unsaturated oils; soft or liquid margarines and vegetable oil spreads, salad dressings, seeds, and nuts **TLC Diet Options** Stanol/sterol-containing margarines; viscous fiber food sources: barley, oats, psyllium, apples, bananas, berries, citrus fruits, nectarines, peaches, pears, plums, prunes, broccoli, brussels sprouts, carrots, dry beans, peas, soy products (tofu, miso)	**Breads and Cereals** Many bakery products, including doughnuts, biscuits, butter rolls, muffins, croissants, sweet rolls, Danish, cakes, pies, coffee cakes, cookies Many grain-based snacks, including chips, cheese puffs, snack mix, regular crackers, buttered popcorn **Vegetables** Vegetables fried or prepared with butter, cheese, or cream sauce **Fruits** Fruits fried or served with butter or cream **Dairy Products** Whole milk/2% milk, whole-milk yogurt, ice cream, cream, cheese **Eggs** Egg yolks, whole eggs **Meat, Poultry, Fish** Higher fat meat cuts: ribs, t-bone steak, regular hamburger, bacon, sausage; cold cuts: salami, bologna, hot dogs; organ meats: liver, brains, sweetbreads; poultry with skin; fried meat; fried poultry; fried fish **Fats and Oils** Butter, shortening, stick margarine, chocolate, coconut	**Weigh Regularly** Record weight, BMI, & waist circumference **Lose Weight Gradually** Goal: lose 10% of body weight in 6 months. Lose 1/2 to 1 lb per week **Develop Healthy Eating Patterns** • Choose healthy foods (see Column 1) • Reduce intake of foods in Column 2 • Limit number of eating occasions • Select sensible portion sizes • Avoid second helpings • Identify and reduce hidden fat by reading food labels to choose products lower in saturated fat and calories, and ask about ingredients in ready-to-eat foods prepared away from home • Identify and reduce sources of excess carbohydrates such as fat-free and regular crackers; cookies and other desserts; snacks; and sugar-containing beverages	**Make Physical Activity Part of Daily Routines** • Reduce sedentary time • Walk, wheel, or bike-ride more, drive less; Take the stairs instead of an elevator; Get off the bus a few stops early and walk the remaining distance; Mow the lawn with a push mower; Rake leaves; Garden; Push a stroller; Clean the house; Do exercises or pedal a stationary bike while watching television; Play actively with children; Take a brisk 10-minute walk or wheel before work, during your work break, and after dinner **Make Physical Activity Part of Exercise or Recreational Activities** • Walk, wheel, or jog; Bicycle or use an arm pedal bicycle; Swim or do water aerobics; Play basketball; Join a sports team; Play wheelchair sports; Golf (pull cart or carry clubs); Canoe; Cross-country ski; Dance; Take part in an exercise program at work, home, school, or gym

3. Components of the TLC diet

a. Major nutrient components

The major LDL-raising dietary constituents are saturated fat and cholesterol. A reduction in intakes of these components is the core of the TLC Diet. The scientific foundation for the relationship between high intakes of saturated fat and increased LDL levels dates back several decades and consists of several lines of evidence: observational studies, metabolic and controlled feeding studies, and clinical studies, including randomized clinical trials. These data have been reviewed in detail in previous reports of the NCEP (National Cholesterol Education Program 1993; 1994; National Cholesterol Education Program 1990; Report of the Expert Panel on Population Strategies . . . 1991), the U.S. Dietary Guidelines Committees (U.S. Department of Agriculture . . . 2000), and the American Heart Association (Krauss et al., 1996). The other major nutrients—unsaturated fats, protein, and carbohydrates—do not raise LDL cholesterol levels. In developing an LDL-lowering diet for ATP III, consideration was given not only to these long-established factors but also to new and emerging data that support the importance of the appropriate distribution of other nutrients that are related to cardiovascular health as well as general health. Therefore, the rationale for the recommendations for each component of the TLC diet will be described briefly.

1) Saturated fatty acids

Saturated fatty acids are a major dietary determinant of LDL cholesterol level (U.S. Department of Agriculture . . . 2000). The effects of saturated fatty acids on serum total cholesterol (and LDL cholesterol) levels have been studied extensively (Grundy and Denke, 1990). Several meta-analyses and reviews have been carried out to estimate the impact of saturated fatty acids on cholesterol levels (Mensink and Katan, 1992; Kris-Etherton and Yu, 1997). These analyses indicate that for every 1 percent increase in calories from saturated fatty acids as a percent of total energy, the serum LDL cholesterol rises about 2 percent. Conversely, a 1 percent reduction in saturated fatty acids will reduce serum cholesterol by about 2 percent. Recent trials confirm the efficacy of diets low in saturated fatty acids for lowering LDL levels. For example, the DELTA Study (Ginsberg et al., 1998) investigated the effects of reducing dietary saturated fatty acids from 15 percent of total calories to 6.1 percent of total calories. On the diet low in saturated fatty acids, LDL cholesterol was reduced by 11 percent. Another study, beFIT (Walden et al., 1997; 2000), tested effects of an NCEP therapeutic diet in individuals with hypercholesterolemia with and without hypertriglyceridemia. Compared to the participants' baseline diet, LDL cholesterol levels were reduced on the therapeutic diet by approximately 8 percent. Large-scale randomized controlled trials have been carried out to assess the safety of reduced intakes of saturated fatty acids and cholesterol in children and have found no evidence for compromised growth or development (Niinikoski et al., 1997; Obarzanek et al., 1997).

***Evidence statements**: There is a dose response relationship between saturated fatty acids and LDL cholesterol levels. Diets high in saturated fatty acids raise serum LDL cholesterol levels (A1). Reduction in intakes of saturated fatty acids lowers LDL cholesterol levels (A1, B1).*

The beneficial effects of reducing saturated fatty acids and cholesterol in the diet can be enhanced by weight reduction in overweight persons. Several studies have shown that LDL cholesterol levels can be lowered through weight reduction in overweight persons (National Institutes of Health 1998a,b). And most important, as shown in the MRFIT study, weight reduction will enhance serum cholesterol lowering brought about by a reduction in intakes of saturated fatty acids and cholesterol (Caggiula et al., 1981; Stamler et al., 1997).

Evidence statements: *Weight reduction of even a few pounds will reduce LDL levels regardless of the nutrient composition of the weight loss diet (A2), but weight reduction achieved through a calorie-controlled diet low in saturated fatty acids and cholesterol will enhance and sustain LDL cholesterol lowering (A2).*
Recommendation*: Weight loss through reduced caloric intake and increased levels of physical activity should be encouraged in all overweight persons. Prevention of weight gain also should be emphasized for all persons.*

Epidemiological studies show that populations that consume high amounts of saturated fatty acids and cholesterol have a high risk for CHD (Keys 1980, 1986). The evidence that lowering serum cholesterol levels by decreasing intakes of saturated fatty acids reduces the risk for CHD has been demonstrated in the meta-analysis by Gordon (1995a,b). This analysis included six robust dietary trials, in aggregate including 6,356 individuals. It showed that lowering serum cholesterol levels by reducing the intake of saturated fatty acids significantly decreased the incidence of CHD by 24 percent. There was also a trend toward a decrease in coronary mortality (21 percent) and total mortality (6 percent). No increase in non-CVD mortality was found.

The data from dietary trials, in combination with the results of controlled clinical trials with cholesterol-lowering medications (Gould et al., 1998; Brousseau and Schafer, 2000), document that reducing serum cholesterol and LDL cholesterol by diet alone or with pharmacological means will reduce CHD endpoints. The current American diet contains an average of about 11 percent of total calories as saturated fatty acids. The major sources of saturated fatty acids in the diet are high-fat dairy products (whole milk, cheese, butter, ice cream, and cream); high-fat meats; tropical oils such as palm oil, coconut oil, and palm kernel oil; and baked products and mixed dishes containing dairy fats, shortening, and tropical oils. To maximize LDL cholesterol lowering by reducing saturated fatty acid intake in the therapeutic diet, it will be necessary to lower intakes from the population mean intake of approximately 11 percent to <7 percent of total energy.

Evidence statements: *High intakes of saturated fatty acids are associated with high population rates of CHD (C2). Reduction in intake of saturated fatty acids will reduce risk for CHD (A1, B1).*
Recommendation: *The therapeutic diet to maximize LDL cholesterol lowering should contain less than 7 percent of total calories as saturated fatty acids.*

2) Trans fatty acid

Trans fatty acids are those in which double bonds are in the *trans* configuration. They are generally produced by hydrogenation of vegetable oils but some are found naturally in animal fats. Substantial evidence from randomized clinical trials indicates that *trans* fatty acids raise LDL cholesterol levels, compared with unsaturated fatty acids (Lichtenstein et al., 1993; 1999; Judd et al., 1994; 1998; Noakes and Clifton, 1998; Aro et al., 1997; Almendingen et al., 1995; Wood et al., 1993a,b; Nestel et al., 1992; Zock and Katan, 1992; Katan et al., 1995; Mensink and Katan, 1990). These studies also show that when *trans* fatty acids are substituted for saturated fatty acids, HDL cholesterol levels are lower (Ascherio et al., 1999), with a dose response effect observed. Recent United States data show that the use of liquid vegetable oil or semiliquid margarine results in the most favorable total and LDL cholesterol levels and ratios of total cholesterol to HDL cholesterol, whereas the use of butter or stick margarine results in the worst lipid levels (Lichtenstein et al., 1999). In addition, evidence from some epidemiological cohort studies suggests that high intakes of *trans* fatty acids are associated with higher risk for CHD (Kromhout 1995; Willett 1993; Pietinen 1997; and Hu 1999a). Whether this association is due to adverse effects of *trans* fatty acids on lipoproteins, to other adverse actions, or to confounding variables is uncertain.

The mean U.S. level of *trans* fatty acids intake is about 2.6 percent of total energy (compared with saturated fatty acids intake of ~11 percent of energy). Major sources of *trans* fatty acids in the diet include products made from partially hydrogenated oils such as baked products including crackers, cookies, doughnuts, breads, and products like french fries or chicken fried in hydrogenated shortening. Animal sources including dairy products provide smaller amounts of *trans* fatty acids. Soft margarines, tub and liquid, and vegetable oil spreads have low amounts of *trans* fatty acids. Some margarines and spreads are now *trans*-fatty acid free. Some hydrogenation of vegetable oils is the primary technology currently used to provide form to food products, so that they can be eaten out of the hand, rather than with a spoon.

Evidence statements: *Trans fatty acids raise serum LDL cholesterol levels (A2). Through this mechanism, higher intakes of trans fatty acids should increase risk for CHD. Prospective studies support an association between higher intakes of trans fatty acids and CHD incidence (C2). However, trans fatty acids are not classified as saturated fatty acids, nor are they included in the quantitative recommendations for saturated fatty acid intake of <7 percent of calories in TLC.*
Recommendation: *Intakes of trans fatty acids should be kept low. The use of liquid vegetable oil, soft margarine, and trans fatty acid-free margarine are encouraged instead of butter, stick margarine, and shortening.*

3) Dietary cholesterol

Dietary cholesterol causes marked hypercholesterolemia in many laboratory animals, including nonhuman primates. High intakes of cholesterol in humans, however, do not cause such a marked increase in serum cholesterol. Nonetheless, controlled metabolic studies in humans

indicate that high cholesterol intakes raise LDL cholesterol levels. The degree of rise varies from person to person, as is true for all nutrients. Meta-analyses of studies done in controlled settings confirm the LDL-raising action of dietary cholesterol (Hopkins 1992; Clarke et al., 1997). A recent meta-analysis showed that dietary cholesterol raises the ratio of total to HDL cholesterol, adversely affecting the serum cholesterol profile (Weggemans et al., 2001). A lesser effect of dietary cholesterol has been found in studies carried out in the outpatient setting (Howell et al., 1997); in this circumstance, failure to detect the full effect of dietary cholesterol is likely related to lack of tight metabolic control. On average, the response of serum cholesterol to dietary cholesterol as revealed in tightly controlled studies is approximately 10 mg/dL per 100 mg dietary cholesterol per 1000 Kcal (National Research Council 1989; Grundy et al., 1988).

In the past 40 years, there has been a progressive decline in intakes of dietary cholesterol. This has been the result of decreased intakes of eggs, high-fat meat, and high-fat dairy products. This reduction in cholesterol intake, along with a substantial reduction in the proportion of calories from saturated fatty acids, corresponds with the decline in serum cholesterol levels that has occurred in the U.S. population over four decades (Ernst et al., 1997). At present, the average U.S. daily consumption of cholesterol is 256 mg, higher for men (331mg) than for women (213 mg) (Tippett and Cleveland, 2000). Eggs contribute about one-third of the cholesterol in the food supply and this fraction has increased somewhat in recent years (Putnam and Gerrior, 1999). Other sources of dietary cholesterol include animal products, dairy, meats, poultry, and shellfish.

Evidence statements: *Higher intakes of dietary cholesterol raise serum LDL cholesterol levels in humans (A2, B1). Through this mechanism, higher intakes of dietary cholesterol should raise the risk for CHD. Reducing cholesterol intakes from high to low decreases serum LDL cholesterol in most persons (A2, B1).*
Recommendation: *Less than 200 mg per day of cholesterol should be consumed in the therapeutic diet to maximize the amount of LDL cholesterol lowering that can be achieved through reduction in dietary cholesterol.*

Some epidemiological data, namely the Western Electric Study, suggest dietary cholesterol increases heart disease risk independently of its effect on serum LDL cholesterol levels (Stamler and Shekelle, 1988). In contrast, data from two prospective cohort studies, the Nurses Health Study and the Health Professionals Study, found no significant association between frequency of reported egg consumption and CHD, except among diabetic women (Hu et al., 1999b).

4) Monounsaturated fatty acids

The most common form of monounsaturated fatty acids is oleic acid, which occurs in the cis form. Substitution of cis-monounsaturated fatty acids for saturated fatty acids results in a fall in LDL cholesterol levels (Mensink and Katan, 1992). Moreover, substitution of monounsaturated fatty acids for saturated fatty acids results in little or no decrease in HDL cholesterol and does not increase triglycerides as occurs with very high intakes of carbohydrates (>60 percent of total energy) (Mensink and Katan, 1992; Garg 1998,1992; Kris-Etherton 1999).

Monounsaturated fatty acids—as part of a diet that is low in saturated fatty acids and cholesterol and rich in vegetables, fruits, and grain products—have received increased attention as being potentially beneficial for risk reduction because of their association with low rates of CHD in olive-oil consuming populations of the Mediterranean basin (Keys et al., 1980, 1984, 1986). Despite epidemiological support for higher intakes of monounsaturated fatty acids, there are no controlled clinical trials that are designed to compare effects of monounsaturated and saturated fatty acids on CHD endpoints. This lack of data contrasts with several trials that replaced saturated fat with polyunsaturated fat.

Evidence statements: *Monounsaturated fatty acids lower LDL cholesterol relative to saturated fatty acids (A2, B2). Monounsaturated fatty acids do not lower HDL cholesterol nor raise triglycerides (A2, B2).*
Evidence Statement: *Dietary patterns that are rich in monounsaturated fatty acids provided by plant sources and rich in fruits, vegetables, and whole grains and low in saturated fatty acids are associated with decreased CHD risk (C1). However, the benefits of replacement of saturated fatty acids with monounsaturated fatty acids has not been adequately tested in controlled clinical trials.*
Recommendations: *Monounsaturated fatty acids are one form of unsaturated fatty acid that can replace saturated fatty acids. Intake of monounsaturated fatty acids can range up to 20 percent of total calories. Most monounsaturated fatty acids should be derived from vegetable sources, including plant oils and nuts.*

5) Polyunsaturated fatty acids

Polyunsaturated fatty acids, consisting mainly of n-6 linoleic acid, reduce LDL cholesterol levels when substituted for saturated fatty acids. At high intakes, linoleic acid also can produce small reductions in HDL cholesterol and triglycerides, although these responses are variable. Compared to cis-monounsaturated fatty acids, polyunsaturated fatty acids often cause a slightly greater reduction in LDL cholesterol levels (Mensink and Katan, 1992).

Several controlled clinical trials have compared the effects of polyunsaturated fatty acids, as a replacement for saturated fatty acids, on coronary endpoints (National Research Council 1989). Meta-analysis of trial results indicates that substitution of polyunsaturated fatty acids for saturated fatty acids reduces risk for CHD (Gordon 1995a,b; Mensink and Katan, 1992). This positive result is supported by research in primates that indicates that polyunsaturated fatty acids are antiatherogenic when substituted for saturated fatty acids (Rudel et al., 1995).

Despite evidence of CHD risk reduction from polyunsaturated fatty acids, there are no large populations that have consumed large quantities of polyunsaturated fatty acids for long periods. Thus, high intakes have not been proven safe in large populations; this introduces a note of caution for recommending high intakes.

Evidence statements: *Linoleic acid, a polyunsaturated fatty acid, reduces LDL cholesterol levels when substituted for saturated fatty acids in the diet (A1, B1). Polyunsaturated fatty acids can also cause small reductions in HDL cholesterol when compared with monounsaturated fatty acids (B2). Controlled clinical trials indicate that substitution of polyunsaturated fatty acids for saturated fatty acids reduces risk for CHD (A2, B2).*
Recommendations: *Polyunsaturated fatty acids are one form of unsaturated fatty acids that can replace saturated fat. Most polyunsaturated fatty acids should be derived from liquid vegetable oils, semi-liquid margarines, and other margarines low in trans fatty acids. Intakes of polyunsaturated fat can range up to 10 percent of total calories.*

6) Total fat

Among the fatty acids that make up the total fat in the diet, only saturated fatty acids and *trans* fatty acids raise LDL cholesterol levels (National Research Council 1989). Thus, serum levels of LDL cholesterol are independent of intakes of total fat per se. ATP II (National Cholesterol Education Program 1993, 1994) advised limiting total fat in Step I and Step II (TLC) diets to ≤30 percent of calories primarily as a means of achieving lower intakes of saturated fatty acids. The focus of the dietary approach to reducing CHD risk then and now is on dietary fatty acids that raise LDL cholesterol concentrations.

Evidence statement: *Unsaturated fatty acids do not raise LDL cholesterol concentrations when substituted for carbohydrates in the diet (A2, B2).*
Recommendation: *It is not necessary to restrict total fat intake for the express purpose of reducing LDL cholesterol levels, provided saturated fatty acids are reduced to goal levels.*

For many years, other public health groups have recommended low intakes of total fat in an effort to curtail obesity and to reduce the risk for some forms of cancer. These recommendations were based largely on experiments in laboratory animals and cross-cultural studies. Several short-term studies also suggest that higher fat intakes (>35 percent of calories) modify the body's metabolism in ways that favor fat accumulation (Astrup 1996; Astrup et al., 1997; Jeffery et al., 1995; Nelson and Tucker, 1996; Proserpi et al., 1997; Schutz 1995). However, isocaloric exchange of fat for carbohydrate does not produce weight gain over a period of many months (Hirsh et al., 1998; Leibel et al., 1992). Further, although some prospective studies have suggested a relationship between the percentage of dietary fat and obesity (Heitmann et al., 1995; Lissner and Heitmann, 1995), recent prospective studies (or meta-analysis of studies) have failed to detect a causative link between them (Seidell 1998; Willett 1998). Evidence related to these areas is reviewed in detail in the recent rationale report of the Dietary Guidelines for Americans (U.S. Department of Agriculture . . . 2000).

Studies in laboratory animals and cross-cultural studies have suggested a relationship between fat intake and risk for certain cancers (Greenwald et al., 1997; Harrison and Waterbor, 1999; Slattery et al., 1997a,b). Moreover, a major clinical trial is presently underway to determine

whether low-fat diets will reduce risk for breast cancer in women; this trial is a component of the Women's Health Initiative (Women's Health Initiative Study Group 1998) and is scheduled to end in 2005. Even so, recent prospective studies have not confirmed an association between fat intake and cancer (Giovannucci and Goldin, 1997; Holmes et al., 1999; Kolonel et al., 1999; Rose 1997). Thus, a strong recommendation to reduce fat intake for the purpose of preventing cancer does not seem warranted at this time (U.S. Department of Agriculture . . . 2000).

The Dietary Guidelines for Americans (U.S. Department of Agriculture . . . 2000) noted that some investigators are concerned that recommendations that emphasize lower total fat intakes (<30 percent energy) may have led to an overconsumption of carbohydrate, contributing to an increased prevalence of obesity. Moreover, very high intakes of carbohydrates (>60 percent of calories) in overweight/obese persons can aggravate some of the risk factors of the metabolic syndrome (Garg et al., 1998,1992; Chen 1995; Knopp et al., 1997; Grundy 1986; Mensink 1987). These latter responses have led some investigators to propose that populations with a high prevalence of insulin resistance and the metabolic syndrome should avoid very high-carbohydrate diets and should consume relatively more unsaturated fatty acids (Katan et al., 1997).

Evidence Statement: *The percentage of total fat in the diet, independent of caloric intake, has not been documented to be related to body weight or risk for cancer in the general population (U.S. Department of Agriculture . . . 2000). Short-term studies suggest that very high fat intakes (>35 percent of calories) modify metabolism in ways that could promote obesity (C2). On the other hand, very high carbohydrate intakes (>60 percent of calories) aggravate some of the lipid and nonlipid risk factors common in the metabolic syndrome (A2, B2, C2).*
Recommendations: *Dietary fat recommendations should emphasize reduction in saturated fatty acids. Further, for persons with lipid disorders or the metabolic syndrome, extremes of total fat intake—either high or low—should be avoided. In such persons, total fat intakes should range from 25–35 percent of calories. For some persons with the metabolic syndrome, a total fat intake of 30–35 percent may reduce lipid and nonlipid risk factors.*

7) Carbohydrate

When carbohydrates are substituted for saturated fatty acids, the fall in LDL cholesterol levels equals that with monounsaturated fatty acids. However, compared with monounsaturated fatty acids, substitution of carbohydrate for saturated fatty acids frequently causes a fall in HDL cholesterol and a rise in triglyceride (Mensink and Katan, 1992; Garg 1998; Turley et al., 1998; Knopp et al., 1997). This effect apparently persists in the long term, as suggested by differences in population lipid levels in the presence of different habitual diets (Knuiman et al., 1987; West et al., 1990). When carbohydrate is consumed along with high-fiber diets, however, the rise in triglycerides or fall in HDL cholesterol has been reported to be reduced (Jenkins et al., 1993; Turley et al., 1998; Vuksan et al., 2000).

Digestible carbohydrates include starches (complex carbohydrates) and sugar. Some foods, such as whole grains, vegetables, and some fruits, contain viscous fiber that helps to lower LDL cholesterol as well (see Table V.2–5). Sugars and starches occur naturally in many foods that

also supply other important nutrients. Examples of these foods include fat-free and low-fat dairy products, fruits, some vegetables, breads, cereals, and grains. Inclusion of these foods helps provide daily recommended intakes of essential nutrients (U.S. Department of Agriculture . . . 2000).

An old concept receiving recent attention is the "glycemic" potential of different foods. Glycemic index refers to the value obtained by feeding a carbohydrate load and measuring the level of blood glucose. Study of this factor is complicated because there is a wide range in the glycemic index for each group of foods, attributed to factors such as its form when eaten, the way it is processed, how it is chewed, how it is emptied from the stomach, and an individual's physiologic and metabolic responses (Levin 1999). To date the glycemic index has not been widely accepted as a practical means by which to select specific carbohydrate-containing foods for dietary therapy (U.S. Department of Agriculture . . . 2000).

Evidence Statement: *When carbohydrate is substituted for saturated fatty acids, LDL cholesterol levels fall (A2, B2). However, very high intakes of carbohydrate (>60 percent of total calories) are accompanied by a reduction in HDL cholesterol and a rise in triglyceride (B1, C1). These latter responses are sometimes reduced when carbohydate is consumed with viscous fiber (C2); however, it has not been demonstrated convincingly that viscous fiber can fully negate the triglyceride-raising or HDL-lowering actions of very high intakes of carbohydrates.*
Recommendation: *Carbohydrate intakes should be limited to 60 percent of total calories in persons with the metabolic syndrome. Lower intakes (e.g., 50 percent of calories) should be considered for persons with elevated triglycerides or low HDL cholesterol. Regardless of intakes, most of the carbohydrate intake should come from grain products, especially whole grains, vegetables, fruits, and fat-free and low-fat dairy products.*

8) Protein

Dietary protein in general has little effect on serum LDL cholesterol level or other lipoprotein fractions. However, substituting soy protein for animal protein has been reported to lower LDL cholesterol (Anderson 1995) (see Section V.3.b.3). Plant sources of protein are predominantly legumes, dry beans, nuts, and, to a lesser extent, grain products and vegetables, which are low in saturated fats and cholesterol. Animal sources of protein that are lower in saturated fat and cholesterol include fat-free and low-fat dairy products, egg whites, fish, skinless poultry, and lean meats.

b. Additional dietary options for LDL lowering

1) Increasing viscous fiber in the diet

Recent reports indicate that viscous (soluble) forms of dietary fiber can reduce LDL cholesterol levels. In contrast, insoluble fiber does not significantly affect LDL cholesterol (Anderson and Hannah, 1999). On average, an increase in viscous fiber of 5 to10 grams per day is accompanied by an approximately 5 percent reduction in LDL cholesterol (U.S. Department of Health and

Human Services 1997b; 1998a). In a meta-analysis of 67 trials related to oats, pectin, guar, and psyllium, a small but significant reduction in serum total and LDL cholesterol was noted for all sources of viscous fiber in ranges of 2–10 grams per day (Brown et al., 1999). Thus, at present, there is general agreement that viscous fiber (e.g., oats, guar, pectin, and psyllium) decreases serum cholesterol and LDL cholesterol. Because of the favorable effect of viscous fiber on LDL cholesterol levels, the ATP III panel recommends that the therapeutic diet be enriched by foods that provide a total of at least 5–10 grams of viscous fiber daily (see Table V.2–5). Even higher intakes of 10–25 grams per day can be beneficial.

Some investigators report that the consumption of viscous (soluble) fiber (provided by oats, barley, psyllium, pectin-rich fruit, and beans) produces a reduction in HDL cholesterol concentration (Anderson 1995). Other reviews report little, no, or inconsistent effect on HDL cholesterol (U.S. Department of Health and Human Services 1996; 1997a).

Evidence statement: *5–10 grams of viscous fiber per day reduces LDL cholesterol levels by approximately 5 percent (A2, B1).*
Recommendation: *The use of dietary sources of viscous fiber is a therapeutic option to enhance LDL cholesterol lowering.*

2) Plant stanols/sterols

Recent studies have demonstrated the LDL-lowering effect of plant sterols, which are isolated from soybean and tall pine-tree oils. Plant sterols can be esterified to unsaturated fatty acids (creating sterol esters) to increase lipid solubility. Hydrogenating sterols produces plant stanols and, with esterification, stanol esters. The efficacy of plant sterols and plant stanols is considered to be comparable (Hallikainen et al., 1999; Westrate and Meijer, 1998). Because lipids are needed to solubilize stanol/sterol esters, they are usually available in commercial margarines. The presence of plant stanols/sterols is listed on the food label. When margarine products are used, persons must be advised to adjust caloric intake to account for the calories contained in the products.

Data show that plant-derived stanol/sterol esters at dosages of 2 to 3 g/day lower LDL-C levels by 6 to 15 percent with little or no change in HDL cholesterol or triglyceride levels (Vuorio et al., 2000; Gylling and Miettinen 1999a; Gylling et al., 1997; Hallikainen et al., 1999; Hendriks et al., 1999; Miettinen et al., 1995; Vanhanen et al., 1993). The more recent among these studies indicate that maximal lowering of LDL cholesterol occurs at intakes of plant stanol/sterol esters of 2 g/day. LDL reductions also occur in individuals who have both hypercholesterolemia and type 2 diabetes (Gylling and Miettinen, 1994) and in children with hypercholesterolemia (Gylling et al., 1995). A greater percent lowering of LDL occurs in older people than in younger people (Law 2000). No studies have been conducted to determine the effect of plant stanols/sterols on CHD risk, although Law (2000) has recently projected that their use should double the beneficial effect on CHD risk achieved by reducing dietary saturated fatty acids and cholesterol.

Plant sterols/stanols reduce absorption of dietary carotenoids, and decreased levels of plasma beta-carotene have been observed subsequent to consumption of margarines that contain either stanol ester or sterol ester (Westrate and Meijer, 1998). Whether carotenoid decreases are deleterious is unknown, but prudence calls for adhering to current recommendations for intakes of fruits and vegetables with consumption of plant stanols/sterols.

Evidence Statement: *Daily intakes of 2–3 grams per day of plant stanol/sterol esters will reduce LDL cholesterol by 6–15 percent (A2, B1).*
Recommendation: *Plant stanol/sterol esters (2 g/day) are a therapeutic option to enhance LDL cholesterol lowering.*

3) Soy protein

Soy protein included in a diet low in saturated fatty acids and cholesterol can lower levels of total cholesterol and LDL cholesterol in individuals with hypercholesterolemia. Recent reviews (U.S. Department of Health and Human Services 1998b; 1999a) gave particular weight to 16 well-controlled trials that reported intakes of saturated fatty acids and cholesterol. More than half of the studies used more than 40 g soy protein/day in some form. One report (Jenkins 2000b) indicated that 25 g/day soy protein in a diet low in saturated fatty acids and cholesterol lowers LDL cholesterol levels by about 5 percent.

The specific processing of the soybean determines the characteristics of soy protein, such as the content of isoflavones, fiber, and saponins. There is some evidence that an LDL-lowering effect is dependent upon isoflavone content (Crouse et al., 1999) but conclusive data are lacking. Since there are inconsistent findings regarding both the dose and the potential benefit of soy protein, soy protein's major role in LDL-lowering may be to help reduce the intake of animal food products with their higher content of saturated fatty acids.

Evidence statement: *High intakes of soy protein can cause small reductions in LDL cholesterol levels, especially when it replaces animal food products (A2, B2).*
Recommendation: *Food sources containing soy protein are acceptable as replacements for animal food products containing animal fats.*

c. Other dietary factors that may reduce baseline risk for CHD

Epidemiological studies strongly suggest that other nutrient factors affect baseline risk for CHD. For example, in the Mediterranean region, where the diet is rich in fruits and vegetables, whole grains, ocean fish, and unsaturated fatty acids, the risk for CHD appears to be lower than predicted by the major risk factors. In contrast, in regions without this dietary pattern, such as Eastern Europe and Russia, CHD rates are higher than predicted by the prevalence of CHD risk factors. Such observational data provide a basis for a general recommendation for a dietary

pattern that is consistent with a low baseline population risk. The Dietary Guidelines for Americans, 2000, were crafted to facilitate reduction in baseline risk for CHD (Table V.2–3).

In addition, nutritional research has focused on several specific factors that may have unique properties to reduce risk for CHD. The status of these emerging dietary factors are reviewed below and summarized in evidence statements.

1) n-3 (omega-3) polyunsaturated fatty acids

Polyunsaturated fatty acids of the n-3 (omega-3) type occur as alpha-linolenic acid (18:3), primarily in certain vegetable sources such as soybean, canola oil and English walnuts, and in fish oils as eicosapentaenoic acid (EPA) (20:5) and docosahexaenoic acid (DHA) (22:6) (*marine n-3 fatty acids)*.

Moderate fish consumption has been associated with reduced sudden cardiac death or reduced CHD mortality in several prospective cohort studies (Albert et al., 1998; Daviglus et al., 1997; Dolecek and Grandits, 1991) but not in others (Morris et al., 1995; Ascherio et al., 1995). One study found a trend toward increased relative risk of CHD death with marine n-3 fatty acids. A nested, case-control study found an inverse relationship between risk for sudden cardiac death and both reported intake of marine n-3 fatty acids and red blood cell n-3 fatty acid level (Siscovick et al., 1995). Postulated mechanisms for the effects of marine n-3 fatty acids on CHD risk include favorable effects on cardiac rhythm, platelet aggregation, inflammatory responses, and serum triglyceride levels. High intakes of marine n-3 fatty acids reduce triglyceride levels (Roche 2000); this effect appears to be secondary to decreased VLDL production (Harris 1989). Generally, marine n-3 fatty acids have no effect on LDL cholesterol levels, but large doses have been shown to reciprocally increase LDL cholesterol levels in persons with hypertriglyceridemia (Harris 1997). Recent data indicate that some fish have a high mercury content and the toxic effects of mercury could attenuate protective effects of fish (National Research Council 1999; Rissanen et al., 2000).

Four clinical trials suggest that n-3 fatty acids from marine or plant sources reduce sudden death and overall death in populations with pre-existing cardiovascular disease. The DART trial (Burr et al., 1989) was a relatively large secondary prevention trial in which subjects advised to eat fatty fish had a 29 percent reduction in 2-year all-cause mortality compared with those not so advised, although myocardial infarction and coronary death were not specifically reduced. The Lyon Heart Trial (de Lorgeril et al, 1999) included increased intakes of alpha-linolenic acid as part of a “Mediterranean” diet. Compared to the control group, subjects consuming the Mediterranean diet had fewer coronary events. The authors attributed some of the benefit to higher intakes of n-3 fatty acids. In a small supplement trial, Singh et al. (1997) treated patients with suspected acute myocardial infarction with fish oil capsules (EPA 1.08 g/day) or mustard oil (alpha-linolenic acid 2.9 g/day) or placebo. After one year, total cardiac events were significantly less in the groups on fish oil and mustard seed oil supplements. Further, the large placebo-controlled, but unblinded Italian GISSI Prevention trial (GISSI-Prevenzione Investigators 1999) administered fish oil supplements containing n-3 fatty acids (1 g fish oil daily, n = 2836 subjects) and compared coronary outcomes to controls (n = 2828). The group receiving fish-oil supplements had a 14 percent reduction in total death and a 17 percent

reduction in cardiovascular death. Other clinical trials are less suggestive of benefit from n-3 fatty acids. Angiographic data fail to show that marine n-3 fatty acids modify coronary lumen size (von Schacky et al., 1999; Sacks 1995). Also, fish oil administration apparently does not prevent restenosis after coronary angioplasty (Leaf 1994). Additional studies are underway to determine the effect of n-3 fatty acids on CHD risk in the U.S. population (U.S. Department of Agriculture . . . 2000).

Based on these findings, the Dietary Guidelines for Americans (U.S. Department of Agriculture . . . 2000) noted that some fish, such as salmon, tuna, and mackerel, contain omega-3 fatty acids that are being studied to determine if they offer protection against heart disease. No quantitative recommendations for n-3 fatty acids were made for the general public.

Evidence statement: *The mechanisms whereby n-3 fatty acids might reduce coronary events are unknown and may be multiple. Prospective data and clinical trial evidence in secondary CHD prevention suggest that higher intakes of n-3 fatty acids reduce risk for coronary events or coronary mortality (A2, C2).*
Recommendation: *Higher dietary intakes of n-3 fatty acids in the form of fatty fish or vegetable oils are an option for reducing risk for CHD. This recommendation is optional because the strength of the evidence is only moderate at present. ATP III supports the American Heart Association's recommendation that fish be included as part of a CHD risk-reduction diet. Fish in general is low in saturated fat and may contain some cardioprotective n-3 fatty acids. However, a dietary recommendation for a specific amount of n-3 fatty acids is not being made (See Section VI for ATP III recommendations on n-3 supplements for reducing risk for CHD.)*

2) Vitamins/antioxidants

a) Folic acid and vitamins B_6 and B_{12}

Folic acid and vitamins B_6 and B_{12} play a role in the metabolism of homocysteine, and levels of these vitamins correlate inversely with homocysteine levels. Data from the Framingham Heart Study suggest that the mandated fortification of cereal grains with folic acid has lowered population mean homocysteine levels as well as the prevalence of hyperhomocysteinemia (Jacques et al., 1999). Many cross-sectional case-control studies and some prospective cohort studies show a positive association between plasma homocysteine levels and CVD risk (Nygard et al., 1997; Graham et al., 1997; Boushey et al., 1995; Perry et al., 1995; Arnesen et al., 1994; Stampfer et al., 1992) but other prospective cohort studies do not (Alfthan et al., 1994;Verhoef et al., 1997; Evans et al., 1997; Folsom et al., 1998).

Despite the fact that homocysteine levels can be reduced with supplements of folate, B_6, and B_{12}, it is not known whether reduction of plasma homocysteine levels by diet and/or vitamin supplements will reduce CVD risk (Stampfer and Malinow, 1992). Several randomized trials are underway to determine if folic acid, vitamin B_6, and vitamin B_{12} will be effective in reducing the risk of heart disease (Clark and Collins, 1998).

The Institute of Medicine has recently published dietary recommendations for folate for the general population (National Research Council 2000a). The recommended dietary allowance (RDA) for folate is 400 micrograms per day. This level of intake was deemed adequate to provide any reduction in risk for cardiovascular disease that can be obtained from dietary folate. An upper limit for folate derived from fortified food or supplements was estimated to be 1000 micrograms per day.

***Evidence statement**: According to the Institute of Medicine, the RDA for folate for adults is 400 micrograms per day, and the upper limit is 1000 micrograms per day. There are no published randomized controlled clinical trials to show whether lowering homocysteine levels through dietary intake or supplements of folate and other B vitamins will reduce the risk for CHD.*
***Recommendation:** ATP III endorses the Institute of Medicine RDA for dietary folate, namely, 400 micrograms per day. Folate should be consumed largely from dietary sources.*

b) Antioxidants

Oxidative stress is a putative cause of atherosclerotic disease. In experimental studies, oxidation of LDL is an important step in the development and progression of CHD. Thus, a large body of research has been directed towards the potential of antioxidants for reducing CHD risk. Antioxidants under investigation include ascorbic acid (vitamin C), alpha-tocopherol (vitamin E), beta-carotene, ubiquinone (coenzyme Q10), bioflavonoids, and selenium.

Several studies in laboratory animals support the concept that antioxidants are antiatherogenic (National Research Council 2000b). Some, but not all, epidemiological data lend additional support to the concept that dietary antioxidants can reduce risk for CHD (National Research Council 2000b). Generally, in populations that consume a dietary pattern rich in fruits and vegetables and other foods high in antioxidants, there is a reduced risk of CHD.

Several controlled clinical trials have been carried out to determine whether supplementation with antioxidants reduces risk for CHD. The Linxian study in China found that supplements of beta-carotene (15 mg/d), vitamin E (30 mg/d), and selenium (15 mcg/d), given at levels obtained from foods, were associated with a non-significant 10 percent decrease in CVD mortality (Blot et al., 1993). In the Alpha-Tocopherol, Beta Carotene Cancer Prevention Study, supplementation with beta-carotene had no beneficial effect on the incidence of myocardial infarction (Alpha-Tocopherol, Beta Carotene Cancer Prevention Study Group 1994). Another trial (Hennekens et al., 1996), found no benefit (or harm) for CHD incidence after 12 years of beta-carotene supplementation in 22,071 male physicians. Finally, in the CARET study, a non-significant 26 percent increase in cardiovascular mortality was reported in a group supplemented with beta-carotene (Omenn et al., 1996).

In the Alpha-Tocopherol, Beta Carotene Cancer Prevention Study, supplementation with small doses of vitamin E in Finnish male smokers had only a marginal effect on incidence of fatal CHD, whereas it had no effect on incidence of nonfatal myocardial infarction (Alpha-Tocopherol, Beta Carotene Cancer Prevention Study Group 1994). In a secondary prevention

trial among patients with CHD, vitamin E supplementation (400 or 800 IU per day during 1.5 years) in the Cambridge Heart Antioxidant Study (CHAOS), significantly reduced the risk for recurrent MI (77 percent). No effect was demonstrated for CVD mortality. A non-significant increase in total mortality was observed in the vitamin E group (Stephens, et al., 1996). Two large-scale clinical trials in patients with established CHD failed to demonstrate a protective effect of vitamin E supplementation on subsequent cardiovascular events (GISSI-Prevenzione Investigators 1999; Heart Outcomes Prevention . . . Investigators 2000a,b).

Thus, in spite of the theoretical benefits of antioxidant vitamins for reducing risk for CHD, this potential has so far not been found in controlled clinical trials that have used a variety of antioxidant mixtures and doses. The failure to demonstrate benefit in controlled trials does not eliminate the possibility of benefit. It does, however, dilute confidence in benefit and stands in the way of a solid recommendation for high intakes of antioxidants for CHD prevention.

The Institute of Medicine has recently released recommendations for Dietary Reference Intakes (DRIs) for antioxidant vitamins. A specific recommendation was not made for beta-carotene because it has not been shown to be an essential nutrient nor have clinical trials demonstrated benefit for reduction in risk for either cardiovascular disease or cancer. The RDA for vitamin C was increased to 75 mg/day for women and 90 mg/day for men. The RDA for Vitamin E was set at 15 mg/day. Vitamin E supplementation was not recommended for prevention of chronic disease because of a lack of convincing evidence of benefit.

Evidence Statement: *Oxidative stress and LDL oxidation appear to be involved in atherogenesis. However, clinical trials to date have failed to demonstrate that supplementation of the diet with antioxidants will reduce risk for CHD (A2).*
Recommendation: *Evidence of CHD risk reduction from dietary antioxidants is not strong enough to justify a recommendation for antioxidant supplementation to reduce CHD risk in clinical practice. ATP III supports current recommendations of the Institute of Medicine's RDAs for dietary antioxidants, i.e., 75 mg and 90 mg per day for women and men, respectively, for vitamin C and 15 mg per day for vitamin E.*

3) Moderate intakes of alcohol

Observational studies consistently show a J-shaped relation between alcohol consumption and total mortality. Moderate alcohol consumption is associated with lower mortality, and higher consumption with higher mortality. The lower mortality appears to be related to CHD death, because CHD accounts for a significant proportion of total deaths. Case-control, cohort, and ecological studies indicate lower risk for CHD at low to moderate alcohol intake (Criqui 1996). A moderate amount of alcohol can be defined as no more than one drink per day for women and no more than two drinks per day for men (Criqui 1987; Dufour 2001). This gender distinction takes into account differences in both weight and metabolism. Moreover, any cardiovascular benefit occurs not in the young age groups but in middle-aged adults, men 45 years of age or older and women 55 years of age or older (Thun et al., 1997). Mechanisms of putative risk reduction from moderate alcohol consumption are unknown; however, it could be due to an

increase in HDL cholesterol and apo A1 and modestly to an improvement in hemostatic factors (Rimm et al., 1999). Prospective cohort studies suggest a similar relationship with CHD regardless of the type of alcoholic beverages consumed (Rimm et al., 1996).

The dangers of overconsumption of alcohol are well known. At higher levels of intake, adverse effects include elevated blood pressure, arrhythmia, and myocardial dysfunction (Criqui 1987, 1996). Alcohol excess also predisposes to acute pancreatitis. Rarely it can precipitate pancreatitis by accentuating a pre-existing hypertriglyceridemia and chylomicronemia (Fortson et al., 1995). A pooled analysis shows that alcohol intake increases the risk of breast cancer in women (Smith-Warner et al., 1998). Since up to 10 percent of U.S. adults misuse alcohol, advice about alcohol intake should be given carefully with both advantages and negatives presented (Criqui 1998). For some persons, the negatives of alcohol consumption will outweigh any advantage.

Evidence Statement: *Moderate intakes of alcohol in middle-aged and older adults may reduce risk for CHD (C2). However, high intakes of alcohol produce multiple adverse effects (C1).*
Recommendation: *No more than two drinks per day for men and no more than one drink per day for women should be consumed. A drink is defined as 5 ounces of wine, 12 ounces of beer, or 1½ ounces of 80 proof whiskey. Persons who do not drink should not be encouraged to initiate regular alcohol consumption.*

4) Dietary sodium, potassium, and calcium

Many individuals with hypercholesterolemia also have hypertension (see Section VII.6). Evidence suggests that even those with normal blood pressure levels can reduce their chances of developing high blood pressure by consuming less salt (National Research Council 1989; JNC VI 1997; Joint National Committee . . . 1997). Studies in diverse populations have shown that a high sodium intake is associated with higher blood pressure (Chobanian and Hill, 2000). Also, a high salt intake increases the amount of calcium excreted in the urine, and has been independently associated with bone loss at the hip (Chobanian and Hill, 2000). The Dietary Approaches to Stopping Hypertension (DASH) trial has provided evidence that a dietary pattern high in fruits, vegetables, low-fat dairy products, whole grains, poultry, fish, and nuts and low in fats, red meat, and sweets—foods that are good sources of potassium, calcium, and magnesium–favorably influences blood pressure even when sodium levels are held constant (Appel et al., 1997), but when these nutrients are consumed in combination with a low sodium intake, 2400 mg or 1800 mg, blood pressure is lowered even more (Sacks et al., 2001).

Evidence Statement: *JNC VI (JNC VI 1997; Joint National Committee . . . 1997) provides a review of the evidence to support the concept that lower salt intake lowers blood pressure or prevents its rise. One clinical trial further shows that the effects of a dietary pattern high in fruits, vegetables, low-fat dairy products, whole grains, poultry, fish, and nuts and low in fats, red meat, and sweets—foods that are good sources of potassium, calcium, and magnesium—to reduce blood pressure are enhanced by a diet low in salt (A2).*

Recommendation: *The Diet and Health report (National Research Council 1989) and JNC VI recommend a sodium intake of <2400 mg/d (no more than 100 mmol/day, 2.4 g sodium or 6.4 g sodium chloride). JNC VI further recommends maintaining adequate intakes of dietary potassium (approximately 90 mmol per day) and enough dietary calcium and magnesium for general health. ATP III affirms these recommendations for persons undergoing cholesterol management in clinical practice.*

5) Herbal or botanical dietary supplements

The 10 top-selling herbal or botanical dietary supplements are cranberry, echinacea, evening primrose, garlic, ginkgo, ginseng, goldenseal, grape seed extract, St. John's wort, and saw palmetto (Borchers et al., 2000). These botanical supplements are available in health food stores, pharmacies, and many supermarkets. Several of the compounds have been promoted as agents to reduce the risk of CHD. Data from controlled trials regarding efficacy and safety are limited, in part because existing food and drug laws do not require demonstration of safety and efficacy to support legal marketing of dietary supplements. Dietary supplements are regulated according to different standards than are drugs. In addition to concerns about efficacy and safety, there is a lack of standardization among brands of botanical supplements. As a result, the amount of bioactive constituent, by which the supplements are hypothesized to influence disease, can differ widely among brands. In the case of garlic, a few randomized controlled studies are available, but the preponderance of available evidence fails to establish that garlic reduces LDL cholesterol levels. Biological plausibility supports use of some supplements, but there are few controlled clinical trials to document benefit. Studies designed to evaluate efficacy for disease endpoints, long-term safety, and drug interaction have not been reported.

Evidence statement: *Despite widespread promotion of several herbal or botanical dietary supplements for prevention of CHD, a paucity of data exists on product standardization, controlled clinical trials for efficacy, and long-term safety and drug interactions. Clinical trial data are not available to support the use of herbal and botanical supplements in the prevention or treatment of heart disease.*

Recommendation: *ATP III does not recommend use of herbal or botanical dietary supplements to reduce risk for CHD. However, health care professionals should query patients to establish whether such products are being used because of the potential for drug interaction.*

6) High protein, high total fat and saturated fat weight loss regimens

Periodically, weight-loss diets high in protein and fat and low in carbohydrate surge in popularity. Such diets will result in weight loss within a few weeks or months if calories are restricted. However, such diets have not been demonstrated to produce long-term weight loss in controlled trials. Although clinical trial data are lacking, several concerns have been expressed about the use of these diets in clinical weight reduction:

- Short-term, extreme diets rarely produce long-term weight reduction.

- High intakes of saturated fats can raise LDL cholesterol.
- Low intakes of fruits, vegetables, and grains can deprive persons of healthful nutrients and are not conducive to long-term health.

Diets popularized as low-carbohydrate, high-fat, high-protein regimens for rapid weight loss should not be confused with ATP III's easing restriction of the percentage of dietary fat for persons with the metabolic syndrome. The latter allows dietary fat to rise to 35 percent of total calories, provided it remains low in saturated fatty acids (<7 percent of total energy) and includes mostly unsaturated fats. This will reduce carbohydrate intake somewhat to prevent the actions of high-carbohydrate diets to raise triglycerides and reduce HDL cholesterol levels. The ATP III recommendation allows for the dietary variety outlined in Dietary Guidelines for Americans 2000 (U.S. Department of Agriculture . . . 2000).

Evidence statement: *High protein, high total fat and saturated fat weight loss regimens have not been demonstrated in controlled clinical trials to produce long-term weight reduction. In addition, their nutrient composition does not appear to be conducive to long-term health.*
Recommendation: *High protein, high total fat and saturated fat weight loss regimens are not recommended for weight reduction in clinical practice.*

4. Management of the metabolic syndrome through life habit changes

a. Weight control

ATP II (National Cholesterol Education Program 1993; 1994) recommended increased emphasis on weight reduction as part of LDL-lowering therapy for overweight/obese persons who enter clinical guidelines for cholesterol management. ATP III confirms this recommendation. However, in ATP III, emphasis on weight reduction is delayed until after other dietary measures are introduced for LDL lowering (reduced intakes of saturated fatty acids and cholesterol and possibly other options for LDL lowering [plant stanols/sterols and increased dietary fiber]) (see Figure V.2–1). The delay in emphasizing weight reduction is to avoid overloading new patients with a multitude of dietary messages and to concentrate first on LDL reduction. After an adequate trial of LDL-lowering measures, attention turns to other lipid risk factors and the metabolic syndrome (see Figure V.2–1). Weight reduction then becomes a major focus of TLC. In 1998, the NHLBI published Clinical Guidelines on the Identification, Evaluation, and Treatment of Overweight and Obesity in Adults from the OEI (National Institutes of Health 1998a,b). This is an evidence-based report, and its recommendations for techniques of weight reduction are accepted by ATP III for persons undergoing management for cholesterol disorders. The ATP III report does not independently develop evidence statements beyond those in the OEI report. ATP III endorses the importance of weight control described in the OEI report. Indeed, weight control alone, in addition to lowering LDL cholesterol, favorably influences all of the risk factors of the metabolic syndrome.

b. Increased regular physical activity

ATP II also recommended increased emphasis on regular physical activity. In ATP III, the emphasis is reinforced with particular attention to its benefits for management of the metabolic syndrome. The recommendation for increased physical activity is introduced when TLC is initiated and the recommendation is reinforced when emphasis shifts to management of the metabolic syndrome (see Figure V.2–1). Physical inactivity is a major risk factor for CHD (U.S. Department of Health and Human Services. Physical activity and health . . . 1996b; Fletcher et al., 1996). It raises risk for CHD in several ways, notably by augmenting the lipid and nonlipid risk factors of the metabolic syndrome. It further enhances risk by impairing cardiovascular fitness and coronary blood flow. Regular physical activity can help reverse these adverse effects. It can have favorable effects on the metabolic syndrome and can reduce VLDL levels, raise HDL cholesterol and, in some persons, lower LDL levels. Regular physical activity lowers blood pressure and reduces insulin resistance. It also has been reported to reduce risk for CHD independently of standard risk factors. The evidence base for the recommendation of increased physical activity as part of cholesterol management is presented in the U.S. Surgeon General's Report on Physical Activity (U.S. Department of Health and Human Services. Physical activity and health . . . 1996b) and will not be detailed in this report. The purposes of regular exercise are to promote energy balance to maintain healthy body weight, to alleviate the metabolic syndrome, and to independently reduce baseline risk for CHD. In certain circumstances, a physician has the option of referring a patient to an exercise specialist for prescription and guidance in exercise training. Exercise specialists can complement nutrition professionals in implementation of the TLC diet by guiding individuals in a healthy exercise program.

5. Practical approach to life habit changes

a. Role of the physician

The physician is crucial to initiating and maintaining the patient's dietary adherence. Physician knowledge, attitude, and motivational skills will strongly influence the success of dietary therapy. A positive attitude combined with effective dietary assessment, initiation of therapy, and followup are essential for initial and long-term adherence. The physician should try to determine the patient's attitude towards acceptance of and commitment to TLC. The physician's key responsibilities include: assessment of CHD risk, dietary assessment, explanation of the problem for the patient, decision about appropriate therapeutic plan, and description of the plan to the patient. The multiple benefits of lifestyle changes should be emphasized. The need for lifestyle change, even when drugs are prescribed, should be stressed. In this section, one model for the role of the physician in the institution and followup of dietary therapy will be described. This model can be modified according to the constraints of the practice setting. The key feature of this model is the introduction of dietary therapy in a stepwise manner, beginning with an emphasis on lowering LDL cholesterol and followed by a shift in emphasis to management of the metabolic syndrome, if the latter is present. The essential steps in this model are shown above in Figure V.2–1.

1) Visit 1: Risk assessment, diet assessment, and initiation of therapeutic lifestyle change

Some persons do not qualify for immediate clinical management to lower LDL because their LDL level is not above the goal for their category of risk for CHD (see Section III). Nonetheless, the physican should appropriately control other risk factors, provide a public health message on overall risk reduction, and prescribe subsequent lipoprotein reevaluation as needed. Suggestions to assist the physician in conveying the public health message are outlined in Table V.1–3.

For persons who require dietary therapy, the first step is assessment of lifestyle habits. CAGE questions provide the physician with a way to rapidly assess current intakes of LDL-raising nutrients (Table V.2–4). A more detailed tool for both assessment and as a guide to TLC is available in Table V.2–6. Therapeutic change in the first visit should begin with the TLC diet. If the patient demonstrates a lack of basic knowledge of the principles of the TLC diet, the physician should consider referral to a nutrition professional for medical nutrition therapy.

2) Visit 2: Intensifying the TLC diet for LDL cholesterol lowering

Approximately 6 weeks after starting the TLC diet, lipoprotein analysis is repeated and assessed. If the LDL cholesterol goal is achieved by 6 weeks, the patient should be commended for his/her adherence and encouraged to continue lifestyle changes (Figure V.2–1). If the LDL goal has not been achieved, the LDL-lowering TLC should be intensified. Depending upon the patient's level of dietary adherence, various options exist. More vigorous reduction in saturated fats and cholesterol, adding plant stanols/sterols (2 g/day), increasing viscous fiber (see Table V.2–5), and referral to a nutrition professional can all enhance LDL lowering.

The physician should not ignore the power of TLC to reduce CHD risk. Despite the marked advances in drug therapy for elevated LDL cholesterol level, ATP III places increased emphasis on nutrition and physical activity for cholesterol management and overall risk reduction. The low prevalence of CHD in populations that consume low intakes of saturated fats and cholesterol and high intakes of other healthful nutrients, and who maintain desirable body weight through balanced caloric intake and output, illustrate what can be achieved without drug therapy (Keys 1984). Moreover, specifically for LDL cholesterol reduction, the combination of several dietary modifications can produce a reduction in LDL levels that rivals reductions produced by standard doses of statins. LDL cholesterol responses shown in Table V.5–2 represent conservative estimates based on the literature. Although cumulative responses have not been documented by clinical trial, a sizable summed response from the multiple components of TLC is likely.

Table V.5–2. Approximate and Cumulative LDL Cholesterol Reduction Achievable By Dietary Modification

Dietary Component	Dietary Change	Approximate LDL Reduction
Major		
Saturated fat	<7% of calories	8–10%
Dietary cholesterol	<200 mg/day	3–5%
Weight reduction	Lose 10 lbs	5–8%
Other LDL-lowering options		
Viscous fiber	5–10 grams/day	3–5%
Plant sterol/stanol esters	2g/day	6–15%
Cumulative estimate		20–30%

Adapted From Jenkins et al., 2000a.

3) Visit 3: Decision about drug therapy; initiating management of the metabolic syndrome

If the LDL cholesterol goal has not been achieved after 3 months of TLC, a decision must be made whether to consider adding drug therapy. If drugs are started, TLC should be continued indefinitely in parallel with drug treatment. Although the apparent ease of drug use is appealing, the additive effect of TLC to drug therapy in LDL cholesterol lowering is substantial and should not be overlooked. For example, Hunninghake et al. (1993) reported an extra 5 percent lowering of LDL cholesterol when lovastatin therapy was combined with dietary therapy. This additional LDL cholesterol lowering equates to doubling the dose of the statin, due to the log-dose characteristics of statin usage. Other studies revealed a much greater LDL reduction when dietary therapy plus plant stanols were combined with statin therapy (Gylling et al., 1997; Blair et al., 2000). These dietary options, if successfully implemented, are preferable to progressively increasing doses of LDL-lowering drugs.

A second purpose of Visit 3 is to initiate lifestyle therapies for the metabolic syndrome, if it is present. Emphasis in TLC shifts to weight control and increased physical activity. The principles of weight control are described in the Obesity Education Initiative report (National Institutes of Health 1998a,b).

Because of the complexities and frequent failures of long-term weight control in clinical practice, consideration should be given to referring overweight or obese individuals to a qualified nutrition professional for medical nutrition therapy.

A second element of treatment of the metabolic syndrome is to increase physical activity. The physician should provide specific recommendations for physical activity depending on the patient's physical well-being and social circumstances. Consideration also can be given to referral to an exercise specialist for guidance if this resource is available. Moderate, sustained exercise can cause a significant reduction in baseline risk for CHD. Examples of moderate intensity exercise that may be useful to individuals are listed in Tables V.2–6 and V.5–3.

Moderate intensity physical activity should be promoted for most people. Moderate amounts of vigorous activity also can be beneficial for some individuals, provided safety is ensured. Suggestions to incorporate more exercise into daily life are shown in Table V.5–4.

Table V.5–3. Examples of Moderate* Physical Activity in Healthy Adults†

- Brisk walking (3–4 mph) for 30–40 minutes
- Swimming—laps for 20 minutes
- Bicycling for pleasure or transportation, 5 miles in 30 minutes
- Volleyball (noncompetitive) for 45 minutes
- Raking leaves for 30 minutes
- Moderate lawn mowing (push a powered mower) for 30 minutes
- Home care—heavy cleaning
- Basketball for 15–20 minutes
- Golf—pulling a cart or carrying clubs
- Social dancing for 30 minutes

* Moderate intensity defined as 4–7 kcal/minute or 3–6 METS. METS (work metabolic rate/resting metabolic rate) are multiples of the resting rates of oxygen consumption during physical activity. One MET represents the approximate rate of oxygen consumption of a seated adult at rest, or about 3.5mL per min per kg.

† This table was adapted from the recommendations of the Surgeon General's Report on Physical Activity and Health (U.S. Department of Health and Human Services. Physical activity and health . . . 1996b) and the Centers for Disease Control and Prevention and American College of Sports Medicine (Pate et al., 1995).

Table V.5–4. Suggestions to Incorporate More Physical Activity into the Day

- Walk more—look for opportunities!
  - Park farther away in parking lots near a mall so you have a longer walk
  - Walk or bike if your destination is just a short distance away
  - Walk up or down 1–2 flights of stairs instead of always taking the elevator
  - Walk after work for 30 minutes before getting in the car and sitting in traffic
  - Walk home from the train or bus—take a longer route so it takes 20 minutes instead of 5–10
  - Walk with a colleague or friend at the start of your lunch hour for 20 minutes
- Do heavy house cleaning, push a stroller, or take walks with your children
- Exercise at home while watching television
- Go dancing or join an exercise program that meets several times per week
- If wheelchair bound, wheel yourself for part of every day in a wheelchair

4) Visit N: Long-term follow-up and monitoring adherence to therapeutic lifestyle changes (TLC)

The patient who has achieved the goal LDL cholesterol as a result of TLC must be monitored for the long term. TLC is maintained indefinitely and reinforced by the physician and, as

appropriate, by a nutrition professional if medical nutrition therapy is necessary. The patient can be counseled quarterly for the first year of long-term monitoring and twice yearly thereafter.

LDL cholesterol is measured prior to each visit, and the results are explained at the counseling session. When no lipoprotein abnormalities other than elevated LDL cholesterol are present, monitoring at 6-month intervals is appropriate. If elevated cholesterol level redevelops, the procedure outlined above for diet therapy of elevated LDL cholesterol should be reinstituted.

Persons who fail to achieve their goal LDL cholesterol by dietary therapy can be classified as having an inadequate response to diet. Such responses fall into four categories:

- *Poor adherence*. Some persons adhere poorly to diet modification despite intensive and prolonged dietary counseling. They are not ready to change for various reasons. Physician endorsement of the importance of diet is essential for facilitating increased interest on the part of the patient. If the patient admits a lack of willingness to change diet or other life habits, drug therapy may be the only reasonable option to effectively lower LDL.
- *Gradual change*. Some individuals modify eating habits only gradually. They may adhere poorly to diet in the first few months but eventually will modify their eating habits to meet the goals of therapy. Up to a year of instruction and counseling may be required for these persons. This is especially true for persons who are following a weight reduction plan. Ongoing follow-up and reinforcement is crucial for developing long-term adherence. A continued effort to achieve adherence to life-habit changes should not be abandoned if drug therapy is started.
- *Poor responders*. A minority of persons are non-responders to dietary therapy and will have high LDL cholesterol levels that are inherently resistant to dietary modification despite good adherence (Denke 1994, 1995; Denke and Grundy, 1994). The mechanisms for this resistance are not well understood. Recognition of such persons is important, and care must be taken not to accuse them of failing to adhere to diet when they are non-responders. Drug therapy may be the only effective means of treatment of high blood cholesterol in such persons, but continued adherence to TLC is helpful for maintaining an overall healthful dietary pattern.
- *Inadequate responders*. Persons with severe elevations of LDL cholesterol often do respond to dietary therapy, but the cholesterol lowering achieved is inadequate to reach the LDL cholesterol goal. For such persons, a 3-month period of intensive diet therapy before adding drugs is not necessary.

b. Role of nurses, physician assistants, and pharmacists

Other health professionals associated with the physician facilitate patient management. The role of nutrition professionals is addressed in more detail below. Other health professionals—nurses, physician assistants, nurse clinicians, pharmacists, and other professionals—can participate in patient education (e.g., explaining the rationale for dietary change, goal setting, selection of appropriate foods, diet adherence), promoting behavioral changes, and monitoring dietary changes. These health professionals should receive appropriate training in dietary assessment, dietary education, and counseling. Hospital nurses play a vital role in guiding patients during

hospital admissions for acute coronary events. NCEP and AHA offer various educational materials to assist in training health professionals.

c. Specific role of registered dietitians and other qualified nutrition professionals

Registered and/or licensed dietitians are certified providers of medical nutrition therapy (MNT), and qualify for Medicare reimbursement. Individual state licensure laws have established credentials for determining qualifications for nutrition counselors. Dietitians with expertise and experience in dietary counseling for lipid lowering can be especially effective in facilitating adherence to TLC. Registered dietitians and other licensed nutritionists can be located through local hospitals and state and district affiliates of the American Dietetic Association. The American Dietetic Association (www.eatright.org; 216 W. Jackson Blvd., Suite 800, Chicago, IL 60606-6995; 312-899-0040) maintains a roster of dietitians and responds to requests in writing or e-mail for assistance in locating a registered dietitian in a given area. Dietitians with particular expertise in cholesterol management are available in most large medical centers where they are often part of a multidisciplinary lipid clinic or cardiac rehabilitation team.

Medical nutrition therapy provided by a registered dietitian is a service that involves a comprehensive assessment of a patient's overall nutritional status, medical data, and diet history, followed by intervention to prescribe a personalized course of treatment.

The following Medical Nutrition Therapy CPT Codes can be found in the American Medical Association Current Procedural Terminology CPT 2000, pg. 300:

- 97802 Medical nutrition therapy; initial assessment and intervention, individual face-to-face with the patient, 15 minutes each
- 97803 reassessment and intervention, individual face-to-face with the patient, 15 minutes each
- 97804 group (2 or more individual(s), 30 minutes each

(For medical nutrition therapy assessment and/or intervention performed by a physician, see Evaluation and Management or Preventive Medicine service codes.)

CPT codes currently cover consideration of MNT for management of diabetes mellitus and renal disease.

1) Role of the nutrition professional in LDL-lowering therapy

When the physician chooses to consult a nutrition professional (dietitian) at Visits 1 or 2 for medical nutrition therapy, the goal is to enhance adherence to TLC. Medical nutrition therapy should start with dietary assessment, including the patient's motivational level and willingness to change. A dietary assessment questionnaire, MEDFICTS, which was originally developed for and printed in ATP II (National Cholesterol Education Program 1993,1994) is included in Diet Appendix A. Other cardiovascular dietary assessment tools are also available (Ammerman et. al., 1991; Connor et al., 1992; Gans et al., 1993; Kris-Etherton et al., 2001; Kristal et al., 1990; Retzlaff et al., 1997; Peters et al., 1994). Proper assessment leads to a tailored dietary

prescription. This prescription then goes to the physician, who can encourage adherence and monitor progress.

a) First: dietary assessment

A thorough and detailed assessment of the patient's knowledge, attitudes, and behavior regarding diet is essential for effective nutrition counseling. Assessment requires attention to dietary history, cultural influences, and current eating habits. It also includes recording the patient's weight and weight history, BMI, and waist circumference. The presence of abdominal obesity points to the metabolic syndrome. To assess current eating habits, the following information is needed:

- What times of the day does the patient usually eat?
- Are some meals routinely skipped?
- At what time does the patient eat his/her largest meal?
- Where are meals typically prepared and eaten (e.g., in a restaurant, work cafeteria, fast-food restaurant, deli, at home, or in the homes of others)?
- Are there occasions when stress increases food consumption?
- Are meals eaten at home purchased out and brought in, prepared from processed pre-packaged foods, or prepared fresh from the market?
- Which are favorite foods and what foods are disliked?
- Who is responsible for food shopping and preparation?
- What foods will be most difficult to increase or decrease?
- How well does the patient recognize serving sizes?

The nutrition professional should assess the patient's general knowledge of nutrition as it relates to elevated LDL cholesterol, the ability to read labels, educational level, motivation, attitudes toward diet, and the extent to which family members can facilitate dietary changes.

b) Dietary guidance on adopting the TLC *Diet*

To help patients adapt to the TLC Diet, the dietitian can:

- Focus on dietary patterns to facilitate LDL lowering. These patterns are consistent with the Dietary Guidelines for Americans 2000 (U.S. Department of Agriculture . . . 2000) to achieve overall health and to further reduce baseline risk for CHD. This eating pattern is recommended for the entire family.
- Seek mutual agreement on an overall plan for diet modification as well as specific foods and eating habits that need to be changed. Emphasis goes first to dietary habits that affect LDL cholesterol levels. Highest on the list are foods rich in saturated fatty acids and cholesterol. The dietitian can review options for choosing preferred foods that lower LDL levels. The need for self-monitoring is reinforced; and simple approaches to tracking saturated fat, fiber, fruit, and vegetable intake are provided. Weight reduction includes learning how to control portion sizes. Also, documenting preparation and the quantities of

different foods helps in long-term adherence. Practical teaching with measuring cups, spoons, food models, or even a food scale will enhance patient understanding. Keeping a food record during weekends and weekdays can facilitate discussion with the dietitian. Electronic (e-mail) links between dietitian and patient may enhance checking food records or reporting self-monitoring activities.

- Help patients identify sources of saturated fat in their usual diet, especially "hidden" fats in foods, such as baked goods, cheese, salad dressings, and other processed foods. Advice on alternative food choices, including snack foods, should be provided. For persons willing to prepare foods at home, appropriate techniques and cooking methods can be addressed. For those who eat out regularly, guidance on how to select from a menu and purchase premade take-out food should also be given.
- Apply motivational interviewing techniques to provide encouragement and to empower patients to choose wisely on different eating occasions. Gradual, step-wise changes in current eating habits are more likely to achieve long-term adherence than drastic changes. Starting with a specific food or food group, such as the type of milk used, how to reduce portion size of meats, how to substitute egg whites for whole eggs in baking, or how to use margarines and oils in the place of fats rich in saturated fatty acids are excellent topics to pursue. The dietitian should involve other individuals of significance (e.g., parents, spouse, and children) in dietary instructions.
- Recommend a variety of foods from all food groups to help achieve adequate nutrient intake: vegetables, fruits, grain products, potatoes and legumes, dairy products, and lean meat, poultry, and fish. Use of specially prepared processed foods, fat-free or fat modified snacks, desserts, etc. is not necessary, although some persons find these food choices appealing.
- Promote use of the Nutrition Facts food label to help patients learn to gauge saturated fat and cholesterol intakes. Saturated fat amounts listed on the Nutrition Facts food label correspond to 10 percent of calories; still lower intakes are needed to attain <7 percent. Persons should should be taught to routinely read the labels of all processed foods.

c) Specific foods and preparation techniques

Recommended food choices for the TLC Diet are summarized in Table V.2–6. This diet can be both tasty and nutritious. Many choices of high-quality and recommended foods are available in supermarkets, restaurants and as take-out options.

To decrease intake of saturated fat, total fat, and cholesterol, the emphasis of the diet should be on consumption of vegetables; fruits; breads, cereals, rice, legumes, and pasta; skim milk and skim milk products; and poultry, fish, and lean meat. There are many different eating styles in the United States that reflect diverse cultures and practices. Special attention to unique dietary preferences based on diverse cultures and eating habits can facilitate adoption of the TLC diet. Sample menus are presented in Diet Appendix B.

Food preparation techniques should emphasize lower fat cooking and preparation methods (broiling, baking, grilling, steaming, poaching without added fat, trimming fat from meat, draining fat after cooking, and removing skin from poultry). Liquid vegetable oils high in unsaturated fatty acids (e.g. canola, corn, olive, rice bran, safflower, soybean, sunflower) are

recommended in moderation. Since the major sources of saturated fat and total fat in the American diet are meat and high-fat dairy products, and since these foods as well as eggs are the major sources of dietary cholesterol, persons should limit consumption of foods containing butterfat such as whole milk (3.5 percent fat) and even reduced fat (2 percent) milk, butter, cheese, ice cream, cream, and pizza; fatty meats such as regular ground beef (hamburger), processed meats (hot dogs, sausage, bacon), and high-fat luncheon meats (bologna, salami, chopped ham products), as well as poultry skin. Low-saturated-fat substitutes, such as fat-free or 1 percent milk, soft margarine, low-fat cottage cheese, or low-fat or fat-free "ice cream" can be used. Egg yolks should be limited to 2 per week. Organ meats (liver, brain, sweetbreads) are rich sources of cholesterol and should be limited. Of the shellfish, only shrimp is moderately high in cholesterol and inclusion in the diet should be guided by the daily dietary cholesterol allowance. The vegetable oils rich in saturated fat—coconut oil, palm kernel oil, and palm oil—are used in some commercial foods and food products. Choose products that are labeled low saturated fat, e.g., 1 gram of saturated fat per serving, and meats that are labeled as lean.

Although persons need not purchase special foods for implementation of the TLC Diet, many new fat-modified products on the market may facilitate adherence to the TLC Diet.

d) Recommendations by food group

The following information about specific food choices can help persons adopt the TLC Diet.

- Breads, cereals, pasta, whole grains, potatoes, rice, dry peas, and beans (6 or more servings per day). These foods are high in complex carbohydrates and fiber, provide protein, and also are generally low in saturated fat, cholesterol, and total fat. Dry beans and peas are good sources of plant protein and are fiber-rich. They should be substituted for foods high in saturated fat, cholesterol, and total fat. Cereals can be eaten as snacks as well as for breakfast. Dry peas, beans, and legumes can be used in nutritious, tasty, lower fat entrees or accompaniments. Pasta, potatoes, rice, and vegetables can be combined with smaller amounts of lean meat, fish, or poultry for a tasty main dish that can provide less saturated fat and calories.
- Fruits and vegetables (5 or more servings per day). Fruits, vegetables, or both should be emphasized at each meal. They are major sources of vitamins C, E, and A, beta-carotene, other vitamins, fiber, and some minerals, and contribute to achieving the recommended allowances of these nutrients. Snacks and desserts that feature fruits and/or vegetables can be low in saturated fat, total fat, and cholesterol, and very nutritious.
- Fat-free or 1 percent dairy products (2–3 servings per day). Dairy products are important sources of protein, calcium, phosphorus, and vitamin D. Fat-free milk and other fat-free or low-fat dairy products provide as much or more calcium and protein than whole milk dairy products, with little or no saturated fat. Fat-free milk or 1 percent fat milk, fat-free or low-fat cheese (e.g., 3 g per serving), 1 percent fat cottage cheese or imitation cheeses made from vegetable oils, and fat-free or low-fat yogurt are good choices. It should be noted that 2 percent fat dairy products are still rich in saturated fat. Evaporated fat-free milk can be used in recipes calling for heavy cream. Low-fat or fat-free yogurt, 1 percent fat cottage cheese, and fat-free sour cream substitutes can replace sour cream in dips and salad dressings.

- Lean meats (beef, pork, and lamb), poultry, and fish (up to 5 oz per day). Lean cuts of beef include sirloin tip, round steak, rump roast, arm roast and, for pork, center-cut ham, loin chops, and tenderloin. All visible fat should be trimmed before cooking. Ground meat should be extra-lean and drained well after cooking. Meat can be ground at home or a butcher can grind very lean, well trimmed cuts of meat such as those that come from the round. Ground turkey, which can be seasoned and used like ground beef, is very lean if it does not contain turkey skin and fat. Both lean ground meat and ground turkey can be incorporated into soups, stews, and casseroles that contain grain products and vegetables. Special reduced-fat ground meat products (e.g., with carrageenan) may be selected. It is not necessary to eliminate or drastically reduce lean red meat consumption. Lean meat is rich in protein, contains a highly absorbable iron (Fe^{++}), and is a good source of zinc and vitamin B12. Lean meat can contribute to maintenance of iron stores in premenopausal women.
  - Foods containing soy-based meat analogues can be substituted in part for meat products.
  - Processed meats. Processed meats, such as lunch meat, bacon, bologna, salami, sausage, and frankfurters generally have a high content of saturated fat and sodium. Several new processed meat products are lower in saturated fat, total fat, and cholesterol. Read the Nutrition Facts food label to choose foods low in saturated fat, cholesterol, and sodium.
  - Organ meats. Liver, sweetbreads, kidneys, and brain have a high cholesterol content and should be used only occasionally.
  - Chicken and turkey. These are good sources of lean protein. Removing the skin and underlying fat layers substantially reduces the fat content. Chicken and turkey can be substituted for some of the lean red meat in the diet, but they do not contain as much iron. Chicken and other poultry should be prepared in ways that minimize the addition of saturated fat.
  - Fish. Fish are low in saturated fat, some are high in n-3 fatty acids (see Diet Appendix C), and they are a good source of lean protein. The preparation of fish is important. Like chicken and turkey, it should be prepared to limit additional saturated fat.
  - Shellfish. Shellfish are low in saturated fat. The cholesterol content of shellfish is variable (see Diet Appendix C). Shrimp are relatively high in cholesterol, but can be eaten occasionally. About 5 ounces of fish, poultry, or meat per day can be included on the TLC Diet as 2 servings, each serving about the size of a deck of playing cards. A serving of meat in a restaurant often exceeds 5 ounces. (The saturated fat, total fat, and cholesterol content of various cooked meats are presented in Diet Appendix C).
- Fats and oils (including fats and oils used in food preparation). Fats high in saturated fat, *trans* fat, and cholesterol must be limited. This includes lard and meat fat. Some vegetable fats—coconut oil, palm kernel oil, and palm oil—are high in saturated fat and should be avoided; they often are used in bakery goods, processed foods, popcorn oils, and nondairy creamers. The Nutrition Facts food label is a guide for choosing fats and oils lowest in saturated fat. Hydrogenated shortenings and hard margarines are sources of *trans* fat and should be reduced. Vegetable oils and fats high in unsaturated fat do not raise blood cholesterol, but they have a high caloric density. These include canola oil, corn oil, olive oil, safflower oil, soybean oil, and sunflower oil. Margarine contains some *trans* fat but has less cholesterol-raising potential than butter, and thus is preferable to

butter. In general, the softer the margarine, the less LDL-cholesterol-raising potential it has. Hydrogenated shortening contains *trans* fat, resembles hard margarines, and should be limited. Hydrogenated shortenings are found in many commercially prepared baked foods, such as crackers, cookies, doughnuts, and desserts. There are many reduced fat margarines, vegetable oil spreads, and low-fat and fat-free salad dressings on the market. The Nutrition Facts food label provides the amount of fat and saturated fat per serving.

- Nuts. Nuts are high in fat, but in most nuts the predominant fats are unsaturated. The intake of nuts should fit within the calorie and fat goal.
- Eggs. Egg yolks are high in cholesterol (~215 mg/egg) and should be limited to no more than two egg yolks per week. Egg yolks often are found in cooked and processed foods. Egg whites contain no cholesterol, and they can be eaten often. Egg whites or commercial egg substitutes or reduced-cholesterol egg products can replace whole eggs in many recipes.

e) Other eating tips

- Snacks. Some choices for snacks that are low in saturated fat are graham crackers, rye crisp, melba toast, pretzels, low-fat or fat-free crackers, bread sticks, bagels, English muffins, fruit, ready-to-eat cereals, and vegetables; fat-free corn chips and potato chips can be made at home or purchased in some stores. Popcorn should be air popped or cooked in small amounts of vegetable oil. Low-fat cookies include animal crackers, fig and other fruit bars, ginger snaps, and molasses cookies.
- Desserts and sweets. Moderate amounts of sweets and modified-fat desserts (low in saturated fat) may be chosen. For example, fruits, low-fat or fat-free fruit yogurt, fruit ices, sherbet, angel food cake, jello, frozen low-fat or fat-free yogurt, and low-fat ice cream. Cookies, cakes, and pie crusts can be made using unsaturated oil or soft margarines, egg whites or egg substitutes, and fat-free milk. Candies with little or no fat include hard candy, gumdrops, jelly beans, and candy corn. Read the Nutrition Facts food label to choose those products lowest in saturated fat and calories.
- Cooking methods. Methods that use little or no fat include steaming, baking, broiling, grilling, or stir frying in small amounts of fat. Cook foods in the microwave or in a nonstick pan without added fat. Foods may be pan fried with limited fat. Soups and stews should be chilled for a few hours, and the congealed fat removed. Salt should be limited in the preparation of soups, stews, and other dishes. Herbs and spices can often be used instead of salt to help prevent or control high blood pressure.
- Eating away from home. Choose entrees, potatoes, and vegetables prepared without sauces, cheese, or butter when eating away from home. Eat only a small portion of meat. Choose vegetable or fruit salads, with salad dressings on the side. Limit toppings, such as chopped eggs, crumbled bacon, and cheese. Request soft margarine instead of butter, and use it sparingly.

A reference work on food and nutrition may be useful to patients. One available reference is the USDA's Home and Garden Bulletin No. 72, Nutritive Value of Foods 399. In addition, a typical 1-day menu for TLC Diets for both men and women which displays different eating patterns is included in Diet Appendix B.

2) Role of the dietitian in management of the metabolic syndrome

After LDL cholesterol is controlled, medical nutrition therapy turns attention to the metabolic syndrome. Strategies for weight reduction described in the Obesity Education Initiative report (also see www.nhlbi.nih.gov) are helpful. Weight reduction and dietary change introduced in medical nutrition therapy aim to achieve and maintain goals for LDL cholesterol as well as glucose and blood pressure. Hypocaloric diets, increased physical activity, and weight loss usually improve levels of LDL cholesterol, glycemic levels, and blood pressure and have the potential to improve long-term metabolic control. The distribution of calories from total fat and carbohydrate can vary (see Table V.2–2) and can be individualized based on the nutrition assessment and treatment goals.

6. Improving patient adherence to life habit changes

Outpatient studies show that variability in lipoprotein responsiveness to diet is often due to poor compliance. Good compliance is hampered in part by increased consumption of foods prepared away from home. In 1995 about 40 percent of the food budget was spent on food prepared away from home, compared with 25 percent in 1970 (Lin et al., 1999). The consumer has less knowledge of and less control over the nutritional content of food prepared away from home. Moreover, calories, saturated fat, and cholesterol tend to be higher in premade food than food prepared at home (Lin et al., 1999). Food prepared away from home usually does not carry nutrition labeling. Barriers to adherence to dietary therapy must be addressed and reasonable solutions provided. Physicans in general report little confidence in the patients' ability to adhere to dietary change. In one survey, 17 percent of physicians reported that most patients complied, 59 percent reported that some complied, and 22 percent estimated that few patients complied.

Lack of adequate nutrition education in medical schools has been a contributing factor to low adherence to dietary therapy that fortunately is now being addressed. The newly implemented NHLBI-funded Nutrition Academic Award is now underway in 21 U.S. medical schools. This program provides training in nutritional assessment and counseling for medical students and other health professionals in training (Pearson et al., 2001). Other barriers, such as lack of time, lack of adequate referral strategies, lack of third party reimbursement, and competition with pharmacological intervention are also being addressed (Van Horn and Kavey 1997).

Beyond these systemic problems, a validated methodology related to effective nutritional assessment and intervention is lacking. Ready access to a brief dietary assessment tool and accompanying follow up assessments are as yet not standard practice for most physicians. Advances have been made in the past decade regarding the combined use of behavioral strategies along with standardized diet assessment and intervention approaches (Ammerman et. al., 1991; Connor et al., 1992; Gans et al., 1993; Kris-Etherton et al., 2001; Kristal et al., 1990; Retzlaff et al., 1997; Peters et al., 1994)(See Appendix A for an example of a validated assessment tool.)

There is growing evidence from the behavioral therapy literature that strategic approaches to lifestyle intervention can achieve better and more consistent long-term adherence (Glanz et al., 1994, Shepherd et al., 1987, Prochaska et al., 1994). These strategies are based on learning principles that address the need to overcome barriers to adherence with lifestyle change and reinforce newly adopted behaviors (Bandura 1997; Baranowski 1997; Glanz et al., 1994). The

vast majority of these studies appear in the weight management field (Perri 1998). The Obesity Guidelines panel reviewed 36 randomized clinical trial reports to determine potential benefits of behavioral therapy (National Institutes of Health 1998a,b). Key findings from these studies are summarized below:

- Multimodal strategies work better than a single approach
- More frequent contact is associated with better adherence
- Adherence declines with discontinued intervention or follow-up
- Greater intensity of intervention, especially initially, is associated with faster and more sustained adherence
- Motivation is enhanced when the patient sets achievable goals.

Further lessons learned from the behavioral literature emphasize the importance of baseline assessment of dietary intake, use of self-monitoring to improve adherence, and use of health messages that are matched to level of readiness to change, culturally sensitive, interactive, address prior knowledge, come from reliable sources, and recommend reasonable, gradual, and easily implemented change. Additional research is needed with measures of the efficacy and effectiveness of office-based dietary assessment methodology, especially as this relates to behavioral strategies enhancing dietary adherence.

Diet Appendix A

Sample Dietary Assessment Questionaire (Part 1)
MEDFICTS*

In each food category for both Group 1 and Group 2 foods check one box from the "Weekly Consumption" column (number of servings eaten per week) and then check one box from the "Serving Size" column. If you check Rarely/Never, do not check a serving size box. See next page for score.

Food Category	Weekly Consumption				Serving Size			Score
	Rarely/ never	3 or less	4 or more		Small <5 oz/d 1 pt	Average 5 oz/d 2 pts	Large >5 oz/d 3 pts	
Meats • Recommended amount per day: ≤5 oz (equal in size to 2 decks of playing cards) • Base your estimate on the food you consume most often. • Beef and lamb selections are trimmed to 1/8" fat.								
Group 1. 10 gm or more total fat in 3 oz cooked portion **Beef –** Ground beef, Ribs, Steak (T-bone, Flank, Porterhouse, Tenderloin), Chuck blade roast, Brisket, Meatloaf (w/ground beef), Corned beef **Processed meats –** ¼ lb burger or lg. sandwich, Bacon, Lunch meat, Sausage/knockwurst, Hot dogs, Ham (bone-end), Ground turkey **Other meats, Poultry, Seafood—**Pork chops (center loin), Pork roast (Blade, Boston, Sirloin), Pork spareribs, Ground pork, Lamb chops, Lamb (ribs), Organ meats[†], Chicken w/skin, Eel, Mackerel, Pompano	☐	☐ 3 pts	☐ 7pts	x	☐ 1 pt	☐ 2 pts	☐ 3 pts	_____
Group 2. Less than 10 gm total fat in 3 oz cooked portion **Lean beef –** Round steak (Eye of round, Top round), Sirloin[‡], Tip & bottom round[‡], Chuck arm pot roast[‡], Top Loin[‡] **Low-fat processed meats –** Low-fat lunch meat, Canadian bacon, "Lean" fast food sandwich, Boneless ham **Other meats, Poultry, Seafood –** Chicken, Turkey (w/o skin)[§], most Seafood[†], Lamb leg shank, Pork tenderloin, Sirloin top loin, Veal cutlets, Sirloin, Shoulder, Ground veal, Venison, Veal chops and ribs[‡], Lamb (whole leg, loin, fore-shank, sirloin)[‡]	☐	☐	☐		☐	☐	☐[¥] 6 pts	_____
Eggs – Weekly consumption is the number of times you eat eggs each week					Check the number of eggs eaten each time			
Group 1. Whole eggs, Yolks	☐	☐ 3 pts	☐ 7 pts	x	≤1 ☐ 1 pt	2 ☐ 2 pts	≥3 ☐ 3 pts	_____
Group 2. Egg whites, Egg substitutes (½ cup)	☐	☐	☐		☐	☐	☐	_____
Dairy								
Milk – Average serving 1 cup **Group 1.** Whole milk, 2% milk, 2% buttermilk, Yogurt (whole milk)	☐	☐ 3 pts	☐ 7 pts	x	☐ 1 pt	☐ 2 pts	☐ 3 pts	_____
Group 2. Fat-free milk, 1% milk, Fat-free buttermilk, Yogurt (Fat-free, 1% low fat)	☐	☐	☐		☐	☐	☐	_____
Cheese – Average serving 1 oz **Group 1.** Cream cheese, Cheddar, Monterey Jack, Colby, Swiss, American processed, Blue cheese, Regular cottage cheese (½ cup), and Ricotta (¼ cup)	☐	☐ 3 pts	☐ 7 pts	x	☐ 1 pt	☐ 2 pts	☐ 3 pts	_____
Group 2. Low-fat & fat-free cheeses, Fat-free milk mozzarella, String cheese, Low-fat, Fat-free milk & Fat-free cottage cheese (½ cup) and Ricotta (¼ cup)	☐	☐	☐		☐	☐	☐	_____
Frozen Desserts – Average serving ½ cup **Group 1.** Ice cream, Milk shakes	☐	☐ 3 pts	☐ 7 pts	x	☐ 1 pt	☐ 2 pts	☐ 3 pts	_____
Group 2. Low-fat ice cream, Frozen yogurt	☐	☐	☐		☐	☐	☐	_____

FIG (Part 1). MEDFICTS assessment tool.

* MEDFICTS was orginally developed for and printed in ATP II (National Cholesterol Education Program 1993; 1994)

Sample Dietary Assessment Questionaire (Part 2)
MEDFICTS*

Food Category	Weekly Consumption				Serving Size			Score
	Rarely/ never	3 or less	4 or more		Small <5 oz/d 1 pt	Average 5 oz/d 2 pts	Large >5 oz/d 3 pts	
Frying Foods – Average servings: see below. This section refers to method of prepartion for vegetables and meat.								
Group 1. French fries, Fried vegetables (½ cup), Fried chicken, fish, meat (3 oz)	☐	☐ 3 pts	☐ 7 pts	x	☐ 1 pt	☐ 2 pts	☐ 3 pts	_____
Group 2. Vegetables, not deep fried (½ cup), Meat, poultry, or fish—prepared by baking, broiling, grilling, poaching, roasting, stewing: (3 oz)	☐	☐	☐		☐	☐	☐	_____
In Baked Goods – 1 Average serving								
Group 1. Doughnuts, Biscuits, Butter rolls, Muffins, Croissants, Sweet rolls, Danish, Cakes, Pies, Coffee cakes, Cookies	☐	☐ 3 pts	☐ 7 pts	x	☐ 1 pt	☐ 2 pts	☐ 3 pts	_____
Group 2. Fruit bars, Low-fat cookies/cakes/pastries, Angel food cake, Homemade baked goods with vegetable oils, breads, bagels	☐	☐	☐		☐	☐	☐	_____
Convenience Foods								
Group 1. Canned, Packaged, or Frozen dinners: e.g., Pizza (1 slice), Macaroni & cheese (1 cup), Pot pie (1), Cream soups (1 cup), Potato, rice & pasta dishes with cream/cheese sauces (½ cup)	☐	☐ 3 pts	☐ 7 pts	x	☐ 1 pt	☐ 2 pts	☐ 3 pts	_____
Group 2. Diet/Reduced calorie or reduced fat dinners (1), Potato, rice & pasta dishes without cream/cheese sauces (½ cup)	☐	☐	☐		☐	☐	☐	_____
Table Fats – Average serving: 1 Tbsp								
Group 1. Butter, Stick margarine, Regular salad dressing, Mayonnaise, Sour cream (2 Tbsp)	☐	☐ 3 pts	☐ 7 pts	x	☐ 1 pt	☐ 2 pts	☐ 3 pts	_____
Group 2. Diet and tub margarine, Low-fat & fat-free salad dressing, Low-fat & fat-free mayonnaise	☐	☐	☐		☐	☐	☐	_____
Snacks								
Group 1. Chips (potato, corn, taco), Cheese puffs, Snack mix, Nuts (1 oz), Regular crackers (½ oz), Candy (milk chocolate, caramel, coconut) (about 1½ oz), Regular popcorn (3 cups)	☐	☐ 3 pts	☐ 7 pts	x	☐ 1 pt	☐ 2 pts	☐ 3 pts	_____
Group 2. Pretzels, Fat-free chips (1 oz), Low-fat crackers (1/2 oz), Fruit, Fruit rolls, Licorice, Hard candy (1 med piece), Bread sticks (1–2 pcs), Air-popped or low-fat popcorn (3 cups)	☐	☐	☐		☐	☐	☐	_____

† Organ meats, shrimp, abalone, and squid are low in fat but high in cholesterol.

‡ Only lean cuts with all visible fat trimmed. If not trimmed of all visible fat, score as if in Group 1.

¥ Score 6 pts if this box is checked.

§ All parts not listed in group 1 have <10 gm total fat.

Total from page 1 _____

Total from page 2 _____

FINAL SCORE _____

To Score: For each food category, multiply points in weekly consumption box by points in serving size box and record total in score column. If Group 2 foods checked, no points are scored (except for Group 2 meats, large serving = 6 pts).

Example:

☐	☐ 3 pts	☑ 7 pts	x	☐ 1 pt	☐ 2 pts	☑ 3 pts	21

Add score on page 1 and page 2 to get final score.

Key:

≥70 Need to make some dietary changes
40–70 Heart-Healthy Diet
<40 TLC Diet

FIG (part 2). MEDFICTS assessment tool.

* MEDFICTS was orginally developed for and printed in ATP II (National Cholesterol Education Program 1993; 1994)

Diet Appendix B

TLC Sample Menu
Traditional American Cuisine
Male, 25–49 Years

Breakfast

- Oatmeal (1 cup)
  - Fat-free milk (1 cup)
  - Raisins (¼ cup)
- English muffin (1 medium)
  - Soft margarine (2 tsp)
  - Jelly (1 Tbsp)
- Honeydew melon (1 cup)
- Orange juice, calcium fortified (1 cup)
- Coffee (1 cup) with fat-free milk (2 Tbsp)

Lunch

- Roast beef sandwich
  - Whole-wheat bun (1 medium)
  - Roast beef, lean (2 oz)
  - Swiss cheese, low fat (1oz slice)
  - Romaine lettuce (2 leaves)
  - Tomato (2 medium slices)
  - Mustard (2 tsp)
- Pasta salad (1 cup)
  - Pasta noodles (¾ cup)
  - Mixed vegetables (¼ cup)
  - Olive oil (2 tsp)
- Apple (1 medium)
- Iced tea, unsweetened (1 cup)

Dinner

- Orange roughy (3 oz) cooked with olive oil (2 tsp)
  - Parmesan cheese (1 Tbsp)
- Rice (1½ cup) → *For a higher fat alternative, substitute 1/3 cup of unsalted peanuts, chopped (to sprinkle on the frozen yogurt) for 1 cup of the rice.
- Corn kernels (½ cup)
  - Soft margarine (1 tsp)
- Broccoli (½ cup)
  - Soft margarine (1 tsp)
- Roll (1 small)
  - Soft margarine (1 tsp)
- Strawberries (1 cup) topped with low-fat frozen yogurt (½ cup)
- Fat-free milk (1 cup)

Snack

- Popcorn (2 cups) cooked with canola oil (1 Tbsp)
- Peaches, canned in water (1 cup)
- Water (1 cup)

Nutrient Analysis

Calories	2523
Cholesterol (mg)	139
Fiber (g)	32
Soluble (g)	10
Sodium (mg)	1800
Carbohydrates, % calories	57

Total fat, % calories	28
Saturated fat, % calories	6
Monounsaturated fat, % calories	14
Polyunsaturated fat, % calories	6
Trans fat (g)	5
Omega 3 fat (g)	0.4
Protein, % calories	17

***Higher Fat Alternative**

Total fat, % calories	34

No salt is added in recipe preparation or as seasoning.
The sample menu meets or exceeds the Daily Reference Intake (DRI) for nutrients.

TLC Sample Menu
Traditional American Cuisine
Female, 25–49 Years

Breakfast

- Oatmeal (1 cup)
  - Fat-free milk (1 cup)
  - Raisins (¼ cup)
- Honeydew melon (1 cup)
- Orange juice, calcium fortified (1 cup)
- Coffee (1 cup) with fat-free milk (2 Tbsp)

Lunch

- Roast beef sandwich
  - Whole-wheat bun (1 medium)
  - Roast beef, lean (2 oz)
  - Swiss cheese, low fat (1 oz slice)
  - Romaine lettuce (2 leaves)
  - Tomato (2 medium slices)
  - Mustard (2 tsp)
- Pasta salad (½ cup)
  - Pasta noodles (¼ cup)
  - Mixed vegetables (¼ cup)
  - Olive oil (1 tsp)
- Apple (1 medium)
- Iced tea, unsweetened (1 cup)

Dinner

- Orange roughy (2 oz) cooked with olive oil (2 tsp)
  - Parmesan cheese (1 Tbsp)
- Rice (1 cup) → *For a higher fat alternative, substitute 2 Tbsp of unsalted peanuts, chopped (to sprinkle on the frozen yogurt) for ½ cup of the rice.
  - Soft margarine (1 tsp)
- Broccoli (½ cup)
  - Soft margarine (1 tsp)
- Strawberries (1 cup) topped with low-fat frozen yogurt (½ cup)
- Water (1 cup)

Snack

- Popcorn (2 cups) cooked with canola oil (1 Tbsp)
- Peaches, canned in water (1 cup)
- Water (1 cup)

Nutrient Analysis

Calories	1795
Cholesterol (mg)	115
Fiber (g)	28
Soluble (g)	9
Sodium (mg)	1128
Carbohydrates, % calories	57

Total fat, % calories	27
Saturated fat, % calories	6
Monounsaturated fat, % calories	14
Polyunsaturated fat, % calories	6
Trans fat (g)	2
Omega 3 fat (g)	0.4
Protein, % calories	19

***Higher Fat Alternative**

Total fat, % calories	33

No salt is added in recipe preparation or as seasoning.
The sample menu meets or exceeds the Daily Reference Intake (DRI) for nutrients.

TLC Sample Menu
Lacto Ovo Vegetarian Cuisine
Male, 25–49 Years

Breakfast

- Egg white omelet, cooked with canola oil (2 tsp)
  - Liquid egg substitute (½ cup)
  - Tomato, chopped (1 medium slice)
  - Mushrooms, chopped (2 medium)
  - Green pepper, chopped (¼ cup)
  - Cheddar cheese, low fat, grated (2 Tbsp)
- English muffin (1 whole)
  - Jelly (1 Tbsp)
- Honeydew melon (½ cup)
- Orange juice, calcium fortified (1 cup)
- Coffee (1 cup) with fat-free milk (2 Tbsp)

Lunch

- Vegetable sandwich
  - Onion roll (1 medium)
  - Tomato (2 medium slices)
  - Avocado slices, dark skin, California type (1/3 of small fruit)
  - Romaine lettuce (2 leaves)
  - Carrots, grated (½ cup)
  - Cheddar cheese, low fat (1 slice, 1 oz)
  - Mustard (1 Tbsp)
- Salad
  - Romaine lettuce (2 cups)
  - Kidney beans (¾ cup) → *For a higher fat alternative, substitute ⅓ cup of unsalted almond slices for ½ cup of the kidney beans in the salad.
  - Tomato, cherry (½ cup)
  - Cucumber (1/3 cup)
  - Carrots, shredded (1/3 cup)
  - Dressing, homemade vinegar and olive oil (2 Tbsp)
- Fat-free milk (1 cup)

Dinner

- Pasta and Vegetables
  - Spaghetti, cooked (2 cups), with olive oil (1Tbsp)
  - Broccoli (1 cup)
  - Marinara sauce, low sodium (¾ cup)
  - Parmesan cheese (1½ Tbsp)
- Angel food cake (2x3 inch piece)
  - Frozen yogurt (¼ cup)
  - Chocolate sauce (1 Tbsp)
- Iced tea, unsweetened (1 cup)

Snack

- Bagel (½ medium)
  - Peanut butter, reduced fat, unsalted (½ Tbsp)
- Apple (1 medium)
- Water (1 cup)

Nutrient Analysis

Calories	2499
Cholesterol (mg)	24
Fiber (g)	44
Soluble (g)	17
Sodium (mg)	2282
Carbohydrates, % calories	60

Total fat, % calories	29
Saturated fat, % calories	5
Monounsaturated fat, % calories	16
Polyunsaturated fat, % calories	5
Trans fat (g)	0.4
Protein, % calories	15

***Higher Fat Alternative**

Total fat, % calories	33

No salt is added in recipe preparation or as seasoning.
The sample menu meets or exceeds the Daily Reference Intake (DRI) for nutrients.

TLC Sample Menu
Lacto Ovo Vegetarian Cuisine
Female, 25–49 Years

Breakfast

- Egg white omelet, cooked with canola oil (2 tsp)
  - Liquid egg substitute (½ cup)
  - Tomato, chopped (1 medium slice)
  - Mushrooms, chopped (2 medium)
  - Green pepper, chopped (¼ cup)
  - Cheddar cheese, low fat, grated (2 Tbsp)
- Whole-wheat toast (1 slice)
  - Jelly (2 tsp)
- Honeydew melon (½ cup)
- Coffee (1 cup) with fat-free milk (2 Tbsp)

Lunch

- Vegetable Sandwich
  - Onion roll (1 medium)
  - Tomato (2 medium slices)
  - Romaine lettuce (2 leaves)
  - Carrots, grated (½ cup)
  - Cheddar cheese, low fat (1 slice, 1 oz)
  - Mustard (1 Tbsp)
- Salad
- Romaine lettuce (2 cups) → *For a higher fat alternative, substitute ¼ cup of unsalted almond slices for all of the kidney beans in the salad.
- Kidney beans (½ cup)
  - Tomato, cherry (½ cup)
  - Cucumber (1/3 cup)
  - Carrots, shredded (1/3 cup)
  - Dressing, homemade—vinegar and olive oil (2 Tbsp)
- Fat-free milk (1 cup)

Dinner

- Pasta and Vegetables
  - Spaghetti, cooked (1 cup), with olive oil (½ Tbsp)
  - Broccoli (1 cup)
  - Marinara sauce, low sodium (½ cup)
  - Parmesan cheese (1 Tbsp)
- Angel food cake (2x3 inch piece)
  - Frozen yogurt (¼ cup)
  - Chocolate sauce (1 Tbsp)
- Iced tea, unsweetened

Snack

- Bagel (½ medium)
  - Peanut butter, reduced fat, unsalted (½ Tbsp)
- Water (1 cup)

Nutrient Analysis

Calories	1812
Cholesterol (mg)	26
Fiber (g)	30
Soluble (g)	12
Sodium (mg)	2205
Carbohydrates, % calories	58

Total fat, % calories	27
Saturated fat, % calories	5
Monounsaturated fat, % calories	15
Polyunsaturated fat, % calories	4
Trans fat (g)	1
Protein, % calories	18

***Higher Fat Alternative**

Total fat, % calories	33

No salt is added in recipe preparation or as seasoning.
The sample menu meets or exceeds the Daily Reference Intake (DRI) for nutrients.

TLC Sample Menu
Southern Cuisine
Male, 25–49 Years

Breakfast

- Bran cereal (¾ cup)
  - Banana (1 medium)
  - Fat-free milk (1 cup)
- Biscuit, made with canola oil (1 medium)
  - Jelly (1 Tbsp)
  - Soft margarine (2 tsp)
- Honeydew melon (1 cup)
- Orange juice, calcium fortified (1 cup)
- Coffee (1 cup) with fat-free milk (2 Tbsp)

Lunch

- Chicken breast (3 oz), sautéed with canola oil (2 tsp)
- Collard greens (½ cup)
  - Chicken broth, low sodium (1 Tbsp)
- Black-eyed peas (½ cup)
- Corn on the cob (1 medium) → *For a higher fat alternative, substitute ¼ cup of unsalted almond slices for the corn on the cob. Sprinkle the almonds on the rice.
  - Soft margarine (1tsp)
- Rice, cooked (1 cup)
  - Soft margarine (1 tsp)
- Fruit cocktail, canned in water (1 cup)
- Iced tea, unsweetened (1 cup)

Dinner

- Catfish (3 oz) coated with flour and baked with canola oil (½ Tbsp)
- Sweet potato (1 medium)
  - Soft margarine (2 tsp)
- Spinach (½ cup)
  - Vegetable broth, low sodium (2 Tbsp)
- Corn muffin (1 medium), made with fat-free milk and egg substitute
  - Soft margarine (1 tsp)
- Watermelon (1 cup)
- Iced tea, unsweetened (1 cup)

Snack

- Bagel (1 medium)
- Peanut butter, reduced fat, unsalted (1 Tbsp)
- Fat-free milk (1 cup)

Nutrient Analysis

Calories	2504
Cholesterol (mg)	158
Fiber (g)	52
Soluble (g)	10
Sodium (mg)	2146
Carbohydrates, % calories	59

Total fat, % calories	30
Saturated fat, % calories	5
Monounsaturated fat, % calories	13
Polyunsaturated fat, % calories	9
Trans fat (g)	6
Protein, % calories	18

***Higher Fat Alternative**

Total fat, % calories	34

No salt is added in recipe preparation or as seasoning.
The sample menu meets or exceeds the Daily Reference Intake (DRI) for nutrients.

TLC Sample Menu
Southern Cuisine
Female, 25–49 Years

Breakfast

- Bran cereal (¾ cup)
  - Banana (1 medium)
  - Fat-free milk (1 cup)
- Biscuit, low sodium and made with canola oil (1 medium)
  - Jelly (1 Tbsp)
  - Soft margarine (1 tsp)
- Honeydew melon (½ cup)
- Coffee (1 cup) with fat-free milk (2 Tbsp)

Lunch

- Chicken breast (2 oz) cooked with canola oil (2 tsp)
- Corn on the cob (1 medium) → *For a higher fat alternative, substitute ¼ cup of unsalted almond slices for the corn on the cob. Sprinkle the almonds on the rice.
  - Soft margarine (1tsp)
- Collards greens (½ cup)
  - Chicken broth, low sodium (1 Tbsp)
- Rice, cooked (½ cup)
- Fruit cocktail, canned in water (1cup)
- Iced tea, unsweetened (1 cup)

Dinner

- Catfish (3 oz), coated with flour and baked with canola oil (½ Tbsp)
- Sweet potato (1 medium)
  - Soft margarine (2 tsp)
- Spinach (½ cup)
  - Vegetable broth, low sodium (2 Tbsp)
- Corn muffin (1 medium), made with fat-free milk and egg substitute
  - Soft margarine (1 tsp)
- Watermelon (1 cup)
- Iced tea, unsweetened (1 cup)

Snack

- Graham crackers (4 large)
- Peanut butter, reduced fat, unsalted (1 Tbsp)
- Fat-free milk (½ cup)

Nutrient Analysis

Calories	1823
Cholesterol (mg)	131
Fiber (g)	43
Soluble (g)	8
Sodium (mg)	1676
Carbohydrates, % calories	59

Total fat, % calories	30
Saturated fat, % calories	5
Monounsaturated fat, % calories	14
Polyunsaturated fat, % calories	8
Trans fat (g)	3
Omega 3 fat (g)	0.4
Protein, % calories	18

***Higher Fat Alternative**

Total fat, % calories	35

No salt is added in recipe preparation or as seasoning.
The sample menu meets or exceeds the Daily Reference Intake (DRI) for nutrients.

TLC Sample Menu
Asian Cuisine
Male, 25–49 Years

Breakfast

- Scrambled egg whites (¾ cup liquid egg substitute)
  - Cooked with fat-free cooking spray → *For a higher fat alternative, cook egg whites with 1 Tbsp of canola oil.
- English muffin (1 whole)
  - Soft margarine (2 tsp)
  - Jam (1 Tbsp)
- Strawberries (1 cup)
- Orange Juice, calcium fortified (1 cup) → **If using higher fat alternative, eliminate orange juice.
- Coffee (1 cup) with fat-free milk (2 Tbsp)

Lunch

- Tofu Vegetable stir-fry
  - Tofu (3 oz)
  - Mushrooms (½ cup)
  - Onion (¼ cup)
  - Carrots (½ cup)
  - Swiss chard (1 cup)
  - Garlic, minced (2 Tbsp)
  - Peanut oil (1 Tbsp)
  - Soy sauce, low sodium (2½ tsp)
- Rice, cooked (1 cup)
- Vegetable egg roll, baked (1 medium)
- Orange (1 medium)
- Green Tea (1 cup)

Dinner

- Beef stir-fry
  - Beef tenderloin (3 oz)
  - Soybeans, cooked (¼ cup)
  - Broccoli, cut in large pieces (½ cup)
  - Carrots, sliced (½ cup)
  - Peanut oil (1 Tbsp)
  - Soy sauce, low sodium (2 tsp)
- Rice, cooked (1 cup)
- Watermelon (1 cup)
- Almond cookies (2 cookies)
- Fat-free milk (1 cup)

Snack

- Chinese noodles, soft (1 cup)
  - Peanut oil (2 tsp)
- Banana (1 medium)
- Green tea (1 cup)

Nutrient Analysis

Calories	2519
Cholesterol (mg)	108
Fiber (g)	37
Soluble (g)	15
Sodium (mg)	2268
Carbohydrates, % calories	57

Total fat, % calories	28
Saturated fat, % calories	5
Monounsaturated fat, % calories	11
Polyunsaturated fat, % calories	9
Trans fat (g)	3
Protein, % calories	18

***Higher Fat Alternative**

Total fat, % calories	32

No salt is added in recipe preparation or as seasoning.
The sample menu meets or exceeds the Daily Reference Intake (DRI) for nutrients.

**Because canola oil adds extra calories, the orange juice is left out of the menu.

TLC Sample Menu
Asian Cuisine
Female, 25–49 Years

Breakfast

- Scrambled egg whites (½ cup liquid egg substitute)
  - Cooked with fat-free cooking spray → *For a higher fat alternative, cook egg whites with 1 Tbsp of canola oil.
- English muffin (1 whole)
  - Soft margarine (2 tsp)
  - Jam (1 Tbsp)
- Strawberries (1 cup)
- Orange Juice, calcium fortified (1 cup) → **If using higher fat alternative, eliminate orange juice.
- Coffee (1 cup) with fat-free milk (2 Tbsp)

Lunch

- Tofu Vegetable stir-fry
  - Tofu (3 oz)
  - Mushrooms (½ cup)
  - Onion (¼ cup)
  - Carrots (½ cup)
  - Swiss chard (½ cup)
  - Garlic, minced (2 Tbsp)
  - Peanut oil (1 Tbsp)
  - Soy sauce, low sodium (2½ tsp)
- Rice, cooked (½ cup)
- Orange (1 medium)
- Green tea (1 cup)

Dinner

- Beef stir-fry
  - Beef tenderloin (3 oz)
  - Soybeans, cooked (¼ cup)
  - Broccoli, cut in large pieces (½ cup)
  - Peanut oil (1 Tbsp)
  - Soy sauce, low sodium (2 tsp)
- Rice, cooked (½ cup)
- Watermelon (1 cup)
- Almond cookie (1 cookie)
- Fat-free milk (1 cup)

Snack

- Chinese noodles, soft (½ cup)
  - Peanut oil (1 tsp)
- Green tea (1 cup)

Nutrient Analysis

Calories	1829
Cholesterol (mg)	74
Fiber (g)	26
Soluble (g)	10
Sodium (mg)	1766
Carbohydrates, % calories	56

Total fat, % calories	28
Saturated fat, % calories	6
Monounsaturated fat, % calories	11
Polyunsaturated fat, % calories	9
Trans fat (g)	3
Protein, % calories	18

***Higher Fat Alternative**

Total fat, % calories	33

No salt is added in recipe preparation or as seasoning.
The sample menu meets or exceeds the Daily Reference Intake (DRI) for nutrients.

**Because canola oil adds extra calories, the orange juice is left out of the menu.

TLC Sample Menu
Mexican-American Cuisine
Male, 25–49 Years

Breakfast

- Bean Tortilla
  - Corn tortilla (2 medium)
  - Pinto beans (½ cup) → *For a higher fat alternative, cook beans with canola oil (1 Tbsp).
  - Onion (¼ cup), tomato, chopped (¼ cup)
  - Jalapeno pepper (1 medium)
  - Sauté with canola oil (1 tsp)
- Papaya (1 medium) → **If using higher fat alternative, reduce papaya serving to ½ medium fruit.
- Orange Juice, calcium fortified (1 cup)
- Coffee (1 cup) with fat-free milk (2 Tbsp)

Lunch

- Stir-fried beef
  - Sirloin steak (3 oz)
  - Garlic, minced (1 tsp)
  - Onion, chopped (¼ cup)
  - Tomato, chopped (¼ cup)
  - Potato, diced (¼ cup)
  - Salsa (¼ cup)
  - Olive oil (2 tsp)
- Mexican rice
  - Rice, cooked (1 cup)
  - Onion, chopped (¼ cup)
  - Tomato, chopped (¼ cup)
  - Jalapeno pepper (1 medium)
  - Carrots, diced (¼ cup)
  - Cilantro (2 Tbsp)
  - Olive oil (1 Tbsp)
- Mango (1 medium)
- Blended fruit drink (1 cup)
  - Fat-free milk (1 cup)
  - Mango, diced (¼ cup)
  - Banana, sliced (¼ cup)
  - Water (¼ cup)

Dinner

- Chicken fajita
  - Corn tortilla (2 medium)
  - Chicken breast, baked (3 oz)
  - Onion, chopped (2 Tbsp)
  - Green pepper, chopped (¼ cup)
  - Garlic, minced (1 tsp)
  - Salsa (2 Tbsp)
  - Canola oil (2 tsp)
- Avocado salad
  - Romaine lettuce (1 cup)
  - Avocado slices, dark skin, California type (1 small)
  - Tomato, sliced (¼ cup)
  - Onion, chopped (2 Tbsp)
  - Sour cream, low fat (1½ Tbsp)
- Rice pudding with raisins (¾ cup)
- Water (1 cup)

Snack

- Plain yogurt, fat free, no sugar added (1 cup)
  - Mixed with peaches, canned in water (½ cup)
- Water (1 cup)

Nutrient Analysis

Calories	2535
Cholesterol (mg)	158
Fiber (g)	48
Soluble (g)	17
Sodium (mg)	2118
Carbohydrates, % calories	58

Total fat, % calories	28
Saturated fat, % calories	5
Monounsaturated fat, % calories	17
Polyunsaturated fat, % calories	5
Trans fat (g)	<1
Protein, % calories	17

***Higher Fat Alternative**

Total fat, % calories	33

No salt is added in recipe preparation or as seasoning.
The sample menu meets or exceeds the Daily Reference Intake (DRI) for nutrients.

**Because the peanuts add extra calories, the papaya serving is reduced in the menu.

TLC Sample Menu
Mexican-American Cuisine
Female, 25–49 Years

Breakfast

- Bean Tortilla
  - Corn tortilla (1 medium)
  - Pinto beans (¼ cup)
  - Onion (2 Tbsp), tomato, chopped (2 Tbsp), jalapeno pepper (1 medium)
  - Sauté with canola oil (1 tsp)
- Papaya (1 medium) → **If using higher fat alternative, eliminate papaya.
- Orange juice, calcium fortified (1 cup)
- Coffee (1 cup) with fat-free milk (2 Tbsp)

Lunch

- Stir-Fried Beef
  - Sirloin steak (2 oz)
  - Garlic, minced (1 tsp)
  - Onion, chopped (¼ cup)
  - Tomato, chopped (¼ cup)
  - Potato, diced (¼ cup) → *For a higher fat alternative, substitute ½ cup of unsalted peanut halves for the potatoes.
  - Salsa (¼ cup)
  - Olive oil (1½ tsp)
- Mexican rice (½ cup)
  - Rice, cooked (½ cup)
  - Onion, chopped (2 Tbsp)
  - Tomato, chopped (2 Tbsp)
  - Jalapeno pepper (1 medium)
  - Carrots, diced (2 Tbsp)
  - Cilantro (1 Tbsp)
  - Olive oil (2 tsp)
- Mango (1 medium)
  - Blended fruit drink (1 cup)
  - Fat-free milk (1 cup)
  - Mango, diced (¼ cup)
  - Banana, sliced (¼ cup)
  - Water (¼ cup)

Dinner

- Chicken fajita
  - Corn tortilla (1 medium)
  - Chicken breast, baked (2 oz)
  - Onion, chopped (2 Tbsp)
  - Green pepper, chopped (2 Tbsp)
  - Garlic, minced (1 tsp)
  - Salsa (1½ Tbsp)
  - Canola oil (1 tsp)
- Avocado salad
  - Romaine lettuce (1 cup)
  - Avocado slices, dark skin, California type (½ small)
  - Tomato, sliced (¼ cup)
  - Onion, chopped (2 Tbsp)
  - Sour cream, low fat (1½ Tbsp)
- Rice pudding with raisins (½ cup)
- Water (1 cup)

Snack

- Plain yogurt, fat free, no sugar added (1 cup)
  - Mixed with peaches, canned in water (½ cup)
- Water (1 cup)

Nutrient Analysis

Calories	1821
Cholesterol (mg)	110
Fiber (g)	35
Soluble (g)	13
Sodium (mg)	1739
Carbohydrates, % calories	61

Total fat, % calories	26
Saturated fat, % calories	4
Monounsaturated fat, % calories	15
Polyunsaturated fat, % calories	4
Trans fat (g)	<1
Protein, % calories	17

***Higher Fat Alternative**

Total fat, % calories	34

No salt is added in recipe preparation or as seasoning.
The sample menu meets or exceeds the Daily Reference Intake (DRI) for nutrients

**Because the peanuts add extra calories, the papaya is left out of the menu.

Diet Appendix C

Saturated Fat, Total Fat, Cholesterol, and Omega-3 Content of Meat, Fish, and Poultry in 3-Ounce Portions Cooked Without Added Fat

Source	Saturated Fat g/3 oz	Total Fat g/3 oz	Cholesterol mg/3 oz	Omega-3 g/3 oz
Lean Red Meats				
Beef (rump roast, shank, bottom round, sirloin)	1.4	4.2	71	–
Lamb (shank roast, sirloin roast, shoulder roast, loin chops, sirloin chops, center leg chop)	2.8	7.8	78	–
Pork (sirloin cutlet, loin roast, sirloin roast, center roast, butterfly chops, loin chops)	3.0	8.6	71	–
Veal (blade roast, sirloin chops, shoulder roast, loin chops, rump roast, shank)	2.0	4.9	93	–
Organ Meats				
Liver				
Beef	1.6	4.2	331	–
Calf	2.2	5.9	477	–
Chicken	1.6	4.6	537	–
Sweetbread	7.3	21.3	250	–
Kidney	0.9	2.9	329	–
Brains	2.5	10.7	1,747	–
Heart	1.4	4.8	164	–
Poultry				
Chicken (without skin)				
Light (roasted)	1.1	3.8	72	–
Dark (roasted)	2.3	8.3	71	–
Turkey (without skin)				
Light (roasted)	0.9	2.7	59	–
Dark (roasted)	2.0	6.1	72	–
Fish				
Haddock	0.1	0.8	63	0.22
Flounder	0.3	1.3	58	0.47
Salmon	1.7	7.0	54	1.88
Tuna, light, canned in water	0.2	0.7	25	0.24
Shellfish				
Crustaceans				
Lobster	0.1	0.5	61	0.07
Crab meat				
Alaskan King Crab	0.1	1.3	45	0.38
Blue Crab	0.2	1.5	85	0.45
Shrimp	0.2	0.9	166	0.28
Mollusks				
Abalone	0.3	1.3	144	0.15
Clams	0.2	1.7	57	0.33
Mussels	0.7	3.8	48	0.70
Oysters	1.3	4.2	93	1.06
Scallops	0.1	1.2	56	0.36
Squid	0.6	2.4	400	0.84

VI. Drug Therapy

1. Thresholds and goals for drug treatment

a. Drug therapy to achieve treatment goals: overview

LDL cholesterol is the primary target of treatment in clinical lipid management. The use of therapeutic lifestyle changes (TLC), including LDL-lowering dietary options (plant stanols/sterols and increased viscous fiber) will achieve the therapeutic goal in many persons. Nonetheless, a portion of the population whose short-term and/or long-term risk for CHD, will require LDL-lowering drugs to reach the prescribed goal for LDL cholesterol. The availability of HMG CoA reductase inhibitors (statins) allows attainment of the LDL goal in most higher risk persons. Other agents—bile acid sequestrants, nicotinic acid, and some fibrates—also can moderately lower LDL levels.

If TLC alone fails to achieve the goal for LDL cholesterol, consideration can be given to adding drug therapy. In such cases, the third visit of dietary therapy (Figure V.2–1) will be the visit to initiate drug treatment. When drugs are used, however, TLC also should always be used concomitantly. Dietary therapy provides additional CHD risk reduction beyond drug efficacy. Suggestions for combined use of TLC and drug therapy are given in Table VI.1–1.

The general scheme for initiation and progression of LDL-lowering drug therapy is outlined in Figure VI.l–l. As with dietary therapy, the first priority of drug therapy is to achieve the goal for LDL cholesterol. For this reason an LDL-lowering drug should be started. The usual drug will be a statin, but alternatives are a bile acid sequestrant or nicotinic acid. The starting dose of statin will depend on the baseline LDL-cholesterol level. In persons with only moderate elevations of LDL cholesterol, the LDL-cholesterol goal will be achieved with low or standard doses, and higher doses will not be necessary. The response to drug therapy should be checked in about 6 weeks. If the treatment goal has been achieved, the current dose can be maintained; if not, LDL-lowering therapy can be intensified, either by increasing the statin dose or by combining a statin with a bile acid sequestrant.

Although LDL cholesterol is the primary target of therapy, other lipid risk factors besides elevated LDL affect CHD risk. Among these are low HDL cholesterol, elevated triglyceride (especially VLDL remnants), and possibly small LDL particles. This "lipid triad" has been called *atherogenic dyslipidemia.* It commonly occurs as one component of the metabolic syndrome. Weight reduction and increased physical activity constitute first-line therapy for atherogenic dyslipidemia, and three classes of drugs—statins, nicotinic acid, and fibrates—favorably modify the lipid abnormalities of atherogenic dyslipidemia. Many persons with atherogenic dyslipidemia have high triglycerides ($\geq$200 mg/dL). Such persons usually have an increase in atherogenic VLDL remnants, which can be estimated clinically by measuring VLDL cholesterol. In persons with high triglycerides, the combination of LDL cholesterol + VLDL cholesterol (non-HDL cholesterol) represents *atherogenic cholesterol*. Non-HDL cholesterol thus represents a secondary target of therapy (after LDL cholesterol) when triglycerides are elevated. Statins alone will be sufficient to attain the non-HDL-cholesterol goal in some persons, but a combination of statins and nicotinic acid (or fibrates) can be helpful in others.

Table VI.1–1. Suggestions for Combined Use of TLC and Drug Therapy

• Intensive LDL lowering with TLC, including therapeutic dietary options (plant stanols/sterols and/or increased viscous fiber) – May obviate need for drug therapy – Can augment LDL-lowering drug therapy – May allow for lower doses of drugs
• Weight control plus increased physical activity – Reduces risk beyond LDL-cholesterol lowering – Constitutes primary management of the metabolic syndrome – Raises HDL-cholesterol levels – Enhances reduction of non-HDL cholesterol
• Initiating TLC before drug consideration – For most persons, a trial of dietary therapy of about 3 months is advised before initiating drug therapy – Unsuccessful trials of dietary therapy without drugs should not be prolonged indefinitely if goals of therapy are not approached in a reasonable period; drug therapy should not be withheld if it is needed to reach targets in persons with a short-term and/or long-term CHD risk that is high.
• Initiating drug therapy simultaneously with TLC – For severe hypercholesterolemia in which dietary therapy alone cannot achieve LDL targets – For those with CHD or CHD risk equivalents in whom dietary therapy alone will not achieve LDL targets

The general strategy for initiation and progression of drug therapy is outlined in Figure VI.1–1. Consideration of drug therapy often occurs simultaneously with the decision to initiate TLC therapy for the metabolic syndrome (Figure V.2–1). Thus weight reduction and increased physical activity may begin at the same time as drug treatment.

Figure VI.1–1. Progression of Drug Therapy

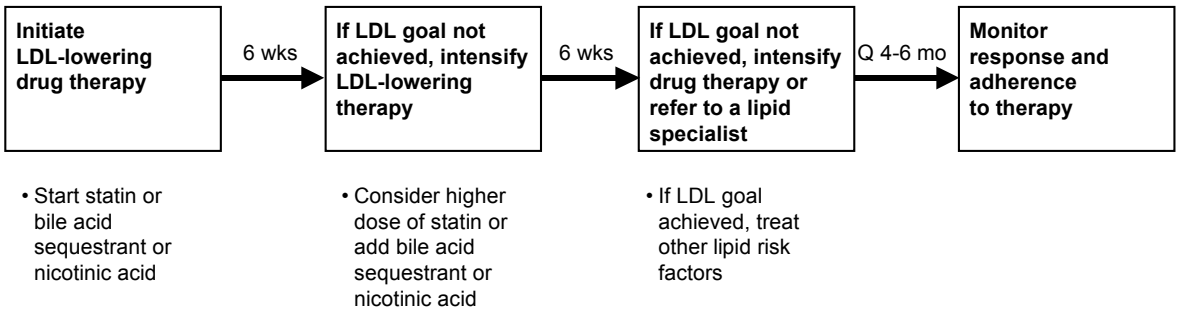

After another 6 weeks, the response to therapy should be assessed. If the LDL-cholesterol goal is still not achieved, further intensification of therapy should be considered, with re-evaluation in another 6 weeks. Once the LDL-cholesterol goal has been attained, attention turns to other lipid risk factors when present. If triglycerides are high (≥200 mg/dL), the secondary target of

treatment becomes non-HDL cholesterol. If the LDL-cholesterol goal has been attained but not the non-HDL-cholesterol goal, there are two alternative approaches: (a) the dose of the LDL-lowering drug can be increased to reduce both LDL and VLDL, or (b) consideration can be given to adding a triglyceride-lowering drug (fibrate or nicotinic acid) to LDL-lowering therapy, which will mainly lower VLDL (see Section VII). The latter approach has the advantage of raising HDL cholesterol in addition to lowering non-HDL cholesterol. Thereafter, persons can be monitored for response to therapy every 4 or 6 months, or more often if considered necessary.

Some cholesterol-lowering agents are currently available over-the-counter (OTC) (e.g., nicotinic acid), and manufacturers of several classes of LDL-lowering drugs (e.g., statins, bile acid sequestrants) have applied to the Food and Drug Administration (FDA) to allow these agents to become OTC medications. At the time of publication of ATP III, the FDA has not granted permission for OTC status for statins or bile acid sequestrants. If an OTC cholesterol-lowering drug is or becomes available, patients should continue to consult with their physicians about whether to initiate drug treatment, about setting goals of therapy, and about monitoring for therapeutic responses and side effects.

b. Cholesterol management in persons with CHD or CHD risk equivalents

The general approach to drug therapy in persons with CHD or CHD risk equivalents is shown in Figure IV.2–1. The LDL-cholesterol goal is <100 mg/dL. Most persons with CHD or CHD risk equivalents should be treated to achieve this goal. Special considerations for LDL-lowering therapy with drugs are given for the following subcategories of persons with CHD or CHD risk equivalents.

1) Baseline LDL cholesterol ≥130 mg/dL

Secondary prevention trials consistently show benefit from LDL-lowering drugs when baseline LDL cholesterol is ≥130 mg/dL. Thus, most persons with baseline LDL cholesterol ≥130 mg/dL should be started on LDL-lowering drugs simultaneously with TLC since many such persons cannot achieve the LDL-cholesterol goal of <100 mg/dL on dietary therapy alone. Nonetheless, the use of dietary therapy is essential because it provides benefits not available through drugs. In some persons, to achieve the LDL goal, relatively high doses of LDL-lowering drugs will be required. Statins typically are the drug of first choice. In persons whose baseline LDL cholesterol is very high, drugs in combination (e.g., statins + bile acid sequestrants) will be necessary to reduce the LDL cholesterol to <100 mg/dL.

2) On-treatment LDL cholesterol 100–129 mg/dL

If the LDL-cholesterol level is reduced to <100 mg/dL, current drug therapy can be continued. However, even in controlled clinical trials, less than half of persons with CHD achieved an LDL-cholesterol goal of <100 mg/dL on standard doses of statins (i.e., simvastatin 20–40 mg/day in the 4S trial or pravastatin 40 mg/day in CARE and LIPID). In the majority of participants, on-treatment LDL cholesterol was in the range of 100–129 mg/dL. For such persons, several therapeutic options are available (Table VI.1–2).

Table VI.1–2. Therapeutic Options for Clinical Management of Persons with On-Treatment LDL-Cholesterol Levels of 100–129 mg/dL

#1	• Increase intensity of TLC for LDL lowering to achieve LDL-cholesterol goal <100 mg/dL – Reinforce reduction of saturated fats and cholesterol – Add other dietary therapies ▸ Plant stanols/sterols ▸ Increase viscous fiber – Promote weight loss in overweight/obese persons
#2	• Intensify LDL-lowering drug therapy to achieve LDL-cholesterol goal <100 mg/dL – Increase dose of statin – Add a second LDL-lowering drug (bile acid sequestrant or nicotinic acid)
#3	• Introduce lifestyle therapies for treatment of the metabolic syndrome, if present – Promote weight loss in overweight/obese persons – Recommend increased physical activity
#4	• Employ drug therapy for treatment of atherogenic dyslipidemia, if present – Nicotinic acid – Fibric acids
#5	• Intensify treatment of nonlipid risk factors – Hypertension – Hyperglycemia – Prothrombotic state (antiplatelet drugs/anticoagulants)

First, dietary options for LDL lowering can be intensified. These include reinforcement of lifestyle therapies (reduced intakes of saturated fat and cholesterol and weight reduction); referral to a dietitian for medical nutrition therapy is advisable. These changes in eating habits, combined with other dietary therapies (plant stanols/sterols and increased viscous fiber), often will reduce LDL-cholesterol levels to near 100 mg/dL. *Second,* LDL-lowering drug therapy can be intensified. The dose of statins can be increased, or a second LDL-lowering drug (bile acid sequestrant or nicotinic acid) can be combined with statin therapy. *Third,* if the patient has the metabolic syndrome, attention can turn to managing this condition through weight loss and increased physical activity; besides improvement of lipid and nonlipid risk factors of this syndrome, further LDL lowering often is obtained. *Fourth,* if the patient has atherogenic dyslipidemia, other drugs (nicotinic acid or fibric acids) can be added to the regimen, or LDL-lowering therapy can be intensified. Nicotinic acid not only will improve atherogenic dyslipidemia, but it also can lower LDL-cholesterol levels. If elevated triglycerides are present, addition of one of these drugs will assist in reaching the non-HDL-cholesterol goal. And *fifth,* treatment of nonlipid risk factors can be intensified. Finally, a combination of these options is advisable for some persons.

3) Baseline LDL cholesterol 100–129 mg/dL

NHANES III data showed that more than 30 percent of people with CHD have baseline LDL-cholesterol levels in the 100–129 mg/dL range. In clinical practice, however, misclassification of LDL-cholesterol levels from single measurements in individuals will be high. Many persons will have true baseline LDL-cholesterol levels ≥130 mg/dL. Baseline levels of LDL cholesterol are labile from one measurement to another. Regardless of apparent baseline level, the LDL-

cholesterol goal for all CHD patients is <100 mg/dL. The various options outlined in Table VI.1–2 can be applied to this category. Many persons with baseline LDL-cholesterol levels between 100 and 129 mg/dL will be able to attain LDL cholesterol <100 mg/dL through TLC especially if it includes plant stanols/sterols and increased viscous fiber. Others will require cholesterol-lowering drugs to reach this target. Clinical judgment is required as to when to initiate a cholesterol-lowering drug. If the LDL cholesterol falls near 100 mg/dL on dietary therapy alone, the physician has the option to forego a cholesterol-lowering drug for the present. This is particularly so if other lipid or nonlipid risk factors seem to need greater attention.

Once adequate LDL-lowering therapy has been attained, other lipid risk factors deserve attention. For example, if the patient has an elevated triglyceride or low-HDL cholesterol, a different lipid-lowering drug can be considered (e.g., nicotinic acid or fibric acid). The positive results of the VA-HIT trial showing the efficacy of gemfibrozil therapy alone in CHD patients have led some authorities to favor fibrates over statins in low-LDL patients with CHD. Overall, however, for monotherapy, clinical trials with statins have been more robust in their favorable outcomes than have fibrates. In addition, combined drug therapy (low-dose statin + fibrate [or nicotinic acid]) remains an option in such persons, provided that precautions are taken to prevent and monitor for side effects of lipid-lowering drugs used in combination.

4) Baseline LDL cholesterol <100 mg/dL

Some patients with CHD or CHD risk equivalent will have a baseline LDL cholesterol <100 mg/dL. These patients are already at their LDL-cholesterol goal. For them, further LDL lowering is not required. Attention shifts to other lipid or nonlipid risk factors. If triglycerides are elevated (≥200 mg/dL), the non-HDL cholesterol remains a secondary target of therapy. Alternative therapies to reduce VLDL-cholesterol levels to attain the non-HDL-cholesterol goal are statins or triglyceride-lowering drugs (nicotinic acid or fibrate). Furthermore, nonlipid risk factors may be largely responsible for the patient's CHD and thus may deserve intensive modification.

5) Initiating cholesterol-lowering drugs in hospitalized patients

Hospitalization for a coronary event or procedure provides a unique opportunity to initiate LDL-lowering therapy. Physicians should take advantage of this opportunity. In the past, this opportunity has often been lost due to confusion about the meaning of LDL-cholesterol levels obtained during hospitalization. Although it is true that LDL levels can change during an acute illness, this should not stand in the way of starting needed therapy. A few simple recommendations can guide initiation of LDL-lowering therapy during hospitalization. The guiding principle is that LDL cholesterol should be measured in all patients, preferably on admission, but in any case at some time during hospitalization, and can be used as a guide to start treatment (Ryder et al., 1984). Thus, the first 24 hours of hospital admission should be considered a "window of opportunity" during which a fasting lipoprotein profile should be obtained. Whereas as much as a 10 percent fall in LDL cholesterol may occur during this first day (due to heparinization, stress, diet, and other factors), a value quite close to the actual baseline for that individual will be obtained and will be crucial in the decision to initiate early cholesterol-lowering therapy.

If this first 24-hour "window" is missed, a fasting lipoprotein profile should still be obtained during hospitalization since an elevated LDL cholesterol in that setting will identify persons with even higher baseline LDL cholesterol. The following summarizes the ATP III position on initiation of LDL-lowering drugs during hospitalization of CHD-related events or procedures.

First, persons hospitalized with a coronary event or procedure should be discharged on *both* dietary therapy and drug therapy if the LDL cholesterol is ≥130 mg/dL.

Second, if the LDL is 100–129 mg/dL during hospitalization, clinical judgment should be used in deciding whether to initiate drug treatment at discharge. The initial LDL-cholesterol level obtained in the hospital may be the lowest value seen for this patient. LDL-cholesterol levels are decreased beginning in the first 24–48 hours after an event and may remain low for many weeks. Later, if necessary, therapy can be adjusted according to the LDL response.

Initiation of both TLC and LDL-lowering drugs at the time of hospital discharge has several advantages. First, at this time persons are particularly motivated to undertake and adhere to risk-lowering interventions. Second, failure to initiate indicated therapy early is one of the causes of a large "treatment gap" as outpatient follow up is often less consistent and more fragmented. Finally, new and ongoing studies suggest a very early benefit of LDL-cholesterol-lowering therapy (Arntz et al., 2000; O'Driscoll et al., 1997; Stenestrand and Wallentin, 2001; Stroes et al., 1995; Tamai et al., 1997). Recent support for this approach comes from the Myocardial Ischemia Reduction with Aggressive Cholesterol Lowering (MIRACL) Trial of over 3,000 persons hospitalized with non-Q myocardial infarction or unstable angina, with a mean hospital LDL-cholesterol level of 124 mg/dL. Statin treatment, initiated in the hospital, was safe and resulted in a 16 percent relative risk reduction in subsequent coronary events at 16 weeks (Schwartz et al., 2001). Finally, a large observational study from Sweden showed an adjusted 25 percent reduction in total mortality at one year for myocardial infarction patients started on statins in-hospital (Stenestrand 2001).

These latter trials (Schwartz et al., 2001 and Strenestrand 2001), while suggesting benefit from starting LDL-lowering therapy at time of acute coronary syndrome, do not preclude the need for further research on efficacy of drug therapy started at this time.

6) Special considerations for drug therapy in CHD patients

In most persons with CHD, goals for LDL-lowering therapy can be achieved with lifestyle therapies and drug monotherapy. The benefits of intensive LDL reduction with the use of drugs apparently extend to those with advanced age and poor cardiac prognosis; nonetheless, some persons with severe co-existing medical conditions that severely impair quality of life or life expectancy will not benefit.

A low HDL cholesterol (<40 mg/dL) is common in patients with CHD. A low HDL level can be secondary to other modifiable risk factors such as cigarette smoking, obesity, or physical inactivity. Beta-blockers can also lower HDL-cholesterol levels in CHD patients, but have been shown to be efficacious for reducing subsequent CHD events after myocardial infarction. Therefore, their benefit in CHD patients outweighs the drawback of HDL lowering. Secondary prevention trials show that statin therapy significantly reduces risk for major coronary events

even in patients with low HDL cholesterol; therefore in these patients, LDL remains the primary target of therapy. The VA-HIT study (Rubins et al., 1999) suggests that fibrate therapy also may be beneficial for patients with low HDL levels in whom LDL-cholesterol levels are near optimal.

c. General principles of primary prevention with drug therapy

Primary prevention pertains to individuals without clinically evident CHD. For those with CHD risk equivalents, primary and secondary prevention merge. The guidelines for consideration of drug therapy and target goals for primary prevention are shown in Table VI.1–3.

Table VI.1–3. Drug Therapy Consideration and Goals of Therapy for Primary Prevention

Risk Category	10-Year Risk for CHD	LDL cholesterol	
		Level at Which to Consider Drug Therapy	Primary Goal of Therapy
Multiple (2+) risk factors	>20% (includes all CHD Risk Equivalents*)	>100 mg/dL†	<100 mg/dL
	10–20%	≥130 mg/dL‡	<130 mg/dL
	<10%	≥160 mg/dL	<130 mg/dL
0–1 risk factor	<10%	≥190 mg/dL¥	<160 mg/dL

* Most patients with CHD risk equivalents have multiple risk factors and a 10-year risk >20 percent. They include patients with non-coronary forms of clinical atherosclerosis, diabetes, and multiple (2+) risk factors with a 10-year risk >20 percent by Framingham scoring.

† When LDL cholesterol is ≥130 mg/dL, a cholesterol-lowering drug can be started concomitantly with TLC. If baseline LDL cholesterol is 100–129 mg/dL, TLC should be started immediately. Concomitant use of drugs is optional; several options for drug therapy are available (e.g., statins, bile acid sequestrants, fibrates, nicotinic acid).

‡ When LDL cholesterol is in the range of 130–159 mg/dL, drug therapy can be used if necessary to reach the LDL-cholesterol goal of <130 mg/dL, after an adequate trial of TLC.

¥ When LDL cholesterol is in the range of 160–189 mg/dL, use of cholesterol-lowering drugs is optional, depending on response to TLC diet.

d. Drug considerations for persons with multiple (2+) risk factors

1) 10-year risk >20 percent

Persons with multiple (2+) risk factors whose 10-year risk for hard CHD is >20 percent are included in the category of CHD risk equivalent. As discussed in section VI.1.b, they are managed similarly to other CHD risk equivalents that include non-coronary forms of clinical atherosclerotic disease and diabetes. The LDL cholesterol goal in these patients is <100 mg/dL, and when LDL cholesterol is ≥130 mg/dL, an LDL-lowering drug can be started together with theraputic lifestyle changes. When baseline LDL cholesterol is 100–129 mg/dL, TLC is indicated and concomitant use of drugs is optional. Drug options include statins, bile acid sequestrants, fibrates, and nicotinic acid.

2) 10-year risk 10–20 percent

Here the LDL-cholesterol goal is <130 mg/dL. TLC should be introduced first. If this goal is not achieved after 3 months of TLC, drug therapy should be considered. A low dose of drug may suffice if TLC drops the LDL cholesterol to near 130 mg/dL. If not, a higher dose can be used. At the same time, if the metabolic syndrome is present, weight reduction and physical activity should be emphasized. Later, consideration can be given to modifying other lipid risk factors with nicotinic acid or fibrates if they have not been adequately controlled by TLC.

3) 10-year risk <10 percent

The LDL-cholesterol goal for multiple risk factors and 10-year risk <10 percent also is <130 mg/dL. However, LDL-lowering drugs are not to be considered unless LDL cholesterol remains ≥160 mg/dL on TLC. When 10-year risk is <10 percent, cost-effectiveness of drug therapy begins to erode, especially when the LDL-cholesterol level remains in the range of 130 to 159 mg/dL and other risk factors are appropriately controlled. On the other hand, when LDL-cholesterol concentrations ≥160 mg/dL occur with multiple (2+) risk factors, long-term (>10-year) risk for CHD is relatively high. Thus, drug therapy deserves consideration. Of course, costs and side effects of drugs must also be taken into account when contemplating lifetime drug therapy.

e. Drug considerations for persons with 0–1 risk factor, 10-year risk <10 percent

The LDL-cholesterol goal in this risk category is <160 mg/dL. For adults with severe elevations of LDL cholesterol (e.g., ≤220 mg/dL), drug therapy can be started simultaneously with TLC. When baseline LDL cholesterol is in the range of 190–219 mg/dL, a 3-month trial of TLC is indicated. If the LDL-cholesterol level remains ≥190 mg/dL after TLC, drug therapy should be considered for most persons. However, if LDL cholesterol falls to the range of 160–189 mg/dL on TLC, drug therapy is optional, depending on clinical judgment. Similarly, if baseline LDL cholesterol is 160–189 mg/dL, a 3-month trial of TLC is indicated; again, if the LDL level persists ≥160 mg/dL on TLC, drug therapy is optional. In either case, factors that favor drug therapy are severe, single risk factors, such as heavy smoking, a family history of premature CHD, very low HDL-cholesterol levels, and the presence of other emerging risk factors (see Section II). Likewise, if triglycerides are high (≥200 mg/dL), non-HDL cholesterol will be a secondary target of therapy.

2. Available drug therapies

a. Overview and general approach

The major classes of drugs for consideration are:

- HMG CoA reductase inhibitors (statins)—lovastatin, pravastatin, simvastatin, fluvastatin, atorvastatin
- Bile acid sequestrants—cholestyramine, colestipol, colesevelam
- Nicotinic acid—crystalline, timed-release preparations, Niaspan®

- Fibric acid derivatives (fibrates)—gemfibrozil, fenofibrate, clofibrate

Hormones are also discussed below:

- Estrogen replacement
- Selective estrogen receptor modulators

b. Major drugs

1) HMG CoA reductase inhibitors (statins)—lovastatin, pravastatin, simvastatin, fluvastatin, atorvastatin*

These drugs are summarized in Table VI.2–1. The HMG CoA reductase inhibitors are the most effective and practical class of drugs for reducing LDL-cholesterol concentrations. Results from five clinical trials with a mean duration of 5.4 years have documented a decrease in CHD and total mortality, reductions in myocardial infarctions, revascularization procedures, stroke, and peripheral vascular disease (LaRosa et al., 1999; Scandinavian . . . Study Group 1994; Shepherd et al., 1995; Sacks et al., 1996; Downs et al., 1998; Long-Term Intervention . . . Study Group 1998). These trials documented benefits in men and women, in middle-aged and older persons, and in primary and secondary prevention. Approximately 30,000 individuals were randomized to either placebo or statin therapy in these five clinical outcome trials. Statin therapy proved remarkably safe, with no major or unexpected adverse effects observed. Several other types of clinical trials with statin therapy also showed favorable results (Post Coronary Artery Bypass Graft Trial Investigators 1997; Knatterud et al., 2000). Beneficial outcomes in CHD parameters have been reported with almost all of the statins. Thus, statins are highly effective in lowering LDL-cholesterol levels (the primary target of therapy). Statin therapy reduces the risk of essentially every clinical manifestation of the atherosclerotic process; they are easy to administer with good patient acceptance. They have few drug-drug interactions, and they have a good record for safety.

---

* *Cerivastatin was voluntarily withdrawn from the market by the manufacturer following reports of fatal rhabdomyolysis to the FDA. A substantial proportion of the deaths occurred in patients taking both cerivastatin and gemfibrozil. Rhabdomyolysis associated with cerivastatin use has been reported significantly more frequently than for other statin drugs. Myopathy associated with other statin drugs occurs infrequently, and in most cases, stopping the drug reverses the problem. The significant benefits of statins—lowering cholesterol and reducing the risk for MI and death from CHD—outweigh the risk of developing myopathy or rhabdomyolysis.*

Table VI.2–1. Summary of HMG CoA Reductase Inhibitors

Available Drugs*	Lovastatin, pravastatin, simvastatin, fluvastatin, atorvastatin
Lipid/lipoprotein effects	LDL cholesterol - ↓ 18–55% HDL cholesterol - ↑ 5–15% Triglycerides - ↓ 7–30%
Major use	To lower LDL cholesterol
Contraindications • **Absolute** • **Relative**	 Active or chronic liver disease Concomitant use of cyclosporine, macrolide antibiotics, various anti-fungal agents and cytochrome P-450 inhibitors (fibrates and nicotinic acid should be used with appropriate caution)
Efficacy	Reduce risk for CHD and stroke
Safety	Side effects minimal in clinical trials
Major side/adverse effects	Myopathy, increased liver transaminases
Usual starting dose	Lovastatin - 20 mg Pravastatin - 20 mg Simvastatin - 20 mg Fluvastatin - 20 mg Atorvastatin - 10 mg
Maximum FDA-approved dose	Lovastatin - 80 mg Pravastatin - 40 mg Simvastatin - 80 mg Fluvastatin - 80 mg Atorvastatin - 80 mg
Available preparations	Lovastatin - 10, 20, 40 mg tablets Pravastatin - 10, 20, 40 mg tablets Simvastatin - 5, 10, 20, 40, 80 mg tablets Fluvastatin - 20, 40, mg capsules, 80 mg XL tablets Atorvastatin - 10, 20, 40, 80 mg tablets

* Cerivastatin was withdrawn from the market by the manufacturer in August, 2001.

Statins inhibit HMG CoA reductase, the rate-limiting step in cholesterol biosynthesis (Endo 1992). This change produces a lowering of LDL-cholesterol levels (Mabuchi et al., 1981; Tobert et al., 1982; Mabuchi et al., 1983; Davignon et al., 1992). Inhibition of cholesterol synthesis reduces hepatic cholesterol content, resulting in increased expression of LDL receptors, which lowers serum LDL-cholesterol levels (Bilheimer et al., 1983). Intermediate density lipoprotein (IDL) and VLDL remnants also are removed via the LDL receptor. The latter effect contributes to lowering of triglyceride-rich lipoproteins (TGRLP) by statins (Vega and Grundy, 1990b; Broyles et al., 1995; Bakker-Arkema et al., 1996). Statins also appear to reduce hepatic release of lipoproteins into the circulation (Arad et al. 1990; 1992); this effect may be due in part to enhanced removal of lipoproteins by LDL receptors within hepatocytes or in the space of Disse (Twisk et al., 2000). In some persons with homozygous familial hypercholesterolemia, high

doses of statins lower LDL-cholesterol levels (Marais et al., 1997; Postiglione et al., 1999; Raal et al., 2000). This latter action is mediated either by increased expression of residual LDL-receptor activity or by inhibition of lipoprotein assembly.

The statins are generally administered with the evening meal or at bedtime. Somewhat greater LDL-cholesterol reductions occur when they are administered at night than in the morning. Most statins have a high first-pass clearance by the liver and a short half-life. Atorvastatin and its metabolites, in contrast, have very long half-lives and thus morning administration is equally effective. Depending upon the specific statin and the dose administered, reductions in LDL cholesterol of 18–55 percent are observed (Jones et al., 1998; Stein 1998). The reductions in LDL cholesterol are dose-dependent and log-linear, so that with each doubling of the dose of statin, LDL-cholesterol levels fall by about 6 percent. HDL cholesterol generally rises by 5–10 percent, but greater increases usually occur in persons with low HDL and elevated triglycerides (LaRosa et al., 1999; Scandinavian . . . Study Group 1994; Shepherd et al., 1995; Sacks et al., 1996; Downs et al., 1998; Long-Term Intervention . . . Study Group 1998; Jones et al., 1998; Stein 1998).

The reductions in triglycerides with the statins generally range from 7–30 percent (LaRosa et al., 1999; Scandinavian . . . Study Group 1994; Shepherd et al., 1995; Sacks et al., 1996; Downs et al., 1998; Long-Term Intervention . . . Study Group 1998; Jones et al., 1998; Stein 1998). In individuals with triglyceride levels of <150 mg/dL, triglyceride responses are inconsistent. But when triglyceride levels are >200 mg/dL, triglycerides fall in direct proportion to LDL-cholesterol lowering (Stein et al., 1998). With very high triglyceride levels, however, LDL-cholesterol lowering is less than that observed with low triglyceride levels. The statins reduce the concentration of all LDL particles, including the small LDL particles, as well as IDL and VLDL remnants (Vega and Grundy, 1990b; Broyles et al., 1995). The combined lowering of LDL and TGRLP with the statins makes them efficacious for reducing non-HDL cholesterol in persons with atherogenic dyslipidemia or combined hyperlipidemias.

The statins are well-tolerated by most persons. Elevated hepatic transaminases generally occur in 0.5–2.0 percent of cases and are dose-dependent (Hsu et al., 1995; Bradford et al., 1991). Bradford et al. (1994) reported that the 2-year incidence of serum transaminase with lovastatin therapy was 0.1 percent for 20 mg/day and 1.9 percent for 80 mg/day. Whether transaminase elevation with statins constitutes true hepatotoxicity has not been determined. In fact, the incidence of clinically important (>3 times upper limit of normal) transaminase elevations in the large statin trials is the same for statin as for placebo. Progression to liver failure is exceedingly rare, if it ever occurs; this observation has led some authorities to conclude that statins do not carry clinically significant hepatotoxicity. Reversal of transaminase elevation is frequently noted with reduction of dose or even continued administration of the same dose. Nonetheless, persons who develop increased transaminase levels should be monitored with a second liver function evaluation to confirm the finding and be followed thereafter with frequent liver function tests until the abnormality(ies) return to normal. Should an increase in transaminase levels of >3 times upper limit of normal or greater persist, discontinuation of therapy is recommended by the FDA. According to the clinical experience of ATP III panel experts, if the statin has been discontinued, transaminase elevations often do not recur with either rechallenge or selection of another statin (Hunninghake 1990; Cressman et al., 1988). Cholestasis and active liver disease are listed by the

FDA as contraindications to statins. It is not known whether statins worsen the outcome in persons with chronic transaminase elevations due to hepatitis B or C. There is no evidence that they are harmful in patients with fatty liver due to obesity. Their use in persons with various forms of chronic liver disease depends on clinical judgment that balances proven benefit against risk.

That statins can produce myopathy under some circumstances is well established. An elevation of creatine kinase is the best indicator of statin-induced myopathy. Unfortunately, statins have often been discontinued for suspected myopathy which in fact is not present. A common complaint is non-specific muscle aches or joint pains that may be falsely attributed to statin therapy; these symptoms are usually not accompanied by significant increases in creatine kinase. In placebo-controlled trials, the incidence of these complaints is similar between placebo and active drug therapy, suggesting that statins are not responsible in many cases (Bradford et al., 1991). Sometimes, nonetheless, persons can develop clinically significant myopathy, which is characterized by muscle aches, soreness, or weakness, and elevated creatine kinase levels, generally greater than ten times the upper limit of normal. Overall, the incidence of myopathy with elevations in serum creatine kinase during statin therapy is low (Bradford et al., 1994; Insull et al., 2000; Davidson et al., 2000). Failure to recognize myopathy and to discontinue drug therapy can lead to rhabdomyolysis, myoglobinuria, and acute renal necrosis (Pierce et al., 1990). Myopathy is most likely to occur in persons with complex medical problems and/or who are taking multiple medications. Older patients may also be more susceptible. It occurs less frequently with statin monotherapy, but more frequently when statins are used in combination with a variety of medications including cyclosporine, fibrates, macrolide antibiotics, certain anti-fungal drugs, and nicotinic acid (Wanner et al., 1997; Goldman et al., 1989; Hanston and Horn, 1998). Some of the drug-drug interactions involve specific interactions with the cytochrome P-450 drug metabolizing system, especially those involving the 3A4 isozyme (Davidson 2000; Gruer et al., 1999). Routine laboratory monitoring of creatine kinase is of little value in the absence of clinical signs or symptoms. Therefore, all persons started on statins should be instructed to immediately report muscle pain and weakness or brown urine, and a creatine kinase measurement should be done. If myopathy is present or strongly suspected, the statin should be discontinued immediately.

Evidence statements: *HMG CoA reductase inhibitors (statins) are powerful LDL-lowering drugs (A1). Statin therapy reduces risk for acute coronary syndromes, coronary procedures, and other coronary outcomes in both primary and secondary prevention (A1). It also reduces risk for stroke in secondary prevention (A1). Treatment with statins is generally safe, although rarely persons experience myopathy (D1). Myopathy is more likely in persons with complex medical problems or in those who are taking multiple medications (D1).*
Recommendation: *Statins should be considered as first-line drugs when LDL-lowering drugs are indicated to achieve LDL treatment goals.*

2) Bile acid sequestrants—cholestyramine, colestipol, colesevelam

These drugs are summarized in Table VI.2–2. The major action of bile acid sequestrants is to lower LDL cholesterol (Insull et al., 1991; Hunninghake et al., 1995; Superko et al., 1992; Davidson et al., 1999; Lipid Research Clinics Program 1984a). Therapy with cholestyramine reduced the risk of CHD in the Lipid Research Clinics Coronary Primary Prevention Trial (Lipid Research Clinics Program 1984a,b). Beneficial outcomes also occurred in other clinical trials in which sequestrants were combined with other lipid-modifying drugs (Blankenhorn et al., 1987; Brown et al., 1990). Sequestrants add to the LDL-lowering effects of other drugs, notably statins (Lovastatin Study Group III 1988; Pravastatin Multicenter Study Group II 1993; Heinonen et al., 1996). They remain unabsorbed in their passage through the gastrointestinal tract and lack systemic toxicity. Their disadvantages are two-fold. Because of their bulk, they lack convenience of administration; they also cause various gastrointestinal symptoms, notably constipation.

Table VI.2–2. Summary of Bile Acid Sequestrants

Available drugs	Cholestyramine, colestipol, colesevelam
Lipid/lipoprotein effects	LDL cholesterol - ↓ 15–30% HDL cholesterol - ↑ 3–5% Triglycerides - no effect or increase
Major use	To lower LDL cholesterol
Contraindications	
• **Absolute**	Familial dysbetalipoproteinemia Triglycerides >400 mg/dL
• **Relative**	Triglycerides >200 mg/dL
Efficacy	Clinical trial evidence of CHD risk reduction
Safety	Clinical trial evidence of lack of systemic toxicity; GI side effects common
Major side/adverse effects	Upper and lower gastrointestinal complaints common Decrease absorption of other drugs
Usual daily dose	Cholestyramine - 4–16g Colestipol - 5–20g Colesevelam - 2.6–3.8g
Maximum daily dose	Cholestyramine - 24g Colestipol - 30g Colesevelam - 4.4g
Available preparations	Cholestyramine - 9g packets (4g drug) - 378g bulk - 5g packets (4g drug) "light" - 210g bulk Colestipol - 5g packets (5g drug) - 450g bulk Colesevelam - 625 mg tablets

The sequestrants bind bile acids in the intestine through anion exchange; this binding reduces the enterohepatic recirculation of bile acids, which releases feedback regulation on conversion of cholesterol to bile acids in the liver. The resulting decrease in hepatocyte cholesterol content enhances LDL-receptor expression, which in turn lowers serum LDL-cholesterol concentrations (Rudling et al., 1990). In some persons, sequestrants increase hepatic VLDL production (Beil et al., 1982a), thereby raising serum triglyceride levels (Knopp 1999).

Cholestyramine and colestipol are both administered as powders that must be mixed with water or juice. They usually are given once or twice daily with meals. Colestipol also comes in 1g tablets. The LDL-cholesterol-lowering effect of 4g of cholestyramine equals that of 5g of colestipol. Eight to 10 g/day cholestyramine or 10–20 g/day colestipol reduce LDL-cholesterol concentrations by 10–20 percent. Smaller doses of sequestrants (8–10 g/day) generally are well-tolerated; higher doses (16–20 g/day) are less well-tolerated. Colesevelam, a recently marketed drug, is a much more potent bile acid sequestrant. It has been primarily evaluated at doses of 2.6–3.8g/day, and reductions in LDL cholesterol of 12–18 percent are reported (Davidson et al., 1999). Colesevelam is more easily administered and better tolerated than other sequestrants.

Sequestrants add to LDL lowering when combined with other cholesterol-lowering drugs. Whereas doubling the dose of a statin produces only a 6 percent further reduction in LDL cholesterol, adding a moderate dose of a sequestrant to a statin can further lower LDL cholesterol by 12–16 percent (Denke and Grundy, 1995; Knapp et al., 2001; Davidson et al., 2001). Thus, sequestrants are useful in combined drug therapy with statins. Further, sequestrants combined with plant stanol esters apparently enhance LDL lowering (Gylling 1999; Gylling and Miettinen, 1999b). Thus, sequestrants in combination with TLC, including other dietary options for lowering LDL cholesterol (plant stanols/sterols and viscous fiber), should enable many persons to achieve their LDL-cholesterol goal without the need for an agent that is systemically absorbed.

Since sequestrants tend to raise serum triglycerides, they are contraindicated as monotherapy in persons with high triglycerides (>400 mg/dL) and in familial dysbetalipoproteinemia (Crouse 1987). They generally should be used as monotherapy only in persons with triglyceride levels of <200 mg/dL. Bile acid sequestrants are not contradicted in patients with type 2 diabetes (Garg and Grundy, 1994).

Sequestrant therapy can produce a variety of gastrointestinal symptoms, including constipation, abdominal pain, bloating, fullness, nausea, and flatulence (Lipid Research Clinics Program 1984a). These symptoms often can be lessened by moderate doses of standard sequestrants or use of colesevelam. Sequestrants are not absorbed from the intestine, but can decrease the absorption of a number of drugs that are administered concomitantly. The general recommendation is that other drugs should be taken either an hour before or 4 hours after administration of the sequestrant. Colesevelam, which apparently does not decrease absorption of co-administered drugs, need not be administered separately from other drugs.

Evidence statements: *Bile acid sequestrants produce moderate reductions in LDL cholesterol (A1). Sequestrant therapy reduces risk for CHD (A1). They are additive in LDL-cholesterol lowering in combination with other cholesterol-lowering drugs (C1). They lack systemic toxicity (A1).*
Recommendation: *Bile acid sequestrants should be considered as LDL-lowering therapy for persons with moderate elevations in LDL cholesterol, for younger persons with elevated LDL cholesterol, for women with elevated LDL cholesterol who are considering pregnancy, for persons needing only modest reductions in LDL cholesterol to achieve target goals, and for combination therapy with statins in persons with very high LDL-cholesterol levels.*

3) Nicotinic acid

This drug is summarized in Table VI.2–3. Nicotinic acid or niacin favorably affects all lipids and lipoproteins when given in pharmacological doses. Nicotinamide, which is sometimes confused with niacin or nicotinic acid, has only vitamin functions and does not affect lipid and lipoprotein levels. Nicotinic acid lowers serum total and LDL-cholesterol and triglyceride levels and also raises HDL-cholesterol levels. Smaller doses often increase HDL-cholesterol levels, but doses of 2–3 g/day are generally required to produce LDL-cholesterol reductions of 15 percent or greater (Luria 1988; Knopp et al., 1985; Guyton et al., 1998; Guyton et al., 2000; Drood et al., 1991; Vega and Grundy, 1994). Nicotinic acid can also lower Lp(a) up to 30 percent with high doses (Carlson et al., 1989). Whether Lp(a) lowering by nicotinic acid therapy reduces risk for CHD is not known. Nicotinic acid was shown to reduce the risk of recurrent myocardial infarction in the Coronary Drug Project (Coronary Drug Project Research Group 1975), and total mortality was decreased in a 15-year followup of the persons who had originally received nicotinic acid (Canner et al., 1986). Decreased rates of atherosclerotic progression were also observed in three quantitative angiographic trials: FATS (Brown et al., 1990), HATS (Brown BG et al., 2000), and CLAS (Blankenhorn et al., 1987). In all of these trials, nicotinic acid was combined with other LDL-lowering drugs and effects were compared to placebo.

Many crystalline preparations of nicotinic acid are available without a prescription and are inexpensive. Some preparations and a new formulation, Niaspan®, are available by prescription. Niaspan® is a proprietary extended-release formulation of nicotinic acid; its use is associated with less flushing than occurs with usual crystalline preparations.

Table VI.2–3. Summary of Nicotinic Acid

Available drugs	Crystalline nicotinic acid Sustained-release (or timed release) nicotinic acid Extended-release nicotinic acid (Niaspan®)
Lipid/lipoprotein effects	LDL cholesterol - ↓ 5–25% HDL cholesterol - ↑ 15–35% Triglycerides - ↓ 20–50%
Major use	Useful in most lipid and lipoprotein abnormalities
Contraindications • **Absolute** • **Relative**	 Chronic liver disease, severe gout Hyperuricemia; high doses in type 2 diabetes
Efficacy	Clinical trial evidence of CHD risk reduction
Safety	Serious long-term side effects rare for crystalline form; serious hepatotoxicy may be more common with sustained-release form
Major side/adverse effects	Flushing, hyperglycemia, hyperuricemia or gout, upper gastrointestinal distress, hepatotoxicity, especially for sustained-release form
Usual daily dose	Crystalline nicotinic acid - 1.5–3g Sustained-release nicotinic acid - 1–2g Extended-release nicotinic acid (Niaspan®) - 1–2g
Maximum daily dose	Crystalline nicotinic acid - 4.5 g Sustained-release nicotinic acid - 2g Extended-release nicotinic acid (Niaspan®) - 2g
Available preparations	Many OTC preparations by various manufacturers for both crystalline and sustained-release nicotinic acid. The extended-release preparation (Niaspan®) is a prescription drug.

Nicotinic acid appears to alter lipid levels by inhibiting lipoprotein synthesis and decreasing the production of VLDL particles by the liver. It inhibits the peripheral mobilization of free fatty acids, reducing hepatic secretion of VLDL (Langer and Levy, 1971; Grundy et al., 1981). It decreases the plasma concentration of triglyceride, VLDL remnants, and IDL (Martin-Jadraque et al., 1996; Mostaza et al., 1997); and it causes a shift in LDL composition from the small, denser LDL particles to the larger, more buoyant LDL particles (Superko and Krauss, 1992). Nicotinic acid also is the most effective lipid-lowering drug for raising HDL levels (Vega and Grundy, 1994). The changes in HDL cholesterol and triglyceride concentrations tend to be curvilinear (log-linear); thus, smaller doses of nicotinic acid still produce significant increases in HDL or reductions in triglyceride with fewer side effects. The increases in HDL cholesterol are generally in the range of 15–30 percent (Vega and Grundy, 1994), but increases of 40 percent have been noted with very high doses (Luria 1988; Knopp et al., 1985; Knopp et al., 1998; McKenney et al., 1994). The sustained-release preparations usually increase HDL cholesterol

levels by only 10–15 percent (Knopp et al., 1998; McKenney et al., 1994) with the exception of Niaspan® which retains the HDL-raising potential of the crystalline form. Nicotinic acid typically reduces triglyceride levels by 20 to 35 percent, but reductions of 50 percent have been noted with high doses in hypertriglyceridemic persons (Luria 1988; Knopp et al., 1985; Guyton et al., 1998; Guyton et al., 2000; Drood et al., 1991; Vega and Grundy, 1994). Among lipid-lowering agents, nicotinic acid appears to be the most effective for favorably modifying all of the lipoprotein abnormalities associated with atherogenic dyslipidemia.

The degree of LDL-cholesterol lowering by nicotinic acid has varied in different studies. Some studies report little or no change in LDL levels (Vega and Grundy, 1994). However, in one carefully controlled study in patients with hypercholesterolemia (Illingworth et al., 1994), reductions in LDL cholesterol of 5 percent, 16 percent, and 23 percent were noted with daily doses of 1.5, 3.0 and 4.5 grams, respectively. Extended-release nicotinic acid (Niaspan®), which is administered as a single bedtime dose, has been shown to reduce LDL cholesterol by 15 percent at 2 g/day (Guyton et al., 1998; Capuzzi et al., 1998; Guyton et al., 2000; Knopp et al., 1998). Because many persons cannot tolerate higher doses, nicotinic acid is typically not used primarily to lower LDL levels. Instead, it is generally used in combination with other drugs, especially the statins (Guyton and Capuzzi, 1998).

Nicotinic acid therapy can be accompanied by a number of side effects. Flushing of the skin is common with the crystalline form and is intolerable for some persons. However, most persons develop tolerance to the flushing after more prolonged use of the drug. Less severe flushing generally occurs when the drug is taken during or after meals, or if aspirin is administered prior to drug ingestion. A newer preparation, Niaspan®, is reported to cause less flushing than crystalline nicotinic acid. A variety of gastrointestinal symptoms, including nausea, dyspepsia, flatulence, vomiting, diarrhea, and activation of peptic ulcer may occur. Three other major adverse effects include hepatotoxicity, hyperuricemia and gout, and hyperglycemia. The risk of all three is increased with higher doses, especially at doses of 2 g or higher. The risk of hepatotoxicity appears to be greater with the sustained-release preparations, although not with Niaspan®. Impending hepatotoxicity should be considered if there is a dramatic reduction in plasma lipids (Tato et al., 1998). Nicotinic acid reduces insulin sensitivity, and higher doses (>3 g per day) often worsen hyperglycemia in persons with type 2 diabetes (Garg and Grundy, 1990). Recent studies suggest that lower doses do not unduly worsen hyperglycemia (Elam et al., 2000; Grundy et al., 2001b). Other adverse effects include conjunctivitis, nasal stuffiness, acanthosis nigricans, ichthyosis, and retinal edema (toxic amblyopia).

Nicotinic acid is usually administered in two or three doses a day, with the exception of Niaspan®, which is administered as a single dose at bedtime. Crystalline nicotinic acid is the least expensive drug, and small doses are especially useful for increasing HDL-cholesterol levels or lowering triglycerides. The timed-release (sustained-release) preparations are designed to minimize cutaneous flushing. When switching from crystalline nicotinic acid to a sustained-release preparation, smaller doses should be used to reduce the risk of hepatotoxicity. The dose can then be carefully titrated upward, generally to a level not exceeding 2 g/day. Rare cases of fulminant hepatitis have been reported with sustained-release preparations (Mullin et al., 1989; Etchason et al., 1991; Rader et al., 1992). Considerable variation exists among different sustained-release preparations, and persons should be advised not to switch from one preparation

to another. Niaspan® is an extended-release preparation; however, its more rapid-release than sustained-release preparation appears to reduce the risk of hepatotoxicity. Niaspan® also is associated with less flushing than with crystalline nicotinic acid. Since many nicotinic acid preparations are available without a prescription, persons should be instructed that nicotinic acid is associated with many severe adverse effects and regular monitoring by a health professional is essential.

Although nicotinic acid can be highly efficacious and favorably modify the lipoprotein profile, especially in patients with atherogenic dyslipidemia, its long-term use is limited for many patients by side effects (Gibbons et al., 1995). For this reason, the drug is generally reserved for patients at higher short-term risk, i.e., for those with CHD, CHD risk equivalents, or multiple (2+) risk factors with 10-year risk for CHD of 10–20 percent. Its use for long-term prevention of CHD in persons with 10-year risk <10 percent is not well established, and in such persons, should be used more cautiously. For example, it is not known whether long-term use of nicotinic acid for lower-risk persons with isolated low HDL cholesterol is beneficial.

Evidence statements: *Nicotinic acid effectively modifies atherogenic dyslipidemia by reducing TGRLP, raising HDL cholesterol, and transforming small LDL into normal-sized LDL (C1). Among lipid-lowering agents, nicotinic acid is the most effective HDL-raising drug (C1). Nicotinic acid usually causes a moderate reduction in LDL-cholesterol levels (C1), and it is the most effective drug for reducing Lp(a) levels (C1).*
Evidence statements: *Nicotinic acid therapy is commonly accompanied by a variety of side effects, including flushing and itching of the skin, gastrointestinal distress, glucose intolerance, hepatotoxicity, hyperuricemia, and other rarer side effects (C1). Hepatotoxicity is more common with sustained-release preparations (D1).*
Evidence statement: *Nicotinic acid therapy produces a moderate reduction in CHD risk, either when used alone or in combination with other lipid-lowering drugs (A2, B2).*
Recommendation: *Nicotinic acid should be considered as a therapeutic option for higher-risk persons with atherogenic dyslipidemia. It should be considered as a single agent in higher-risk persons with atherogenic dyslipidemia who do not have a substantial increase in LDL-cholesterol levels, and in combination therapy with other cholesterol-lowering drugs in higher-risk persons with atherogenic dyslipidemia combined with elevated LDL-cholesterol levels.*
Recommendation: *Nicotinic acid should be used with caution in persons with active liver disease, recent peptic ulcer, hyperuricemia and gout, and type 2 diabetes. High doses of nicotinic acid (>3 g per day) generally should be avoided in persons with type 2 diabetes, although lower doses may effectively treat diabetic dyslipidemia without significantly worsening hyperglycemia.*

4) Fibric acid derivatives (fibrates): gemfibrozil, fenofibrate, clofibrate

These drugs are summarized in Table VI.2–4. There are three fibrates—gemfibrozil, fenofibrate, and clofibrate—currently available in the United States. Other fibrate preparations, including

bezafibrate and ciprofibrate, are available outside the United States. The fibrates are primarily used for lowering triglycerides because the LDL-cholesterol-lowering effects of gemfibrozil and clofibrate are generally in the range of 10 percent or less in persons with primary hypercholesterolemia. Only slight changes in LDL cholesterol are noted in persons with combined hyperlipidemia, and LDL-cholesterol levels generally rise on fibrate therapy in persons with hypertriglyceridemia (Leaf et al., 1989; Pauciullo et al., 1990). Fenofibrate frequently reduces LDL-cholesterol levels by 15 to 20 percent when triglycerides are not elevated; other fibrates not available in the United States are also more effective in lowering LDL cholesterol (Kornitzer et al., 1994; Gavish et al., 1986; Illingworth et al., 1982). Therapy with clofibrate and gemfibrozil reduced risk of fatal and non-fatal myocardial infarction in two large primary prevention trials (Committee of Principal Investigators 1978; Frick et al., 1987), and gemfibrozil therapy reduced CHD death and non-fatal myocardial infarction and stroke in a recently reported secondary prevention trial (Rubins et al., 1999). However, this beneficial effect on cardiovascular outcomes has not been observed in all large fibrate trials (Coronary Drug Project Research Group 1975; Bezafibrate Infarction Prevention Study 2000).

Table VI.2–4. Summary of Fibric-Acid Derivatives

Available drugs	Gemfibrozil, fenofibrate, clofibrate
Lipid/lipoprotein effects	LDL cholesterol - ↓ 5–20% (in nonhypertriglyceridemic persons); may be increased in hypertriglyceridemic persons HDL cholesterol - ↑ 10–35% (more in severe hypertriglyceridemia) Triglycerides - ↓ 20–50%
Major uses	Hypertriglyceridemia, atherogenic dyslipidemia
Contraindications	Severe hepatic or renal insufficiency
Efficacy	Clinical trials indicate a moderate reduction in CHD risk
Safety	Serious side effects seemingly do not occur in the long term, although early studies suggested an increase in non-CHD mortality
Major side/adverse effects	Dyspepsia, various upper gastrointestinal complaints, cholesterol gallstones, myopathy
Usual daily dose	Gemfibrozil - 600 mg bid Fenofibrate - 200 mg daily Clofibrate - 1000 mg bid
Maximum daily dose	Gemfibrozil - 1200 mg Fenofibrate - 200 mg Clofibrate - 2000 mg
Available preparations	Gemfibrozil - 600 mg tablets Fenofibrate - 67 and 200 mg tablets Clofibrate - 500 mg capsules

There has been some concern about the short-term safety of the fibrates. Although nonfatal myocardial infarction fell by 25 percent in the WHO Clofibrate Study, a primary prevention

study, total mortality was significantly higher in the clofibrate group, due to an increase in non-CHD deaths (Committee of Principal Investigators 1978). The use of clofibrate in general medical practice decreased markedly after this study. The Helsinki Heart Study, a primary prevention trial employing gemfibrozil, demonstrated a 37 percent reduction in fatal and non-fatal myocardial infarctions and no change in total mortality during the course of the study (Frick et al., 1987). After 8.5–10 years of followup, non-cardiac death and all cause mortality were numerically higher in the group that had received gemfibrozil during the study (Huttunen et al., 1994). However, this increase was *not* statistically significant. Moreover, after 10 years of followup, no difference in cancer rates was observed between those who had received gemfibrozil or placebo. In the Veterans Administration HDL Intervention Trial (VA-HIT) (Rubins et al., 1999), a secondary prevention trial, gemfibrozil therapy reduced risk for CHD death and nonfatal myocardial infarction by 22 percent; stroke rates also were reduced by gemfibrozil therapy. In this study, there was no suggestion of an increased risk of non-CHD mortality. Neither was there an increase in non-CHD mortality from fibrate therapy in the recently reported Bezafibrate Infarction Prevention (BIP) study (Bezafibrate Infarction Prevention Study 2000). Furthermore, worldwide clinical experience with various fibrates is vast. No evidence of specific toxicity that enhances non-CHD mortality has emerged. This experience, taken in the light of all the clinical trials, provides little support for the concern that fibrates carry significant short-term toxicity that precludes their use for appropriately selected persons.

The mechanism of action of the fibrates is complex and there may be some variation among the drugs in this class. Recent research shows fibrates to be agonists for the nuclear transcription factor *peroxisome proliferator activated receptor-alpha (PPAR-alpha)* (Schoonjans et al., 1996). Through this mechanism, fibrates downregulate the apolipoprotein CIII gene and upregulate genes for apolipoprotein A-1, fatty acid transport protein, fatty acid oxidation, and possibly lipoprotein lipase (Fruchart et al., 1998). Its effects on lipoprotein lipase and apolipoprotein CIII (an inhibitor of lipoprotein lipase) enhance the catabolism of TGRLP, whereas increased fatty acid oxidation reduces formation of VLDL triglycerides. These effects account for serum triglyceride lowering, which is the major action of fibrates. Serum triglyceride lowering combined with increased synthesis of apolipoprotein AI and AII tend to raise HDL-cholesterol levels (Vu-Dac et al., 1995). Triglyceride lowering also transforms small, dense LDL into normal-sized LDL (Eisenberg et al., 1984). The effect of PPAR activity on other atherogenic mechanisms is now being evaluated (Pineda Torra et al., 1999; Neve et al., 2000).

The fibrates typically reduce triglyceride by 25–50 percent; the greater reductions generally occur in severely hypertriglyceridemic individuals (Leaf et al., 1989). Fibrates usually raise HDL cholesterol by 10–15 percent, but greater increases can occur in persons with very high triglyceride levels and very low HDL-cholesterol levels. Thus fibrates, like nicotinic acid, primarily target atherogenic dyslipidemia. In addition, the ability of fibrates to lower triglycerides has led to their wide usage in persons having very high triglyceride levels and chylomicronemia (Leaf et al., 1989). The purpose of fibrate therapy in such persons is to reduce the risk for acute pancreatitis. Their value for this purpose is well recognized. Finally, fibrates are highly effective for reducing beta-VLDL concentrations in persons with dysbetalipoproteinemia (Mahley and Rall, 1995).

Whether fibrate modification of atherogenic dyslipidemia reduces risk for CHD is an important issue. Results of clinical trials with fibrates are summarized in Table II.3–1. The major primary prevention trials were the WHO clofibrate trial and the Helsinki Heart Study gemfibrozil trial (Committee of Principal Investigators 1978; Frick et al., 1987). In both trials, CHD incidence was significantly reduced by fibrate therapy. Early secondary prevention trials with clofibrate therapy gave suggestive evidence of CHD risk reduction. In another secondary prevention trial, the Coronary Drug Project, clofibrate therapy failed to significantly reduce risk for CHD (Coronary Drug Project Research Group 1975). Likewise, in the BIP trial, bezafibrate therapy did not significantly reduce recurrent major coronary events in persons with established CHD (Bezafibrate Infarction Prevention Study 2000). In contrast, gemfibrozil therapy in the VA-HIT trial showed wide benefit by significantly reducing CHD events and strokes in persons with established CHD (Table II.3–1 and Table II.6–3). Thus, taken as a whole, clinical trials of fibrate therapy strongly suggest a reduction in CHD incidence, although results are less robust than with statin therapy. Further, a reduction in total mortality, which would have required a greater reduction in CHD mortality than observed, has not been demonstrated with fibrate therapy (see Table II.9–1). This failure does not rule out a benefit of fibrate therapy but certainly suggests less efficacy than with statin therapy.

Several studies have employed fibrates in combination with LDL-lowering drugs in persons with combined hyperlipidemia (elevated LDL + atherogenic dyslipidemia). Combination therapy improves the overall lipoprotein profile compared to either fibrates or LDL-lowering drugs alone. This finding has led to a movement for considering use of fibrates in combination with statins in high-risk individuals whose triglyceride levels are still elevated. In some persons, this combination may better achieve the secondary target for non-HDL cholesterol than will statins alone. Nonetheless, to date no clinical trials have been published that compare statins vs. statins + fibrates on CHD outcomes.

The fibrates are generally well-tolerated in most persons. Gastrointestinal complaints are the most common complaints. All drugs in this class appear to increase the lithogenicity of bile, increasing the likelihood of cholesterol gallstones (Palmer 1987). A portion of the excess deaths reported in the WHO Clofibrate Study was related to gallstone disease (Coronary Drug Project Research Group 1977). The fibrates bind strongly to serum albumin and so may displace other drugs that bind with albumin. For example, fibrates displace warfarin from its albumin-binding sites, thereby increasing the latter's anticoagulant effect. Fibrates are excreted primarily by the kidney; consequently, elevated serum levels occur in persons with renal failure and risk for myopathy is greatly increased. The combination of fibrate with a statin also increases the risk for myopathy, which can lead to rhabdomyolysis (Pierce et al., 1990; Duell et al., 1998). None of these well-established side effects can account for the increased total mortality observed in the WHO clofibrate study (Report of the Committee of Principal Investigators 1980; 1984). The increase in non-CHD deaths remains unexplained. An increase in non-CHD mortality has not been confirmed by subsequent trials with fibrate therapy.

Evidence statements: *Fibrates are effective for modifying atherogenic dyslipidemia, and particularly for lowering serum triglycerides (C1). They produce moderate elevations of HDL cholesterol (C1). Fibrates also are effective for treatment of dysbetalipoproteinemia (elevated beta-VLDL) (C1). They also can produce some lowering of LDL, the degree of which may vary among different fibrate preparations (C1). Fibrates also can be combined with LDL-lowering drugs in treatment of combined hyperlipidemia to improve the lipoprotein profile, although there is no clinical-trial evidence of efficacy for CHD risk reduction with combined drug therapy (C1, D1).*
Evidence statements: *Fibrate therapy moderately reduces risk for CHD (A2, B1). It may also reduce risk for stroke in secondary prevention (A2).*
Evidence statements: *Evidence for an increase in total mortality due to an increased non-CHD mortality, observed in the first large primary prevention trial with clofibrate, has not been substantiated in subsequent primary or secondary prevention trials with other fibrates (gemfibrozil or bezafibrate) (A2, B1). Nonetheless, fibrates have the potential to produce some side effects. Fibrate therapy alone carries an increased risk for cholesterol gallstones (A2), and the combination of fibrate and statin imparts an increased risk for myopathy (B2).*
Recommendations: *Fibrates can be recommended for persons with very high triglycerides to reduce risk for acute pancreatitis. They also can be recommended for persons with dysbetalipoproteinemia (elevated beta-VLDL). Fibrate therapy should be considered an option for treatment of persons with established CHD who have low levels of LDL cholesterol and atherogenic dyslipidemia. They also should be considered in combination with statin therapy in persons who have elevated LDL cholesterol and atherogenic dyslipidemia.*

c. Other drugs

Probucol is no longer available in the United States and in most other countries. This drug has powerful antioxidant properties, which is theoretically beneficial. In one angiographic trial, probucol therapy failed to retard femoral atherogenesis; neither was a reduction in CHD risk observed. There is some current interest in reports that probucol reduced the restenosis rates following angioplasty (Tardif et al., 1997; Rodes et al., 1998).

d. n-3 fatty acids

n-3 fatty acids (linolenic acid, DHA, and EPA) have two potential uses. In higher doses, DHA and EPA lower serum triglycerides by reducing hepatic secretion of triglyceride-rich lipoproteins. They represent alternatives to fibrates or nicotinic acid for treatment of hypertriglyceridemia, particularly chylomicronemia. They are available in capsules of fish oil, and doses of 3 to 12 g/day have been used depending on tolerance and severity of hypertriglyceridemia.

Recent clinical trials also suggest that relatively high intakes of n-3 fatty acids (1–2 g/day) in the form of fish, fish oils, or high-linolenic acid oils will reduce risk for major coronary events in persons with established CHD (see Section V.3.c). Although this usage falls outside the realm of

"cholesterol management," the ATP III panel recognizes that n-3 fatty acids can be a therapeutic option in secondary prevention. The n-3 fatty acids are recommended only as an option because the strength of the clinical trial evidence is moderate at present. The n-3 fatty acids can be derived from either foods (n-3 rich vegetable oils or fatty fish) or from fish-oil supplements. In the view of the ATP III panel, more definitive clinical trials are required before relatively high intakes of n-3 fatty acids (1–2 g/day) can be strongly recommended for either primary or secondary prevention.

e. Hormone replacement therapy (HRT)

Risk for CHD is increased in postmenopausal women whether the menopause is natural, surgical, or premature (Kannel et al., 1976; Rosenberg et al., 1981; Colditz et al., 1987). Loss of estrogen has been proposed as a cause for increased risk. This putative mechanism was strengthened by results of numerous case-control and epidemiological studies which suggested that either estrogen alone, or in combination with progestin, reduces risk for CHD in primary and secondary prevention. However, benefit of estrogen replacement was not confirmed in a secondary prevention trial, the Heart and Estrogen/progestin Replacement Study (HERS) (Hulley et al., 1998). A subsequent angiographic study also revealed no apparent benefit from HRT (Herrington et al., 2000). The major features of the HERS trial are shown in Table VI.2–5.

Table VI.2–5. Major Characteristics and Outcomes of HERS Trial

Patient Characteristics	Study Design	Clinical Outcomes (E+P vs. Placebo)	Side Effects
2,763 postmenopausal women	Randomized, double-blind	CHD events 172 vs. 176	Thromboembolic events (E+P $\geq$ placebo)
Age <80 years (mean age 67 years)	Placebo vs. 0.625 mg of conjugated equine estrogens and 2.5 mg medroxyprogesterone acetate (E+P)	CHD death 71 vs. 58	Gallbladder disease (E+P $\geq$ placebo)
History of CHD	Duration: 4.1 years	Non-fatal MI 116 vs. 129	
Absent hysterectomy			
BMI >27 kg/m^2			
45% on lipid-lowering drugs at entry			

As shown in the table, estrogen/progestin replacement produced no overall benefit for the entire duration of the trial. Moreover, both CHD death and non-fatal myocardial infarction were increased, especially during the first year. Estrogen/progestin (E+P) replacement increased risk for thromboembolic events and caused more gallbladder disease (Hulley et al., 1998; Grady et al., 2000). Thus, E+P produced no overall benefit for the entire study and increased risk for CHD events, thromboembolic events, and gallbladder disease in the early phase of the trial. There was a suggestion, however, that E+P reduced non-fatal myocardial infarction in the latter

years of the trial. A 3-year followup study is currently in progress. The overall interpretation of the trial by the investigators was that HRT should not be initiated in postmenopausal women with CHD for the purpose of reducing risk of CHD, but if women had already been on HRT for a period of time, they could continue, with the expectation that there may be some later benefit. The mechanism for the early increase in CHD events and increased thromboembolic events has not been clearly defined, but it appears that E+P administration was associated with a prothrombotic tendency.

Estrogen therapy favorably influences lipid and lipoprotein levels, but this did not translate into a reduction in CHD risk in the HERS trial. In postmenopausal women, orally administered estrogen preparations (0.625 mg of conjugated estrogen or 2 mg of micronized estradiol) reduce LDL-cholesterol levels by 10–15 percent and increase HDL-cholesterol levels up to 15 percent (Cauley et al., 1983; Jensen et al., 1986; Granfone et al., 1992). Co-administration of progestin may decrease the HDL-cholesterol-raising effect of estrogen. In the HERS trial, the mean difference between E+P minus placebo was an 11 percent decrease in LDL cholesterol, a 10 percent increase in HDL cholesterol and an 8 percent increase in triglycerides.

There is no definitive explanation for why the epidemiologic/observational studies provided markedly different results from the HERS trial. The HERS trial clearly demonstrates the need for controlled clinical trials. Some investigators postulate that if lower doses of estrogen, different progestins, younger age group, estrogen only, or women without CHD had been employed, the results may have been different. The NHLBI Women's Health Initiative is utilizing the same hormonal preparation in a wide range of ages in an estrogen-only and in an estrogen/progestin group in women without CHD (Women's Health Initiative Study Group 1998). This trial may answer some of the questions, but the results will probably not be available before 2003. There is also a possibility of an increased risk of breast cancer with prolonged HRT (Colditz et al., 1993; Steinberg et al., 1994; Barrett-Connor and Grady, 1998; Torgerson 2000; Collaborative Group on Hormonal Factors in Breast Cancer 1997).

Evidence statements: *Hormone replacement therapy in postmenopausal women does not reduce risk for major CHD events or coronary deaths in secondary prevention (A2). Moreover, hormone replacement therapy carries an increased risk for thromboembolism and gallbladder disease (A2).*
Recommendation: *Hormonal replacement therapy cannot be recommended for the express purpose of preventing CHD. Instead, control of risk factors should be the primary approach to reducing CHD risk in women. There may be other valid reasons for hormonal replacement therapy, such as for management of perimenopausal and postmenopausal symptoms or for treatment or prevention of osteoporosis.*

1) Selective estrogen receptor modulators (SERM)—Raloxifene

A number of SERMs are under development. Raloxifene imparts benefits similar to those of HRT on bone density in postmenopausal women. Raloxifene also has an LDL-cholesterol-lowering effect similar to that of estrogen, but the HDL-raising effect appears to be less (Walsh

et al., 1998). Clinical trials to evaluate its effect on CHD risk are underway. Again, until controlled clinical trials are available that demonstrate a reduction in CHD risk, this class of drugs should not be considered for the purpose of CHD prevention. SERMs also increase the risk of thromboembolic events.

f. Miscellaneous drugs and therapeutic approaches

1) Investigational drugs

Many new cholesterol-lowering drugs with a wide range of mechanistic actions are currently in various phases of development. It is still too early to predict which drugs will be approved by the FDA and what their long-term toxicities may be. They will also have the near-term disadvantage of lacking clinical trials documenting a reduction in CHD clinical events.

2) Other approaches

With the advent of statins, effective control of LDL-cholesterol levels can now be achieved in the majority of persons with either monotherapy or drug combinations. Persons with severe forms of hypercholesterolemia or other hyperlipidemias who cannot be adequately controlled should be referred to a center specializing in lipid disorders. LDL apheresis is now available for persons with very high LDL levels, but the procedure is costly and time-consuming. The FDA recently approved two commercial techniques for this purpose: (1) a heparin-induced extracorporeal lipoprotein precipitation, and (2) a dextran sulfate cellulose adsorbent for removal of lipoproteins.

3. Selection of drugs for elevated LDL cholesterol

Reduction in serum concentrations of LDL cholesterol is the primary approach to lowering the risk of CHD in both primary and secondary prevention. In persons whose triglycerides are elevated along with LDL cholesterol, it may also be desirable to lower triglycerides and increase HDL-cholesterol concentrations. Several factors influence the selection of initial drug therapy in individual persons. These include the lipoprotein profile and magnitude of change needed to attain goals of therapy, concurrent drug therapies that may increase the risk of side effects with specific drugs, and the presence of other medical disorders that may influence drug metabolism or be adversely influenced by a specific hypolipidemic drug.

Statins are the most effective class of drugs for reducing LDL-cholesterol concentrations: they are well tolerated, easy to administer, and they are usually the first drugs used. Five statins (lovastatin, pravastatin, simvastatin, fluvastatin, and atorvastatin) are approved for clinical use in the United States[*]. Available statins differ somewhat in the degree of LDL-cholesterol lowering that can be achieved per mg dose. In addition, the metabolic clearance of these drugs also vary. Simvastatin and lovastatins undergo metabolic inactivation by the 3A4 isozyme of cytochrome p-450 (CYP 3A4); atorvastatin is also a substrate for CYP 3Y4, though some of its metabolites

[*] *Cerivastatin was withdrawn from the market by the manufacturer in August, 2001.*

remain active; and fluvastatin is metabolized by CYP 2C9. Pravastatin appears not to be metabolized by the p-450 system. These differences can have implications for drug-drug interactions, particularly where the concern is myopathy related to elevated systemic levels of the statin. Statins vary in the dose required to produce a given degree of LDL lowering. Whether different doses that produce the same degree of LDL lowering differ in side effect profiles is unknown because of a lack of direct comparison studies. For all statins, the incidence of side effects increases with higher doses. The degree of LDL lowering that is required to achieve target goals and the percent of LDL lowering that is seen with the usual starting dose and maximum dose of the statins are illustrated in Table VI.3–1. In general, for every doubling of the dose of a statin, LDL levels fall by approximately 6 percent.

The dose of statin required to achieve target goals can be extrapolated from Table VI.3–1. However, the response of an individual may vary considerably and cannot be predicted. The LDL response may be influenced by a number of factors, including diet and drug compliance, the genetic cause of hypercholesterolemia, gender and hormonal status, apoE phenotype, and differences in drug absorption and metabolism. There is a tendency in current clinical practice to initiate therapy with the usual starting dose, but the dose often is not titrated upwards to achieve target goals. Persons requiring large LDL reductions will never achieve target goals with the starting dose of some statins. Since the absolute incidence rates of side effects are not much greater at higher doses of currently available preparations, persons requiring major LDL-cholesterol lowering should be started on doses (or their equivalents) used in most clinical trials. Doses can then be increased as needed to achieve the recommended LDL goal. Alternatively, a second LDL-lowering drug (e.g., bile acid sequestrant or nicotinic acid) can be added to standard doses of statin.

The bile acid sequestrants are the second most effective class of drugs for lowering LDL-cholesterol levels. They are particularly useful in combination with statins to achieve major reductions in LDL-cholesterol levels. They can either be added to a statin when maximal doses of statin have not achieved target goals, or they can be added to lower doses of statin if there are concerns about the tolerability and side effects of higher doses. Cholestyramine (8–16 g/day) or colestipol (10–20 g/day) usually produce 10–20 percent reductions in LDL cholesterol when administered as monotherapy, and colesevelam lowers LDL cholesterol by 12–18 percent. Similar reductions in LDL cholesterol are noted when the sequestrants are added to low doses of statins, but the additional LDL-cholesterol lowering is less when added to statins given at higher doses. For purposes of drug safety, bile acid sequestrants can be considered as monotherapy in younger persons, women considering pregnancy, and when only modest LDL lowering is needed.

The LDL-cholesterol-lowering effects of nicotinic acid are usually modest and can be quite variable. Reductions in LDL of 5–23 percent have been noted with doses of 1.5 to 4.5 g of crystalline nicotinic acid and 10–20 percent at 2.0 to 3.0 g of Niaspan® (Capuzzi et al., 1998; Guyton et al., 2000; Goldberg et al., 2000; Morgan et al., 1996). Nicotinic acid should be considered if additional LDL-cholesterol lowering is required after statin administration, especially in persons who do not tolerate sequestrants or who prefer to take medication in tablet form. Nicotinic acid is also considered if, in addition to LDL-cholesterol lowering, increases in HDL cholesterol and decreases in triglycerides and Lp(a) are needed.

The fibrates usually do not significantly enhance LDL-cholesterol lowering when added to a statin. However, if a patient is not at LDL target level and has not tolerated a bile acid sequestrant or nicotinic acid, addition of fenofibrate may enhance LDL lowering in some patients (Kiortisis et al., 2000); it may also be useful if the patient has concomitant atherogenic dyslipidemia (Ellen and McPherson, 1998).

Table VI.3–1. Achieving Target LDL-Cholesterol (LDL-C) Goals

Baseline LDL-C	130	160	190	220
(Percent Reduction to Achieve Target Goals)				
Target LDL-C <100	23	38	47	55
Target LDL-C <130	—	19	32	41
Target LDL-C <160	—	—	16	27

Average Percent Reduction in LDL Cholesterol With Usual Starting Dose and Maximal Statin Dose*

		Starting Dose	Maximum Dose
Lovastatin	20, 80 mg	24	40†
Pravastatin	20, 40 mg	24	34†
Simvastatin	20, 80 mg	35	46
Fluvastatin	20, 80 mg	18	31
Atorvastatin	10, 80 mg	37	57

* Maximum dose currently approved by the FDA.

† Administered in divided doses.

The use of drugs for treatment of other forms of dyslipidemia (severe hypercholesterolemias, isolated low HDL, hypertriglyceridemias, diabetic dyslipidemia, and other secondary forms of hyperlipidemia) are considered in Section VII.

a. Practical advice on combined drug therapy

Some persons will require combined drug therapy to reach ATP III treatment goals. Combination therapy may be needed to provide additional reduction of LDL cholesterol, to achieve the goal for non-HDL cholesterol, to treat severe hypertriglyceridemia, and if it seems advisable, to raise HDL-cholesterol levels. Although it seems desirable to improve the overall lipoprotein profile with combined drug therapy, major randomized controlled trials have not been carried out to test for efficacy and safety in large numbers of persons. Nonetheless, several smaller trials and angiographic trials have provided evidence of positive benefit from combined drug therapy.

1) Statin—bile acid sequestrant combination

In the majority of persons who are treated with a statin, the LDL-cholesterol goal can be reached. However, in persons with severe polygenic or familial hypercholesterolemia, a statin alone may

not be enough. In these cases, combination therapy with a bile acid sequestrant or nicotinic acid added to the statin, or a sequestrant-nicotinic acid combination, should be considered for additional LDL-cholesterol lowering. Of these, the statin-sequestrant combination may be the most effective, reducing LDL cholesterol by as much as 70 percent. The alternative combinations are generally less effective.

Following are practical considerations when utilizing statins and sequestrants in combination.

- The dose of the sequestrant in the statin-sequestrant combination can be low or moderate. Higher doses do not appear to add signficiantly to LDL-cholesterol-lowering efficacy (Leren et al., 1988; Sprecher et al., 1994; Pan et al., 1990).
- Since the statin-sequestrant combination may more effectively lower LDL than a maximum dose of statin, consideration should be given to use of a combination approach early in the course of treating persons with very high LDL-cholesterol levels (Pan et al., 1990; Denke and Grundy, 1995).
- The LDL-cholesterol lowering achieved with the statin-sequestrant combination appears to have a ceiling beyond which there is little if any additional LDL lowering even if the statin or sequestrant doses are further increased. In these cases, consideration can be given to adding a third agent, such as nicotinic acid. Bile acid sequestrants will reduce the bioavailability, but not the LDL-lowering action, of the statin when administered together. Thus, the drugs may be given together. However, it is probably best to give the statin at night (bedtime) and the sequestrant with each meal. It is not necessary to separate the time of administration of colesevelam and statins.
- If the statin-sequestrant combination is not successful in achieving the LDL-cholesterol goal, addition of nicotinic acid to the combination can be considered (Brown et al., 1997). Studies have shown that the use of Niaspan® provides equivalent effect on lipid parameters and is better tolerated than immediate release of nicotinic acid (Rader et al., 1992).

2) Statin—fibrate combination therapy

The combination of statins and fibrates has proven to be highly effective for improvement of the lipoprotein profile in patients with combined hyperlipidemia (East et al., 1988; Athyros et al., 1997; Yeshrun et al., 1993; Ellen and McPherson, 1998). It also may be useful for patients with elevated LDL cholesterol and atherogenic dyslipidemia. A statin + fibrate can reduce both LDL cholesterol and VLDL cholesterol (i.e., non-HDL cholesterol) in patients with elevated triglycerides. Since the primary aim of cholesterol management is LDL reduction, statin therapy usually will be introduced before fibrates. In some patients with high triglycerides, both LDL and non-HDL goals can be attained with higher doses of statins. However, an alternative approach is to use a statin + fibrate. To date no clinical trials have been carried out in patients with hypertriglyceridemia to document the relative value of these two approaches.

The major concern about this combination is the potential for occurrence of myopathy. In the past, this combination was widely thought to be “contraindicated” because of the potential danger of myopathy. More recently, statin-fibrate combination therapy has been used with apparent safety in the majority of persons. It should be noted that the specific combination of

cerivastatin and gemfibrozil caused more clinical myopathy than is noted with other statin drugs. This is one factor that led to the voluntary withdrawl of cerivastatin from the market. Several key points must be kept in mind when using statin-fibrate combination therapy.

- Ensure that the patient has normal renal function.
- Ensure that there are no potential drug interactions that could increase the systemic blood levels of either the statin or fibrate.
- Limit the initial dose of the statin to a starting or intermediate dose when combining it with a fibrate. The dose of statin can then be increased cautiously.
- Teach the patient to recognize and report symptoms of muscle soreness, tenderness, and pain.
- Obtain a creatine kinase (CK) blood level prior to beginning combination therapy to document the patient's baseline level. Repeat this measurement if the patient reports muscle symptoms suggestive of myopathy.
- If the patient experiences muscle soreness, tenderness, or pain, with or without CK elevations, rule out common causes such as exercise or strenuous work. Advise moderation in activity for persons who experience this finding during combination therapy.
- Discontinue combination therapy if a CK greater than ten times the upper limit of normal (ULN) is encountered in a patient with muscle soreness, tenderness, or pain. Wait for symptoms to vanish and CK levels to return to normal before reinitiating therapy with either drug and use a lower dose of the drug(s).

If the patient experiences muscle soreness, tenderness, or pain with either no CK elevation or a moderate elevation (i.e., between three and ten times the upper limit of normal), monitor the patient's symptoms and CK levels until symptoms resolve and the CK returns to normal or until the clinical situation worsens to the point described above, mandating discontinuation of therapy. Following are summary comments reflecting current experience with these issues.

- Although not consistent in the literature, the general terminology used to describe muscle toxicity with these agents includes *myalgia* to reflect muscle symptoms without CK elevations, *myositis* for increased CK levels without muscle symptoms, and *myopathy* for muscle symptoms with CK elevations. Severe myopathy (*rhabdomyolysis*) may subsequently occur. Technically, all of these terms fall under the category of *myopathy.*
- Statin therapy appears to carry a small but definite risk of myopathy when used alone. According to several large databases, the incidence of myopathy is reported to be 0.08 percent with lovastatin and simvastatin (Bradford et al., 1991; Hunninghake 1990; Boccuzzi et al., 1991). Elevations of CK greater than ten times the ULN have been reported in 0.09 percent of persons treated with pravastatin. All currently marketed statins appear to have a similar potential for causing this adverse effect.
- Fibrate treatment alone appears to be associated with some risk of muscle toxicity, although probably less than that of statins.
- Of the nearly 600 persons who have participated in controlled clinical trials of a statin and fibrate combination, 1 percent have experienced a CK greater than three times ULN

without muscle symptoms and 1 percent have been withdrawn from therapy because of muscle pain (Shepherd 1995; Ellen and McPherson, 1998; Rosenson and Frauenheim, 1994; Murdock et al., 1999; Iliadis and Rosenson, 1999; Zambon et al., 1999; Napoli et al., 1997; Farnier and Dejager, 2000). None of these events were considered serious. No cases of rhabdomyolysis or myoglobinuria have been encountered in these clinical trials. The experience in these trials is predominantly with lovastatin and gemfibrozil. Other statin-fibrate combinations may well give similar results. A prior report from FDA surveillance of a 30 percent incidence of myopathy associated with a statin-fibrate combination and a 5 percent incidence of myopathy associated with a statin-nicotinic acid combination appears to be a gross overestimate of the problem (Pierce et al., 1990).

3) Statin—nicotinic acid combination therapy

This combination is attractive because of the favorable effects of nicotinic acid on atherogenic dyslipidemia. Combining the powerful LDL-lowering action of statins with the triglyceride-lowering and HDL-raising actions of nicotinic acid offers the potential to correct most forms of complex dyslipidemias. The relative inexpensiveness of nicotinic acid also makes for an attractive combination. Several small-scale clinical trials speak to the efficacy of this combination for modifying an abnormal lipoprotein pattern and even for favorably affecting coronary outcomes (Brown et al., 1990). The disadvantages of the combination lie mainly in the side effect profile of nicotinic acid. There is little evidence that the combination is synergistic in producing side effects. Whether the statin-nicotinic acid combination increases the risk for myopathy is uncertain. Some investigators have found that combining relatively small doses of nicotinic acid with a statin produces an improvement in the lipoprotein profile comparable to that obtained with a statin-fibrate combination, and probably with a lower risk for myopathy (Davignon et al., 1994). This potential advantage however may be offset by the inability of some persons to tolerate the side effects of nicotinic acid.

4) Fibrate—nicotinic acid combination therapy

This combination has not been studied extensively, but it is attractive for atherogenic dyslipidemia. In the Stockholm Ischaemic Heart Disease study, a fibrate (clofibrate) + nicotinic acid significantly reduced CHD events in persons with established CHD (Carlson and Rosenhamer, 1988). Otherwise, it is largely untried.

4. Initiation, monitoring and followup of drug treatment

a. Initiation of LDL-lowering drug therapy

Consideration should be given to starting statin therapy for LDL reduction simultaneously with TLC in persons with CHD or a CHD equivalent who have LDL $\geq$130 mg/dL (see previous discussion on drug options when LDL-cholesterol levels are in the range of 100–129 mg/dL). Initiation of drug therapy seems especially advisable when the patient is hospitalized for an acute coronary event or intervention. When therapy is begun in this setting, persons have demonstrated a very high adherence rate, presumably because of the associated importance of the treatment in

preventing recurring events. Early initiation of statin therapy also takes advantage of effects of LDL lowering on endothelial function and plaque stabilization.

Consideration may also be given to starting statin therapy simultaneously with TLC in primary prevention persons who have marked hypercholesterolemia, where it is clear that diet alone will not reduce the patient's LDL cholesterol to goal.

In all other persons, a period of lifestyle modification should precede initiation of drug therapy. This period should be long enough for persons to integrate TLC into their routine and for the effects of this intervention to be manifest. Generally, no more than 3 months is required.

b. Baseline measurements

Prior to initiating drug therapy, baseline lipid and lipoprotein measurements that will be used to follow the drug's efficacy and safety should be documented. Except for acute hospitalization, the initial lipoprotein profile upon which treatment decisions are based should be the average of two measurements done one to four weeks apart while the patient is consistently following a low-fat diet. Baseline measurements also include liver function tests (i.e., ALT or AST), CK and appropriate medical history. Table VI.4–1 lists selected baseline and followup measures for other lipid-modifying drug therapy.

Table VI.4–1. Monitoring Parameters and Followup Schedule

Drug	Monitoring Parameters	Followup Schedule
Bile Acid Sequestrants	Indigestion, bloating, constipation, abdominal pain, flatulence, nausea	Evaluate symptoms initially, and at each followup visit. Also check time of administration with other drugs.
Nicotinic acid	Flushing, itching, tingling, headache, nausea, gas, heartburn, fatigue, rash	Evaluate symptoms initially, and at each followup visit.
	Peptic ulcer	Evaluate symptoms initially, then as needed.
	Fasting blood sugar (FBS) Uric acid	Obtain an FBS and uric acid initially, 6–8 weeks after starting therapy, then annually or more frequently if indicated to monitor for hyperglycemia and hyperuricemia.
	ALT and AST	Obtain an ALT/AST initially, 6–8 weeks after reaching a daily dose of 1,500 mg, 6–8 weeks after reaching the maximum daily dose, then annually or more frequently if indicated.
Statins	Muscle soreness, tenderness or pain	Evaluate muscle symptoms and CK initially. Evaluate muscle symptoms at each followup visit. Obtain a CK when persons have muscle soreness, tenderness, or pain.
	ALT, AST	Evaluate ALT/AST initially, approximately 12 weeks after starting, then annually or more frequently if indicated.
Fibrates	Abdominal pain, dyspepsia, headache, drowsiness	Evaluate symptoms initially, and at each followup visit.
	Cholelithiasis	Evaluate history and symptoms initially, and then as needed.

c. Interval of follow up

With good adherence, maximum LDL lowering, as well as lowering of triglyceride and raising of HDL cholesterol, is achieved within 6 weeks of initiating drug therapy. Thus, the first followup visit should occur 6–8 weeks after initiating drug therapy. In the case of nicotinic acid, where doses must be titrated by the patient to a therapeutic level, the first followup visit should occur 6–8 weeks after the patient has reached the initial targeted dose, generally 1,000–1,500 mg daily. If the dose is increased, monitoring should be continued at 6–8 weeks until the final dose is determined.

If the initial dose of the drug must be increased or another drug added in an effort to reach the treatment goal(s), the patient should be seen in another 6–8 weeks for followup evaluation of the new drug regimen. This process should be repeated until the patient has reached his/her treatment goal(s).

Once the patient has achieved the treatment goal(s), followup intervals may be reduced to every 4–6 months. The primary focus of these visits is encouragement of long-term adherence with

therapy. Lipoprotein profiles should be assessed at least annually, and preferably at each clinic visit to promote compliance.

d. Followup treatment decisions

Followup visits are used to enhance adherence and to determine whether persons have achieved their treatment goal(s). If they have not, changes in the drug regimen should be made to attempt to reach these goals. In most cases, LDL goals can be achieved by titrating doses of the statin or bile acid sequestrant upward to the maximum recommended dose. This may be done systematically one step at a time. For example, the dose of a statin may be doubled at each visit to achieve an additional 6–7 percent LDL lowering with each dose titration. However, when the difference between the patient's on-treatment LDL cholesterol and his/her goal is great, consideration may be given to making larger changes in the drug dose. Alternatively, another LDL-lowering drug may be added (e.g., adding a bile acid sequestrant to a statin), as described above. If the decision is made to replace a less efficacious statin with a more efficacious one to achieve the LDL goal, one statin may be discontinued and the new statin started the next day. A dose titration scheme for commonly used lipid-modifying drugs is presented in Table VI.4–2.

If a patient has high triglycerides (≥200 mg/dL) the non-HDL-cholesterol goal should be addressed. If the patient was earlier treated with a statin to achieve the LDL goal, increasing its dose beyond that used to reach the LDL goal may assist in reaching the non-HDL-cholesterol goal. In many instances, however, reaching the non-HDL-cholesterol goal will require the addition of a triglyceride-lowering drug such as nicotinic acid or a fibrate to the LDL-lowering drug. Clinical experience suggests that if nicotinic acid is selected, the immediate release and polygel sustained-release dosage form (Niaspan®) should be titrated to 1,000–1,500 mg daily by the patient before a followup assessment visit is scheduled. If needed, immediate release nicotinic acid may be further titrated to 3,000 mg daily. If a fibrate is selected, dose titrations are not needed as the initial dose is also the maximum dose. Followup visits for these assessments may also be scheduled 6–8 weeks apart.

VII. Management of Specific Dyslipidemias

Randomized clinical trials generally have not focused on specific dyslipidemias. Yet these disorders are common enough to deserve specific attention in ATP III. In this section, the major dyslipidemias will be reviewed. Recommendations for their management are derived from the considered judgment of the ATP III panel. Recommendations are based in part on the sizable body of literature that describes changes in serum lipid and lipoprotein levels produced by dietary and drug therapies. In some dyslipidemias, combined drug therapy is required to obtain optimal lipoprotein profiles. In general, improvements in lipoprotein profiles rather than favorable clinical outcomes are the end points that serve as the basis for recommendations. These recommendations are made with the recognition that some induced changes in the lipoprotein profile have not been proven through clinical trial to reduce risk for CHD. Instead, they generally represent a synthesis of several lines of indirect evidence.

1. Very high LDL cholesterol

Severe forms of elevated LDL cholesterol are defined as those in which LDL concentrations are persistently ≥190 mg/dL after TLC. Most elevations of this degree have a strong genetic component. Table VII.1–1 identifies three familial forms of elevated LDL cholesterol, i.e., familial hypercholesterolemia (heterozygous and homozygous forms), familial defective apolipoprotein B-100, and polygenic hypercholesterolemia. Clinical features, clinical outcomes, and therapeutic considerations are listed in the table and are discussed in more detail below.

Table VII.1–1. Familial Disorders That Cause Very High LDL-Cholesterol Levels (≥190 mg/dL)

Clinical Condition	Clinical Features and Clinical Outcomes	Therapeutic Considerations
Heterozygous familial hypercholesterolemia (FH)	• Due to mutated LDL receptor (half normal-expression) • Prevalence: 1/500 in United States • LDL-C levels: twice normal (e.g., 190–350 mg/dL) • Tendon xanthomas common • Premature CHD common – 30–40's in men – 40–50's in women	• Begin LDL-lowering drugs in young adulthood • TLC: all persons • Statins: first line of therapy (start dietary therapy simultaneously) • BAS* (if necessary in combination with statins) • If needed, consider triple-drug therapy (statins + BAS + nicotinic acid)
Homozygous familial hypercholesterolemia (FH)	• Due to two mutated LDL receptors • Prevalence: 1/1,000,000 in United States • LDL-C levels: 4-fold increase (e.g., 400–1000 mg/dL) • Xanthomas: tendinous, tuberous, dermal • Widespread, severe athero-sclerosis (multiple arterial beds affected) • Very severe clinical athero-sclerotic disease • Aortic valve disease	• Dietary therapy not effective • BAS not effective • Nicotinic acid mildly effective • Statins may be moderately effective in some persons • Ileal exclusion operation not effective • Liver transplant effective, but impractical • LDL-pheresis currently employed therapy (in some persons, statin therapy may slow down rebound hypercholesterolemia)
Familial defective apolipoprotein B-100 (FDB)	• Due to mutated apo B-100 (position 3500 A→G) • Prevalence 1/700–1000 • LDL-C levels: 1.5–2-fold increase (e.g., 160–300 mg/dL) • Xanthomas: tendon • Premature CHD – CHD 40–65yr common in men – Uncertain in women	• TLC indicated • All LDL-lowering drugs are effective • Combined drug therapy required less often than in heterozygous FH
Polygenic hypercholesterolemia	• Due to multiple gene polymorphisms (often combined with dietary excesses) • Prevalence: 1/10–20 (depending on age) • LDL-C: ≥190 mg/dL • Prevalence of CHD: 3–4-fold increase (above average)	• TLC indicated (all persons) • Consider for drug therapy (if LDL-C ≥190 mg/dL after dietary therapy [all persons]) • All LDL-lowering drugs are effective • If necessary to reach LDL-C goals, consider combined drug therapy

* BAS=bile acid sequestrants.

a. Familial hypercholesterolemia (FH)

Heterozygous familial hypercholesterolemia. This autosomal-dominant disorder occurs in 1 of every 500 people (Goldstein and Brown, 1995). The defect is a mutation in the gene for the LDL receptor (Brown and Goldstein, 1986); a large number of mutations affecting LDL receptor function has been reported (Hobbs et al., 1990; Hobbs et al., 1992). In all of these, half the normal number of receptors are expressed. Hypercholesterolemia often is detectable at birth or shortly thereafter, and total cholesterol levels eventually rise to 350 to 500 mg/dL in many persons. Tendon xanthomas, especially in the Achilles tendons and the extensor tendons of the hands, are typical. FH carries increased risk of premature CHD; CHD commonly occurs in men by the fourth or fifth decade, and about 10 years later in women. Treatment for FH heterozygotes should begin with TLC, but drug therapy is generally required as well. For adults with heterozygous FH, LDL-lowering drugs should be initiated as soon as it is recognized that the LDL-cholesterol goal cannot be achieved with TLC alone. Persons with milder forms of heterozygous FH may respond sufficiently to therapy with a bile acid sequestrant or a statin. More severe cases require two-drug therapy (e.g., statin plus bile acid sequestrant) (Mabuchi et al., 1983; Bilheimer et al., 1983) or even triple-drug therapy (statin plus bile acid sequestrant plus nicotinic acid) (Malloy et al., 1987; Kane et al., 1990). Because of the high risk of premature CHD accompanying heterozygous FH, drug therapy is cost effective.

Homozygous familial hypercholesterolemia occurs in only 1 in 1 million persons (Goldstein and Brown, 1995). LDL-receptor activity is essentially absent, and total cholesterol levels commonly run between 700 and 1,200 mg/dL. Cutaneous xanthomas form at various sites within the first few months or years of life, whereas tendon and tuberous xanthomas develop later. Atherosclerosis is severe and widespread, affecting coronary, carotid, iliac, and femoral arteries, and the aortic root. Treating FH homozygotes is difficult because the persons express little or no LDL-receptor activity and therefore are resistant to the effects of therapeutic diets and most cholesterol-lowering medications. High doses of statins may produce some cholesterol reduction in a few FH homozygotes, as does nicotinic acid. In the past, various surgical procedures have been tested. Ileal bypass surgery is not effective. Portacaval shunt surgery only modestly lowers LDL levels (Starzl et al., 1978; Bilheimer et al., 1975; Bilheimer 1989). Liver transplantation provides new LDL receptors that dramatically reduce LDL-cholesterol levels (Bilheimer 1989); further, responsiveness to LDL-lowering drugs returns. However transplantation requires continuous immunosuppression and is not a practical approach. Current accepted therapy consists of modified forms of plasmapheresis that selectively remove VLDL and LDL from the plasma. Early studies laid the foundation for this approach (Thompson and Myant, 1980; King et al., 1980; Eisenhauer et al., 1986; Homma et al., 1986; Mabuchi et al., 1986). The FDA has more recently approved commercial techniques for this purpose: (a) heparin-induced extracorporeal lipoprotein precipitation, and (b) a dextran sulfate cellulose absorbent. Such treatment must be performed every 1 to 3 weeks, depending on the clinical state of the patient, in order to promote xanthoma regression and retard atheroma formation.

b. Familial defective apolipoprotein B-100 (FDB)

FDB is an autosomal dominant abnormality that causes elevated LDL cholesterol (Vega and Grundy, 1986; Soria et al., 1989; Innerarity et al., 1987; Innerarity et al., 1990). It results from a

single nucleotide mutation that substitutes glutamine for arginine at amino acid position 3,500 in apolipoprotein B. This mutation reduces affinity of LDL particles for the LDL receptor; consequently, the LDL of affected individuals is cleared from plasma more slowly than normal. FDB prevalence varies among different populations. In the United States it occurs in about 1 in 700–1000 people (Innerarity et al., 1990). Serum LDL levels are often similar to those described for persons with heterozygous FH. Affected individuals can manifest premature atherosclerosis and tendon xanthomas. However, other affected individuals have a more moderate form of hypercholesterolemia, indistinguishable from polygenic hypercholesterolemia (see below). The diagnosis requires molecular screening techniques available only in specialized laboratories. Treatment is similar to that of heterozygous FH; however, less intensive intervention may achieve the goals of therapy (Raal et al., 1997).

c. Polygenic hypercholesterolemia

LDL-cholesterol levels ≥190 mg/dL characterize polygenic hypercholesterolemia. No unique genetic defect is responsible; rather the high LDL-cholesterol level is explained by a complex interaction of environmental and genetic factors. A variety of patterns of LDL metabolism have been reported (Vega et al., 1991). The disorder is associated with increased risk for premature CHD. In polygenic hypercholesterolemia, the elevation in plasma cholesterol is generally milder than in heterozygous FH, and tendon xanthomas are not observed. Only about 7 percent of the first-degree relatives of persons with polygenic hypercholesterolemia have high LDL-cholesterol levels. Treatment of polygenic hypercholesterolemia is essentially identical to that given for heterozygous FH, although drugs in combination are required in fewer cases.

2. Elevated triglycerides

a. Classification, causation, and clinical significance

1) Classification of serum triglycerides

Because of the growing evidence for a strong association between elevated triglycerides and CHD risk, ATP III adopts lower cutpoints for triglyceride abnormalities than did ATP II (National Cholesterol Education Program 1993; 1994) (see Section II.3).

Category	Serum Triglyceride Levels (mg/dL)
Normal triglycerides	Less than 150
Borderline high triglycerides	150 to 199
High triglycerides	200 to 499
Very high triglycerides	≥500

Terminology for triglyceride levels is similar to that used for LDL cholesterol. Borderline high triglycerides (150–199 mg/dL) are a common component of the metabolic syndrome. The same is true for high triglycerides (200–499 mg/dL) except that genetic factors play a more important role. Very high triglycerides (≥500 mg/dL) also have a strong genetic component and are

accompanied by increasing risk for acute pancreatitis. High triglycerides equate to the older definition of type 4 hyperlipoproteinemia, whereas very high triglycerides were called type 5 hyperlipoproteinemia (Fredrickson et al., 1967a-e).

2) Causes of elevated triglycerides

The causes of raised serum levels of triglycerides in each category of elevated triglyceride are listed in Table VII.2–1.

Table VII.2–1. Classification and Causes of Elevated Serum Triglycerides

Classification of Serum Triglycerides	Causes of Elevated Serum Triglycerides
Normal triglycerides (<150 mg/dL)	
Borderline High Triglycerides (150–199 mg/dL)	• Acquired causes – Overweight and obesity – Physical inactivity – Cigarette smoking – Excess alcohol intake – High carbohydrate intake (>60% of total energy) • Secondary causes* • Genetic causes – Various genetic polymorphism
High Triglycerides (200–499 mg/dL)	• Acquired causes – Same as for borderline high triglycerides (usually combined with foregoing causes) • Secondary causes* • Genetic patterns – Familial combined hyperlipidemia – Familial hypertriglyceridemia – Polygenic hypertriglyceridemia – Familial dysbetalipoproteinemia
Very High Triglycerides (≥500 mg/dL)	• Usually combined causes – Same as for high triglycerides • Familial lipoprotein lipase deficiency • Familial apolipoprotein CII deficiency

* Secondary causes of elevated triglycerides: diabetes mellitus (see Diabetic Dyslipidemia), chronic renal failure, nephrotic syndrome, Cushing's disease, lipodystrophy, pregnancy, and various drugs (corticosteroids, beta-blockers, retinoids, oral estrogens [not transcutaneous estrogen], tomoxifen, protease inhibitors for AIDS).

Borderline high triglycerides (150–199 mg/dL). In most persons, borderline high triglycerides derive from acquired factors (Table VII.2–1). Acquired factors include overweight and obesity,

physical inactivity, excess alcohol intake, and in some persons, high-carbohydrate diets. Genetic factors play a lesser role (Heller et al., 1993; Boomsma et al., 1996). It is also important to rule out secondary causes (see footnote Table VII.2–1).

High Triglycerides (200–499 mg/dL). Generally, genetic and acquired factors combine to produce high serum triglycerides. Many persons with high triglycerides manifest insulin resistance and the metabolic syndrome. Abdominal obesity is especially common among those with high triglycerides (Bodkin et al., 1993; Julien et al., 1997). With high triglycerides, genetic factors play an increasingly predominant role (Assmann and Brewer, 1991; Humphries et al., 1994; Galton 1995). Patterns of dyslipidemia have been found to cluster in some families, suggesting a strong genetic component. Three patterns for family clustering of elevated triglycerides have been identified; they are called *familial combined hyperlipidemia, familial hypertriglyceridemia,* and *familial dysbetalipoproteinemia.* Each pattern is reviewed briefly.

In *familial combined hyperlipidemia*, affected persons and their first-degree relatives may at various times manifest high serum cholesterol, high triglycerides, or both (Goldstein et al., 1973a,b; Hazzard et al., 1973). Whether the underlying defect is monogenic or polygenic is not known. Metabolic studies suggest that the liver overproduces VLDL, but other metabolic defects may be present (Chait et al., 1980; Beil et al., 1982b; Venkatesan et al., 1993). Many persons exhibit high levels of apo B-100 (hyperapobetalipoproteinemia) (Teng et al., 1986; Kwiterovich et al., 1987; Austin et al., 1992). There are no specific clinical features to diagnose this disorder. When total cholesterol is high, the level is typically in the range of 250 to 350 mg/dL. Triglyceride levels vary considerably, but about two-thirds of the persons have levels in the range of 200 to 500 mg/dL. Hyperlipidemia may or may not be present in childhood. Familial combined hyperlipidemia is associated with increased risk for premature CHD. In an early study, about 10 percent of persons with early onset myocardial infarction fell in the category of this disorder (Goldstein et al., 1973a,b; Hazzard et al., 1973).

Family clustering of elevated triglycerides without increased serum cholesterol levels characterizes *familial hypertriglyceridemia* (Goldstein et al., 1973a,b; Hazzard et al., 1973). Persons with familial hypertriglyceridemia seemingly do not carry as high a risk for premature CHD as do those with familial combined hyperlipidemia (Brunzell et al., 1976; Austin et al., 2000). This is not surprising because the former generally have lower levels of LDL cholesterol than the latter. Many persons with familial hypertriglyceridemia also manifest obesity (Dunn et al., 1985), but in some, triglycerides are elevated without obesity or any other evidence of the metabolic syndrome. These latter persons may have a defect in catabolism of TGRLP (e.g., an abnormality in lipoprotein lipase activity) (Wilson et al., 1990; Minnich et al., 1995).

A third category of familial clustering of elevated triglycerides includes those with increased remnant lipoproteins (*familial dysbetalipoproteinemia)* (Mahley and Rall, 1995). This condition also has been named type 3 hyperlipoproteinemia (Fredrickson et al., 1967a-e). The defining defect in this disorder is an isoform variation in apolipoprotein E. Among the three major isoforms, E2, E3, and E4, the one most often associated with dysbetalipoproteinemia is apo E2. Affected persons usually are homozygous for apo E-2. Since apo E mediates binding of VLDL remnants and chylomicron remnants to their hepatic receptors, these remnants accumulate in plasma when the dysfunctional apo E-2 is present. The frequency of apo E-2 homozygosity in

the general population is approximately 1 in 100, but the clinical syndrome of dysbetalipoproteinemia occurs much less frequently. The difference in frequency between the permissive genotype and the clinical syndrome is explained by the requirement for other factors, including age, hypothyroidism, obesity, diabetes mellitus, or the coincident presence of another genetic lipoprotein disorder, such as familial combined hyperlipidemia, to fully express the syndrome. Some persons have palmar xanthomas of the creases of the palms and fingers, but these may progress to nodules several millimeters in size. Tuberoeruptive xanthomas occur and vary from small papules to larger lesions. Premature atherosclerotic disease may present as myocardial infarction, stroke, or peripheral arterial disease. Hyperlipidemia is accentuated by concomitant glucose intolerance, diabetes mellitus, hyperuricemia, hypothyroidism, and obesity. The disorder is not commonly expressed in childhood.

Very high triglycerides (≥500 mg/dL). When serum triglycerides exceed 500 mg/dL, chylomicrons usually begin to appear in fasting plasma. Their presence typically denotes a catabolic defect for TGRLP (Kesaniemi and Grundy, 1984). Most frequently reported are genetic defects in lipoprotein lipase or apo CII. (Santamarina-Fojo 1998). Impaired catabolism of TGRLP also is induced by overproduction of apo CIII, an inhibitor of lipoprotein lipase activity (Aalto-Setala et al., 1996; Ebara et al., 1997; Batal et al., 2000). Excessive production of apo CIII can be a consequence of the insulin-resistance state (Li et al., 1995). Many persons with very high triglycerides have both overproduction and defective catabolism of TGRLP (Kesaniemi and Grundy, 1984). Sometimes very high triglycerides are found in families with familial combined hyperlipidemia or familial hypertriglyceridemia. Although some persons with very high triglycerides remain free from CHD throughout their lives, others develop premature CHD (Steiner et al., 1971; Greenberg et al., 1977). The latter may be due in part to the presence of atherogenic TGRLP, but the metabolic syndrome also is common in these persons. When triglycerides exceed 1000 mg/dL, persons are at risk for acute pancreatitis (Chait and Brunzell, 1992). Because of the danger of acute pancreatitis, persons with severely elevated triglycerides (>2000 mg/dL) should be treated as a medical urgency.

3) Relation of elevated triglycerides to CHD and other conditions

As shown in Table VII.2–2, triglycerides are related to CHD in several ways.

Table VII.2–2. Relationship of Elevated Triglycerides to CHD and Other Conditions

Classification of Serum Triglycerides	Clinical Significance
Normal triglycerides (<150 mg/dL)	
Borderline High Triglycerides (150–199 mg/dL)	• Marker for atherogenic dyslipidemia – Elevated small LDL particles – Low HDL cholesterol • Marker for the metabolic syndrome – Elevated blood pressure – Insulin resistance and glucose intolerance – Prothrombotic state – Proinflammatory state
High Triglycerides (200–499 mg/dL)	• Elevated atherogenic remnant lipoproteins • Marker for other components of atherogenic dyslipidemia (see above) • Marker for the metabolic syndrome (see above)
Very High Triglycerides (≥500 mg/dL)	• Metabolic syndrome, type 2 diabetes, and increased risk for CHD common • Increased risk for acute pancreatitis (risk proportional to triglyceride elevation above 1000 mg/dL) • Chylomicronemia syndrome (triglycerides >2000 mg/dL) – Eruptive skin xanthomas – Hepatic steatosis – Lipemia retinalis – Mental changes – High risk for pancreatitis

Borderline high triglycerides (150–199 mg/dL) are primarily a marker for other atherogenic factors—small LDL particles, low HDL cholesterol, and other components of the metabolic syndrome. High triglycerides (200–499 mg/dL) reflect the presence of atherogenic remnant lipoproteins as well as being a marker for atherogenic dyslipidemia and the metabolic syndrome. When remnants are enriched with cholesterol ester (dysbetalipoproteinemia), CHD risk is particularly high. Finally, some persons with very high triglycerides (≥500 mg/dL) carry other atherogenic factors—increased remnant lipoproteins, atherogenic dyslipidemia and the metabolic syndrome—and hence are at increased risk for CHD. However a more urgent concern in such persons is an increased risk of acute pancreatitis (Chait and Brunzell, 1992). This risk increases in proportion to the rise in triglyceride levels. When triglycerides exceed 2000 mg/dL, persons are subject to the chylomicronemia syndrome (Chait and Brunzell, 1992), which is characterized by eruptive skin xanthomas, lipemia retinalis, mental changes and acute pancreatitis. If very high triglycerides are due exclusively to a catabolic defect of serum triglycerides (e.g., deficiencies of lipoprotein lipase or apo CII), the patient may not be at increased risk for CHD.

b. Therapeutic considerations for persons with elevated triglycerides

1) Non-HDL cholesterol: secondary target for persons with elevated triglycerides

Persons with elevated triglycerides typically have an associated increase in atherogenic VLDL remnants. Higher serum levels of VLDL cholesterol reflect this increase. Since VLDL remnants appear to have atherogenic potential similar to that of LDL, VLDL cholesterol can be added to LDL cholesterol to become a secondary target of therapy. VLDL + LDL cholesterol, termed non-HDL cholesterol, equals total cholesterol minus HDL cholesterol. Relations among the different lipoprotein fractions are as follows:

1) Total cholesterol = LDL + VLDL + HDL

2) Total cholesterol – HDL = LDL + VLDL = non-HDL

A normal VLDL cholesterol can be considered to be a level <30 mg/dL (Heiss et al., 1980). Thus, a therapeutic goal for non-HDL cholesterol can be 30 mg/dL higher than the goal for LDL cholesterol (Table VII.2–3). For persons with borderline high triglycerides (150–199 mg/dL), the VLDL cholesterol is not elevated enough to evoke non-HDL cholesterol as a secondary target. However, non-HDL cholesterol becomes an appropriate secondary target when triglycerides are in the range of 200–499 mg/dL. When triglycerides are very high (≥500 mg/dL), some of the cholesterol in TGRLP may be present in nonatherogenic lipoproteins, e.g., large VLDL and chylomicrons. Moreover, current triglyceride-lowering therapies may not be sufficient to attain non-HDL-cholesterol goals for persons with very high triglycerides. Rather than risk possible side effects of combined therapy with lipid-lowering drugs it may be preferable to allow the non-HDL-cholesterol level to remain above the recommended goal.

Table VII. 2–3. Non-HDL-Cholesterol Goal Corresponding to LDL-Cholesterol Goals

LDL-Cholesterol Goal	Non-HDL-Cholesterol Goal
<160 mg/dL	<190 mg/dL
<130 mg/dL	<160 mg/dL
<100 mg/dL	<130 mg/dL

2) Changes in life habits are primary therapy for elevated triglycerides

Elevated serum triglycerides in the general population are due principally to acquired life habits including overweight and obesity, physical inactivity, excess alcohol intake, cigarette smoking, and in some persons, high-carbohydrate diets. The goal of therapy is to reduce atherogenic VLDL remnants and to mitigate the associated lipid and nonlipid risk factors of the metabolic syndrome. The following changes in life habits are the foundation of therapy for elevated triglycerides:

- Body weight control
- Regular physical activity

- Smoking cessation
- Restriction of alcohol use (in selected persons)
- Avoidance of high-carbohydrate diets

Recommendations for the institution of each of these life-habit changes are discussed in Section V.

3) Special treatment considerations for different triglyceride categories (Table VII.2–4)

Table VII.2–4. Treatment Considerations for Elevated Serum Triglycerides

Serum Triglyceride Category	Special Treatment Considerations
Borderline High Triglycerides (150–199 mg/dL)	• Primary goal: achieve LDL-C goals • Life-habit changes: first-line therapy for borderline high triglycerides – Body weight control – Regular physical activity – Smoking cessation – Restriction of alcohol use (when consumed in excess) – Avoid high carbohydrate intakes (>60% of calories) • Drug therapy: – Triglycerides in this range not a direct target of drug therapy
High Triglycerides (200–500 mg/dL)	• Primary goal: achieve LDL-C goals • Secondary goal: achieve non-HDL-C goal: 30 mg/dL higher than LDL-C goal • First-line therapy for high triglycerides: TLC-emphasize weight reduction and increased physical activity • Second-line therapy: drugs to achieve non-HDL-C goals – Statins: lower both LDL-C and VLDL-C – Fibrates: lower VLDL-triglycerides and VLDL-C – Nicotinic acid: lower VLDL-triglycerides and VLDL-C • Alternate approaches to drug therapy for lowering non-HDL-C – High doses of statins (lowers both LDL-C and HDL-C) – Moderate doses of statins and triglyceride-lowering drug (fibrate or nicotinic acid): **Caution**: increased frequency of myopathy with statins + fibrates
Very High Triglycerides (≥500 mg/dL)	Goals of therapy: • Triglyceride lowering to prevent acute pancreatitis (first priority) • Prevention of CHD (second priority) Triglyceride lowering to prevent pancreatitis: • Very low-fat diet when TG >1000 mg/dL (<15% of total calories as fat) • Medium chain triglycerides when TG >1000 mg/dL (can replace long chain triglycerides in diet) • Institute weight reduction/physical activity • Fish oils (replace some long-chain triglycerides in diet) • Triglyceride-lowering drugs (fibrate or nicotinic acid): most effective • Statins: not first-line agent for very high triglycerides (statins not powerful triglyceride-lowering drugs) • Bile acid sequestrants: contraindicated—tend to raise triglycerides Triglyceride lowering to prevent CHD: • Efficacy of drug therapy to prevent CHD in persons with very high triglycerides not demonstrated by clinical trials

Borderline high triglycerides (150–199 mg/dL). Serum triglycerides in the range of 150–199 mg/dL often indicate adverse life habits, as noted in the previous section. Borderline high triglycerides should alert the physician to the presence of the metabolic syndrome and should signal the need for changes in life habits. When triglycerides are borderline high, LDL cholesterol remains the primary target of treatment and it is not necessary to evoke non-HDL cholesterol as a secondary target of therapy. Drug therapy to specifically reduce VLDL remnants is rarely needed for triglycerides in this range, although statins concomitantly lower LDL and VLDL remnants. Thus the general approach to management of elevated LDL cholesterol need not be modified when triglycerides are borderline high. Nonetheless, some persons with borderline high triglycerides have low HDL cholesterol, which may influence the choice of drugs as described in the previous section. Even so, when drug therapy is needed, LDL-lowering drugs generally take priority. In the presence of low HDL cholesterol, nicotinic acid represents an alternative therapy provided the goals for LDL cholesterol are achieved. Further, as previously noted, fibrate therapy is another option for persons with low HDL cholesterol, low LDL cholesterol, and borderline high triglycerides. The positive outcome with gemfibrozil therapy in the VA-HIT trial in persons with this profile places fibrates on the list of alternatives (Rubins et al., 1999).

High triglycerides (200–499 mg/dL). In persons with high serum triglycerides, LDL cholesterol remains the primary target of therapy. In addition, non-HDL cholesterol becomes a secondary target. Changes in life habits, as outlined before, represent first-line therapy, but it is also important to determine whether a patient is taking drugs known to exacerbate hypertriglyceridemia, and, if so, these should be modified. Among hypolipidemic agents, the statins are the most effective for lowering non-HDL cholesterol. Not only do statins reduce LDL cholesterol, but they also lower VLDL triglycerides and VLDL cholesterol (Stein et al., 1998). For example, in persons with triglyceride levels between 200 and 499 mg/dL, the statins lower triglycerides by 20–40 percent, and VLDL cholesterol is lowered to a similar degree as LDL cholesterol (Vega and Grundy, 1990b). On the other hand, the presence of hypertriglyceridemia of any magnitude is a relative contraindication to bile acid sequestrants when used as monotherapy since these drugs usually promote an increase in triglyceride levels (Crouse 1987).

When LDL-cholesterol levels are not significantly elevated, the goal for non-HDL cholesterol with a triglyceride-lowering drug usually is within reach. Among these, nicotinic acid is usually the most effective; it reduces triglycerides by 30–50 percent usually without causing a reciprocal increase in LDL concentrations (Martin-Jadraque et al., 1996). At the same time, nicotinic acid therapy commonly raises HDL-cholesterol concentrations by 20–30 percent. In persons with contraindications to nicotinic acid or in whom this drug is poorly tolerated, fibric acid derivatives (gemfibrozil 600 mg twice daily, fenofibrate 200 mg once daily) reduce triglycerides by 40–60 percent, and cause a 15–25 percent increase in HDL-cholesterol concentrations. Nevertheless, fibrates often raise LDL-cholesterol levels by 5–30 percent (by forming larger LDL particles). This reciprocal increase in LDL cholesterol usually means that fibrates alone do not lower non-HDL-cholesterol levels (Vega and Grundy, 1990c). Therefore, if fibrates are employed it is usually necessary to combine them with a statin to attain the non-HDL-cholesterol goal (East et al., 1988). Supplements of long chain n-3 polyunsaturated fatty acids present in fish oil, particularly eicosapentaenoic acid at doses of 3 g per day, have been shown to reduce plasma

triglycerides by up to 30 percent, and at higher doses (9 g per day) by up to 50 percent (Harris et al., 1990; Connor 1999). They represent an alternative for use in combination with statins.

Rarely, persons with high triglycerides have familial dysbetalipoproteinemia. In this condition, excess triglycerides are transported in cholesterol-enriched VLDL remnants (beta-VLDL). The same therapeutic approaches are effective as in those with other genetic forms of high triglycerides. Weight reduction is effective in lowering beta-VLDL in overweight/obese persons. Fibrates and nicotinic acid are particularly efficacious for reducing beta-VLDL (Hoogwerf et al., 1984; Guyton 1999), but statins also can be effective (East 1986).

Very high triglycerides (≥500 mg/dL). When triglycerides are very high (≥500 mg/dL), drugs that raise triglycerides should be identified and preferably discontinued. Alcohol should be eliminated. If hyperglycemia is present, insulin or oral hypoglycemic drugs may be started or increased in dosage. When triglyceride levels are >1000 mg/dL, very low-fat diets (<15 percent of total calories as fat) should be started immediately to lessen chylomicronemia that contributes importantly to very high triglycerides. Weight reduction and increased physical activity as components of TLC should be emphasized. Triglyceride-lowering drugs (fibrates or nicotinic acid) are usually required and are efficacious in persons with very high triglycerides and often can prevent acute pancreatitis. Fibrates generally are the most practical choice (Garg and Grundy, 1989). Gemfibrozil (600 mg twice daily) has been reported to reduce serum triglycerides by a mean of 74 percent in persons with severe hypertriglyceridemia (Leaf et al., 1989) and eliminate chylomicrons from plasma. Fenofibrate appears to be similarly effective in persons with severe hypertriglyceridemia (Goldberg et al., 1989). The n-3 fatty acids likewise can lower triglycerides and may be used as adjunctive therapy (Harris et al., 1990; Connor 1999). Nicotinic acid also is effective, but high doses (>2 g/day) generally should be used cautiously in persons with elevated serum glucose; in these persons, nicotinic acid may worsen hyperglycemia. If the latter occurs, triglyceride levels may actually rise. For most persons with extremely high triglycerides, therapy can be considered successful if it reduces serum triglycerides to <500 mg/dL; often it is not possible to normalize triglycerides in these persons. The first priority for persons with severe hypertriglyceridemia is to prevent acute pancreatitis; a secondary goal is to reduce risk for CHD.

In very rare circumstances, triglyceride and chylomicron levels are extremely elevated from birth. Affected persons usually have a genetic form of complete absence of either lipoprotein lipase or apo CII, an activator of lipoprotein lipase (Santamarina-Fojo 1998). These persons run a high risk for pancreatitis throughout life. They are unresponsive to triglyceride-lowering drugs. Treatment consists of very low-fat diets, although the diet can be supplemented with medium-chain triglyceride, which does not form chylomicrons when absorbed.

3. Low HDL cholesterol (without hypertriglyceridemia)

a. Definition, causes and relationship to CHD

A low level of HDL cholesterol is associated with increased risk for CHD and is classified as a major risk factor for CHD. ATP III sets HDL-cholesterol level of <40 mg/dL as a categorical risk factor and designates it a factor that modifies the LDL goal. The causes of low HDL-

cholesterol levels and postulated mechanisms for its relationship to CHD are presented in Table VII.3–1.

Table VII.3–1. Low Serum HDL Cholesterol: Causes and Associations with CHD

Causes of Low HDL	Postulated Factors Associating Low HDL with CHD
Elevated serum triglycerides Overweight and obesity* Physical inactivity* Cigarette smoking Very high carbohydrate intake (>60% of total energy) Type 2 diabetes* Certain drugs† Genetic factors*	• Direct atherogenic effect of low HDL Postulated mechanisms: – Decreased reverse cholesterol transport – Increased LDL oxidation – Increased LDL aggregation – Increased arterial inflammation • Marker for atherogenic dyslipidemia ("lipid triad"): – Higher VLDL triglycerides and remnant lipoproteins – Small, dense LDL – Low HDL cholesterol • Marker for metabolic syndrome – Abdominal obesity – Atherogenic dyslipidemia – Elevated blood pressure – Insulin resistance and elevated plasma glucose – Prothrombotic state – Proinflammatory state • Cigarette smoking – Smoking lowers HDL cholesterol

* Overweight, obesity, physical inactivity, type 2 diabetes, and certain genetic factors may exert their effects on HDL-cholesterol levels in part through insulin resistance and commonly through higher triglyceride levels.

† Drugs include beta-blockers, anabolic steroids, progestational agents.

The causes of low HDL cholesterol also were presented in Section II.3. When serum triglycerides become borderline high (150–199 mg/dL), HDL-cholesterol levels begin to fall. When triglyceride levels are greater than 150 mg/dL, HDL-cholesterol concentrations frequently are <40 mg/dL in men (or <50 mg/dL in women) (Albrink et al., 1980; Phillips et al., 1981). Thus, the term *isolated low HDL* can be reserved for HDL-cholesterol levels <40 mg/dL in the presence of serum triglycerides <150 mg/dL. Causes other than elevated triglycerides listed in Table VII.3–1 account for most cases of isolated low HDL. In the United States, population, obesity and physical inactivity are major factors; genetic factors undoubtedly play an important role as well in many persons (Cohen et al., 1994). In rare cases, genetic defects in metabolism of HDL alone can cause isolated low HDL.

The relationship between HDL and CHD risk is complex (see Table VII.3–1). First, a low HDL per se may directly promote the development of coronary atherosclerosis and predispose to CHD. Several mechanisms have been implicated: impaired reverse cholesterol transport, loss of protection against atherogenicity of LDL, and reduction in HDL-carried, anti-atherogenic factors (Rubin et al., 1991; Plump et al., 1994; Tangirala et al., 1999; Tall 1998; van Lenten et al., 1995; Navab et al., 2000a,b). Some persons with severe deficiency of HDL do not manifest premature CHD (Romling et al., 1994; Takata et al., 1995); this suggests that HDL is not uniquely involved in atherogenesis, as is LDL. But this finding does not rule out the possibility that HDL provides some protection against development of CHD. Second, a low HDL commonly is a *marker* for

atherogenic dyslipidemia (lipid triad)—raised triglycerides and remnant lipoproteins, small LDL particles, and low HDL (Schaefer et al., 1994; Phillips et al., 1981). Both remnants and small LDL may have independent atherogenic properties (see Section II.3). Finally, a low HDL cholesterol can be a *marker* for the metabolic syndrome; many persons with isolated low HDL have the other risk factors characteristic of this syndrome (Vega and Grundy, 1996). Besides atherogenic dyslipidemia, these persons often have hypertension and insulin resistance, the latter being indicated by the presence of abdominal obesity. Prothrombotic and proinflammatory states typically are noted in persons with the metabolic syndrome (see Section II.6). Finally, cigarette smoking reduces HDL-cholesterol concentrations and represents another factor contributing to the HDL-CHD relationship in smokers.

b. Therapeutic considerations in persons with low HDL cholesterol

1) Clinical trial evidence

Several clinical trials suggest that raising HDL-cholesterol levels contributes to decreased risk for CHD (see Section II.3.c). Nonetheless, in these trials, changes in other lipoproteins also have occurred. For this reason, the benefit of raising HDL per se is not known with certainty. Several clinical trials have recruited persons with low HDL-cholesterol levels and no significant elevations of triglycerides (Table VII.3–2). These trials thus provide information on the benefit of lipoprotein modification in persons with low HDL-cholesterol levels. For example, the AFCAPS/TexCAPS (Downs et al., 1998) trial recruited men and women without cardiovascular disease who had relatively low HDL levels; in this study, LDL lowering with lovastatin reduced risk for CHD. Similar results were observed in persons with CHD treated with statins (see Table II.2–3). Furthermore, angiographic trials have documented reductions in progression of atherosclerosis in persons with low levels of HDL cholesterol treated with fluvastatin in the Lipoprotein and Coronary Atherosclerosis Study (LCAS) (Herd et al., 1997) or with lovastatin in the Post-Coronary Artery Bypass Graft Trial (The Post Coronary Artery Bypass Graft Trial Investigators 1997). In the latter trial, LDL-cholesterol levels were reduced moderately and markedly in two arms of therapy. For those subjects with low HDL-cholesterol levels, there was a marked reduction in risk in the group with LDL-cholesterol levels of 95 mg/dL as compared to 135 mg/dL. Finally, meta-analyses of statin trials showed no difference in benefit of LDL lowering between high HDL and low HDL strata (Table II.2–3). These studies taken together document that lowering LDL cholesterol in persons with isolated low HDL significantly reduces risk for CHD.

The VA-HIT study (Rubins et al., 1999) specifically targeted persons with isolated low HDL for gemfibrozil therapy. Persons in this trial had low levels of HDL cholesterol (mean 32 mg/dL), only modestly elevated triglycerides (mean 161 mg/dL), and LDL-cholesterol concentrations <140 mg/dL (mean 111 mg/dL). The reduction in major cardiovascular events in this trial observed with gemfibrozil therapy was attributed in part to raising HDL-cholesterol levels. Likewise, the decrease in major coronary events during gemfibrozil therapy in the Helsinki Heart Study (Frick et al., 1987) was estimated to be due partly to an increase in HDL-cholesterol levels.

Table VII.3–2. Low HDL-C: Clinical Trial Evidence and HDL Response to Therapy

Clinical Trial Evidence of Benefit of Therapy for Persons with Low HDL	Aggregate Evidence from Literature Review on HDL Response to Therapy
• Statin trials: LDL-lowering therapy reduces CHD risk in persons with low HDL – 4S – CARE – LIPID – WOSCOPS – AFCAPS/TexCAPS – LCAS – Post CABG • Nicotinic acid trial: – Nicotinic acid effectively raises HDL – Coronary Drug Project indicated that nicotinic acid reduces major coronary events • Fibric acid trials: – Fibrates favorably modify atherogenic dyslipidemia – Multiple fibrate trials in aggregate produce favorable trend for reduction of CHD events (see Section II.3)	• Weight reduction – 5–20% increase in HDL • Physical activity – 5–30% increase in HDL • Smoking cessation – 5% increase in HDL • Statin therapy – 5–10% increase in HDL • Fibrate therapy – 5–15% increase in HDL • Nicotinic acid therapy – 15–30% increase in HDL

2) Recommendations for low HDL cholesterol in persons with CHD or CHD risk equivalents, 10-year risk >20 percent

Low HDL-cholesterol levels are common in persons with CHD or CHD risk equivalents. In these persons, the primary target of therapy is LDL cholesterol. If the person with low HDL cholesterol has the metabolic syndrome, TLC should emphasize weight reduction and increased physical activity. Consideration can also be given to using a drug to modify HDL metabolism. For example, the VA-HIT trial evaluated the effects of gemfibrozil therapy in CHD patients with low HDL; the significant reduction of major coronary events observed in this trial supports the efficacy of this approach. Nicotinic acid can be used instead of a fibrate; it has the advantage of raising HDL cholesterol two- to three-fold more than fibrates. Finally, the combined use of an LDL-lowering drug with either a fibrate or nicotinic acid is attractive for high risk persons with isolated low HDL to improve the whole lipoprotein profile. Using drugs in combination may increase the likelihood of side effects.

3) Considerations for persons with low HDL cholesterol in other risk categories, 10-year risk ≤20 percent

In persons *without* CHD or CHD risk equivalents, low HDL cholesterol counts as a risk factor that modifies the goal for LDL cholesterol. The first line of therapy for isolated low HDL is to

maximize life habit changes. These include all components of TLC—reduction in cholesterol-raising nutrients, LDL-lowering options, weight reduction, and increased physical activity. The AFCAPS/TexCAPS trial demonstrated that LDL lowering in persons with low HDL to reduces CHD risk. Whether a drug to modify atherogenic dyslipidemia, i.e., fibrate or nicotinic acid, could achieve similar benefit in primary prevention is uncertain because primary prevention trials with these drugs have not targeted persons with isolated low HDL.

Persons with low HDL cholesterol and 0–1 other risk factor can present a quandary for clinical management. Apparently some forms of low HDL are atherogenic, whereas others are not. Some authorities advocate the use of emerging risk factors to assist in risk assessment in apparently low risk persons with low HDL. For example, noninvasive assessment of coronary or carotid atherosclerosis by coronary EBCT or carotid sonography, respectively, could assist in identifying which "low-risk" persons with low HDL-cholesterol levels are at higher risk.

4. Diabetic dyslipidemia

a. Definition of diabetic dyslipidemia

The term *diabetic dyslipidemia* essentially refers to *atherogenic dyslipidemia* occurring in persons with type 2 diabetes (Durrington 1999). It is characterized by elevated TGRLP, small LDL particles, and low HDL-cholesterol concentrations. Diabetic dyslipidemia must be considered as one component of the metabolic syndrome, which is exceedingly common in persons with type 2 diabetes.

b. Role of elevated LDL and other risk factors in causation of CHD in persons with diabetes (Table VII.4–1)

Table VII.4–1. Role of CHD Risk Factors in Persons with Diabetes: Evidence and Postulated Mechanisms of Causation

Risk Factor	Evidence and Mechanisms
LDL cholesterol	• Borderline high LDL cholesterol (130–159 mg/dL) common in persons with diabetes • High LDL cholesterol (≥160 mg/dL) occurs at average rates in persons with diabetes • Statin trials show benefit from LDL-lowering therapy • 4S trial: Simvastatin therapy reduced CHD events in persons with diabetes by 53% • CARE/LIPID pooled data: pravastatin therapy significantly reduced CHD events in persons with diabetes
Atherogenic dyslipidemia	• High triglycerides, low HDL, and small LDL common in type 2 diabetes • Elevated triglycerides appear to be an “independent” risk factor in persons with diabetes
Hyperglycemia	• Hyperglycemia is an independent risk factor for CHD • Several mechanisms postulated – Glycation of arterial wall proteins – Atherogenic advanced glycation end-products (AGEs) – Induction of a proinflammatory state • Treatment of hyperglycemia reduces microvascular complications in both type 1 diabetes and type 2 diabetes • Treatment of hyperglycemia may reduce macrovascular complications (DCCT) (Diabetes Control and Complications Trial Research Group 1993) • Ongoing clinical trials are underway to further test efficacy for glycemic control on macrovascular clinical events
Hypertension	• Increased frequency of hypertension in persons with diabetes • Commonly associated with insulin resistance • Diabetic renal disease may be a factor • Hypertension major cause of morbidity in persons with diabetes • Treatment of hypertension reduces cardiovascular morbidity in persons with diabetes (UKPDS) (UK Prospective Diabetes Study 1998d)
Cigarette smoking	• Cigarette smoking compounds the risk for CHD accompanying diabetes
Gender considerations	• The protective effect of female sex against CHD is reduced in persons with diabetes • Therefore, treatment guidelines are the same for men and women with diabetes
Prothrombotic state	• Persons with diabetes have higher levels of prothrombotic factors than nondiabetic persons; these may contribute to higher risk for CHD in persons with diabetes
Proinflammatory state	• Persons with diabetes have higher levels of proinflammatory factors than nondiabetic persons; these may reflect increased risk for major coronary events in persons with diabetes

LDL-cholesterol levels in persons with diabetes typically are not higher than those of persons without diabetes who are matched for age, sex, and body weight (Strandberg et al., 1996; Sosenko et al., 1993; Barrett-Connor et al., 1987). Nonetheless, since LDL levels are relatively high in populations such as the United States, it is invalid to conclude that elevated LDL cholesterol is not a significant "risk factor" in persons with type 2 diabetes (Barrett-Connor et al., 1987). Moreover, the number of LDL particles in persons with type 2 diabetes usually is greater than is reflected by LDL-cholesterol levels because LDL particles are small and partially depleted of cholesterol (Haffner et al., 1994). Moreover, the adverse atherogenic interaction between elevated LDL and other risk factors of the metabolic syndrome imparts greater pathological significance to LDL cholesterol in type 2 diabetes.

The importance of LDL cholesterol in type 2 diabetes is confirmed by reports from major clinical trials of statin therapy. The 4S, CARE, and LIPID trials (Scandinavian . . . Study Group 1994; Sacks 2000a; Long Term Intervention . . . Study Group 1998) each contained subgroups of persons with diabetes. Subgroup analysis of each of these trials revealed a strong trend towards reduction in major coronary events with LDL lowering in persons with diabetes. In the 4S trial (Pyorala et al., 1997; Haffner et al., 1999a) and CARE study (Goldberg 1998), reductions in major coronary events in subgroups with diabetes were statistically significant. In the LIPID trial the apparent reduction in risk in persons with diabetes, although not statistically significant, was consistent with the benefit found in other subgroups. In a more recent pooled analysis of pravastatin studies (CARE + LIPID), patients with diabetes had a significantly reduced risk for CHD on drug therapy (Long Term Intervention . . . Study Group 1998, Sacks et al., 2000b). Thus, the combined results of three major clinical trials strongly suggest that LDL-lowering therapy in CHD patients with type 2 diabetes reduces risk for CHD similarly to that observed in persons without diabetes (see Table II.12–4). Unfortunately, few clinical trial data are available on the efficacy of LDL lowering in diabetic persons without CHD (primary prevention). Nonetheless, on the basis of secondary prevention trials, the ATP III panel concludes that LDL cholesterol is the primary lipid target in persons with diabetes.

Persons with diabetes often have other abnormalities in serum lipids and lipoproteins that may contribute to the increased risk for CHD accompanying diabetes. The term *diabetic dyslipidemia* is synonymous with *atherogenic dyslipidemia* (Verges 1999; Durrington 1999; Kreisberg 1998). It must be recognized, nonetheless, that abnormalities in lipids and lipoproteins represent only one factor among several that are responsible for the increased risk in persons with diabetes. Other factors include hypertension, hyperglycemia, insulin resistance, excessive glycation of cellular proteins, increased amounts of advanced glycation end products (AGEs), increases in proinflammatory and prothrombotic factors, and cigarette smoking. The importance of controlling nonlipid risk factors is emphasized by controlled clinical trials. The UKPDS showed that treatment of hypertension improved cardiovascular outcome in persons with type 2 diabetes (UK Prospective Diabetes Study Group 1998c,d). In addition, the DCCT (Diabetes Control and Complications Trial Research Group 1993) found that improved glycemic control in persons with type 1 diabetes significantly reduced microvascular complications with a trend towards reduction in macrovascular events including myocardial infarction. Thus, maximal reduction in cardiovascular risk in persons with diabetes requires a multifactorial approach in which all of the major risk factors are treated.

c. Therapeutic recommendations for lipoprotein disorders in persons with diabetes

1) Special therapeutic considerations according to LDL-cholesterol level (Table VII.4–2)

Table VII.4–2. Special Considerations for Lipid Management in Persons with Diabetes

Serum LDL-Cholesterol Level	Special Therapeutic Considerations
LDL ≥130 mg/dL	• Initiate TLC in all persons • Many persons, both type 1 and type 2 diabetes, will require LDL-lowering drugs (statins usually first choice) • LDL goal: <100 mg/dL • If triglycerides ≥200 mg/dL, non-HDL-C goal: <130 mg/dL • If LDL ≥130 mg/dL, LDL-lowering drug usually indicated along with TLC • Type 1 diabetes: clinical judgment required for how intensively to employ LDL-lowering therapy to reach an LDL of <100 mg/dL (however, consider LDL-lowering drug if LDL ≥130 mg/dL) • Type 2 diabetes: generally delay management of atherogenic dyslipidemia until LDL goal has been achieved • If triglycerides ≥200 mg/dL, consider treatment with fibrate or nicotinic acid (either as alternative to or in combination with LDL-lowering drug) to achieve goal for non-HDL • Intensively treat nonlipid risk factors (hypertension, cigarette smoking, hyperglycemia) • If nicotinic acid is employed, use relatively low doses (<3 g/day)
Baseline LDL 100–129 mg/dL	• Initiate TLC in all persons • Intensively treat nonlipid risk factors • Consider therapeutic options: intensive TLC; LDL-lowering drug; drug to lower triglycerides or raise HDL; control of nonlipid risk factors • If triglycerides ≥200 mg/dL, non-HDL goal: <130 mg/dL • If triglycerides ≥200 mg/dL, consider treatment with fibrate or nicotinic acid (either as alternative to or in combination with LDL-lowering drug) to achieve goal for non-HDL • If nicotinic acid is employed, use relatively low doses (<3 g/day)

Table VII.4–2. (continued)

Serum LDL-Cholesterol Level	Special Therapeutic Considerations
On-Treatment LDL 100–129 mg/dL	• Intensify TLC in all persons • Intensively treat nonlipid risk factors • If triglycerides <200 mg/dL, consider intensifying LDL-lowering therapy (e.g., higher dose of statin or combining a statin with a bile acid sequestrant) • If triglycerides ≥200 mg/dL, consider adding fibrate or nicotinic acid to statin therapy to achieve non-HDL-C goal <130 mg/dL* • If nicotinic acid is employed, use relatively low doses (<3 g/day)
Baseline LDL <100 mg/dL	• Initiate TLC in all persons to reduce overall risk • Intensively treat nonlipid risk factors • If triglycerides ≥200 mg/dL, consider using a fibrate or low-dose nicotinic acid to achieve non-HDL-C goal <130 mg/dL. • If nicotinic acid is employed, use relatively low doses (<3 g/day)

* The combination of statins plus fibrates is accompanied by increased risk for myopathy. Persons should be instructed to be aware of the signs and symptoms of myopathy and to report these immediately to the physician.

Since diabetes falls into the category of CHD risk equivalent, the goal for LDL cholesterol in persons with diabetes, particularly type 2 diabetes, is <100 mg/dL. The rationale for identifying diabetes as a CHD risk equivalent was given in Section II. Nonetheless clinical experience and judgment are required for the management of lipids when persons have diabetes. There is widespread agreement that LDL cholesterol should be reduced to less than 130 mg/dL in almost all persons with diabetes, and the American Diabetes Association recommends an LDL-cholesterol goal of less than 100 mg/dL in most diabetic persons (American Diabetes Association 2001).

TLC should be started in all persons when LDL cholesterol is ≥130 mg/dL. Most persons with diabetes will require an LDL-lowering drug to reach the LDL goal of <100 mg/dL. If the patient also has high triglycerides (≥200 mg/dL), non-HDL cholesterol will be a secondary target. Simultaneous control of other risk factors is essential.

When baseline LDL-cholesterol levels are in the range of 100–129 mg/dL, several therapeutic options are available. First, maximal changes in life habits, including reduction of saturated fat and cholesterol intakes, use of LDL-lowering dietary options (plant stanol/sterols and increased viscous fiber), weight reduction, and increased physical activity may achieve an LDL-cholesterol level <100 mg/dL in some persons without the need for LDL-lowering drugs. Second, in those who do not achieve an LDL cholesterol <100 mg/dL with TLC alone, an LDL-lowering drug can be added to the regimen. Alternatively, a drug (i.e., fibrate) that primarily targets atherogenic dyslipidemia can be used. Without question, maximal control of nonlipid risk factors, e.g., hyperglycemia and hypertension, is necessary in persons with low LDL levels. In persons with type 2 diabetes in whom LDL-cholesterol levels have been reduced into the range of 100–

129 mg/dL on LDL-lowering drugs, clinical judgment is required to determine whether or how to intensify therapy. One option is to increase the dose of the LDL-lowering drugs to further reduce LDL-cholesterol levels to <100 mg/dL; along this line, two LDL-lowering drugs (e.g., statin + bile acid sequestrant) can be combined. Alternatively, intensification of LDL-lowering therapy with TLC may sufficiently lower LDL levels without changing drug therapy. Finally, a fibrate can be added to an LDL-lowering drug to improve atherogenic dyslipidemia. The advantage of combining a fibrate with an LDL-lowering drug is that the overall lipoprotein pattern is improved. The disadvantage is that it increases the risk for severe myopathy.

For LDL lowering, statins are usually the drugs of choice in persons with diabetic dyslipidemia. They are highly efficacious for LDL reduction, and they are well tolerated by persons with diabetes. hoc analysis of major clinical trials shows that statins reduce risk for major coronary events in persons with diabetes. Moreover, statins lower VLDL remnants as well as LDL, and often can achieve the secondary goal for non-HDL cholesterol in hypertriglyceridemic persons with diabetes. Bile acid sequestrants also can be used for LDL lowering in persons with diabetes (Garg and Grundy, 1994). However, they do not reduce VLDL cholesterol, and in some persons, actually raise triglyceride levels.

When baseline LDL cholesterol is <100 mg/dL, the non-HDL cholesterol should be estimated to determine whether it is still a target for cholesterol-lowering therapy. TLC is indicated for treatment of atherogenic dyslipidemia and the metabolic syndrome. Other risk factors should be controlled. If the triglyceride level is ≥200 mg/dL, use of a fibrate or a low dose of nicotinic acid (<3 g/day) may assist in achieving the non-HDL-cholesterol goal of <130 mg/dL (Garg and Grundy, 1990).

2) Comments on specific drug classes used in management of lipid disorders in persons with diabetes

Statins are first-line therapy for reducing LDL-cholesterol levels in persons with diabetes and they are generally well tolerated. They have the advantage of lowering VLDL cholesterol as well as LDL cholesterol; thus they can assist in attaining the non-HDL-cholesterol goal when triglyceride levels are ≥200 mg/dL. Bile acid sequestrants also are effective LDL-lowering drugs in persons with diabetes (Garg and Grundy, 1994). Their potential utility for LDL lowering either as monotherapy or in combination with statins should not be overlooked. They generally are not contraindicated simply because of their tendency to raise triglycerides. Nonetheless, triglyceride levels should be monitored.

Fibrates favorably modify diabetic dyslipidemia. They are well tolerated, and do not worsen hyperglycemia. They probably produce some reduction in CHD risk, and could be used in persons who have low LDL-cholesterol levels and atherogenic dyslipidemia (Rubins et al., 1999). In addition, they can be combined with statins to improve the overall lipoprotein pattern (Garg and Grundy, 1989). For many years, fibrates were considered first-line therapy for persons with diabetes. However, the results of recent clinical trials now favor use of statins before fibrates in most persons. Still, the combination of statin + fibrate is attractive in persons with diabetes who have atherogenic dyslipidemia but in whom LDL lowering is required to achieve

the LDL-cholesterol goal. Clinical trials are currently underway to test the efficacy of statin + fibrate in treatment of diabetic dyslipidemia.

Nicotinic acid also has a favorable effect on diabetic dyslipidemia. Recent clinical trials (Elam et al., 2000; Grundy et al., 2001b) in persons with diabetes indicated that low doses of nicotinic acid are accompanied by only modest deterioration in glucose control with no changes in HbA1C levels. Unfortunately, nicotinic acid therapy can increase insulin resistance (Kahn et al., 1989; Kelly et al., 2000) and clinical experience has shown that in rare instances, diabetic dyslipidemia is worsened with nicotinic acid therapy.

Treatment with hypoglycemic agents also can improve diabetic dyslipidemia. Insulin therapy, sulfonyl ureas, metformin, and glitazones can all lower triglyceride levels. Although they may not be as effective as fibrates in modifying atherogenic dyslipidemia, control of hyperglycemia should be maximized before considering a fibrate in combined lipid-lowering drug therapy. If hypertriglyceridemia can be adequately controlled by glucose-lowering therapy, a lipid-lowering drug may not be needed.

5. Other secondary dyslipidemias

Hypothyroidism. A low level of thyroid hormone raises LDL-cholesterol levels. The importance of this condition is that some persons have “masked” or subclinical hypothyroidism. For this reason, any patient with LDL cholesterol >160 mg/dL should be tested for hypothyroidism.

Nephrotic syndrome. This condition is characterized by proteinuria, edema, and severe hyperlipoproteinemia. Elevation of LDL cholesterol is the major lipid abnormality, whereas hypertriglyceridemia develops in some persons. There is evidence that nephrotic dyslipidemia increases risk for CHD (Alexander et al., 1974; Berlyne and Mallick, 1969; Mallick and Short, 1981). Therefore, if hyperlipidemia persists despite specific treatment for renal disease, consideration can be given to use of cholesterol-lowering drugs. Although several lipid-lowering agents appear to modify elevated lipid levels, statins are particularly effective (Grundy 1990; Rabelink 1988; Matzkies et al., 1999; Toto et al., 2000).

Other renal disorders. Various dyslipidemias have been reported in persons with chronic renal failure, in those on hemodialysis, and in persons following transplantation (Attman et al., 1987). Hypertriglyceridemia and low HDL-cholesterol levels are the most frequently described lipid abnormalities with chronic renal failure and hemodialysis (Bagdade et al., 1968; Rader and Rosas, 2000). Hypercholesterolemia and hypertriglyceridemia often occur in persons following renal transplantation (Casaretto et al., 1974; Gokal et al., 1979). Although persons with these conditions have been reported to be predisposed to CHD, they often have other risk factors (e.g., hypertension, smoking, and diabetes) that deserve primary attention. Few studies have been carried out on treatment of dyslipidemia in these conditions, and a cautious approach should be taken since these persons are prone to drug side effects. For example, they are at increased risk for severe myopathy from both fibrates and statins.

Obstructive liver disease. Biliary obstruction can lead to severe hypercholesterolemia that is resistant to conventional cholesterol-lowering drugs. The only effective therapy is treatment of the underlying liver or biliary tract disease.

Protease-inhibitor induced dyslipidemia. Although protease inhibitors have improved morbidity and mortality in patients with human immunodeficiency virus (HIV), these drugs unfortunately can cause serious metabolic disorders (Hruz et al., 2001; Penzak and Chuck, 2000; Graham 2000). The latter include peripheral lipodystrophy, increased visceral fat, hyperlipidemia, insulin resistance, and diabetes. The lipid pattern typically is that of atherogenic dyslipidemia (elevated triglyceride and low HDL-cholesterol levels). The mechanisms underlying the metabolic complications are unknown, although they resemble those of a genetic disorder called familial partial lipodystrophy (Garg 2000). To date there is limited experience with lipid-lowering drugs for treatment of protease-inhibitor induced lipodystrophy. However, clinical experience indicates that both fibrates and statins will reduce serum triglycerides and cholesterol in this condition (Penzak and Chuck, 2000). Fibrates may be especially useful to prevent the occurrence of acute pancreatitis associated with severe hypertriglyceridemia.

6. Persons with high blood cholesterol and concomitant hypertension

In 1990, NHLBI published a report of a working group on management of patient with concomitant high blood cholesterol and hypertension (Working Group Report . . . High Blood Cholesterol 1990; Working Group . . . High Blood Cholesterol 1991). The major findings of this study are reviewed and updated in this section. Both high blood cholesterol and high blood pressure are common in U.S. adults, and these two conditions frequently coexist. Persons with high blood cholesterol have a higher than expected prevalence of hypertension, and persons with hypertension have a higher than expected prevalence of high blood cholesterol. According to unpublished data from NHANES II, 40 percent of the 51 million individuals with hypertension (blood pressure ≥140/90 mmHg or currently taking antihypertensive medications) have cholesterol levels ≥240 mg/dL, and 46 percent of those with cholesterol levels ≥240 mg/dL have hypertension. The risk gradient for blood pressure (systolic and diastolic) is similar to that for serum cholesterol; the higher the blood pressure, the greater the risk of CHD (Lerner and Kannel, 1986). In persons with both elevated cholesterol and high blood pressure, CHD risk is synergistically increased. Conversely, reducing blood pressure, like cholesterol lowering, decreases risk for cardiovascular disease (MacMahon et al., 1986).

a. Therapeutic considerations

In persons with concomitant hypertension and hypercholesterolemia, both conditions should be treated aggressively, especially in persons with known CHD. Diet and other lifestyle therapies are the essential first steps of therapy for elevations of both blood pressure and cholesterol. The principles of dietary therapy are similar in both cases and include reductions of calories, saturated fat, cholesterol, and alcohol consumption; sodium reduction and ample potassium intake are also important for control of hypertension. The recommended diet should emphasize fruits, vegetables, and low-fat dairy products (Obarzanek et al., 2001; Sacks et al., 2001). In overweight persons, weight reduction is very important and essential to the management of elevated blood pressure (Reisin et al., 1983) as well as for high blood cholesterol. Persons should

be reminded that weight reduction and control is a chronic rather than an acute treatment and that successful weight control will be achieved only through long-term lifestyle modification that emphasizes both nutritional balance and physical activity (Eckel 1997; National Institutes of Health 1998a,b). Exercise is also important because of its benefits on cardiovascular fitness and weight reduction as well as lowering of blood pressure and cholesterol (U.S. Department of Health and Human Services 1996b). Smoking cessation should also be included in the life habit changes required to improve cholesterol and blood pressure levels.

b. Effects of antihypertensive agents on serum lipids

Several antihypertensive agents affect serum lipid levels, whereas others do not (Weinberger 1985; Lardinors and Neuman, 1988). For example, calcium channel antagonists, angiotensin converting enzyme inhibitors, hydralazine, minoxidil, potassium-sparing diuretics, and reserpine have minimal if any effects on serum lipids. Higher doses of thiazide diuretics can cause modest and often transient elevations (5–10 mg/dL) in serum total and LDL cholesterol and serum triglycerides with little or no adverse effects on HDL cholesterol. The effects of loop diuretics are similar to those of thiazides with increases in total and LDL cholesterol, whereas HDL-cholesterol levels are generally lower in persons on furosemide. Data regarding indapamide are inconclusive, but suggest a neutral effect. Alpha-1-adrenergic blockers and centrally acting alpha-2-receptor agonists have a slight beneficial effect on blood lipids by decreasing total and LDL cholesterol. In general, beta-blockers without intrinsic sympathomimetic activity (ISA) or alpha-blocking properties tend to reduce HDL cholesterol, increase serum triglycerides, and have variable effects on total serum cholesterol. These effects are very modest and should not play a role in the selection of specific antihypertensive agents. Beta-blockers with ISA and the beta-blocker labetalol (which has alpha-1-adrenergic blocking properties) produce no appreciable changes in lipid levels.

The effects of antihypertensive drugs on the efficacy of lipid-lowering agents have not been carefully evaluated, but among participants in the Lipid Research Clinics Coronary Primary Prevention Trial (LRC-CPPT), those who were taking thiazide diuretics did not reduce LDL cholesterol as much as those who were not using thiazide diuretics (Weinstein and Statson, 1977; Glueck et al., 1986). Regardless of the potential of thiazide diuretics to raise serum cholesterol levels, they are still considered to be first-line therapies for hypertension (JNC VI 1997; Joint National Committee . . . Pressure 1997). Moreover, lower doses of thiazides appear to have less of a cholesterol-raising action as well as few other side effects (Ames 1996; Freis 1995). For these reasons, use of lower doses of thiazides need not be excluded in antihypertension regimens in persons undergoing clinical cholesterol management.

c. Selection of antihypertensive therapy

When lifestyle measures alone do not achieve desired goals, the addition of drug therapy may be required. Selection of drug therapy requires consideration of benefits, effects of therapy on quality of life, concomitant diseases, and costs. In general, selection of specific antihypertensive drugs for persons with elevated LDL-cholesterol levels should follow the guidelines outlined in the Sixth Report of the Joint National Committee on Prevention, Detection, Evaluation, and Treatment of High Blood Pressure (JNC VI 1997; Joint National Committee 1997). Selection of

lipid-lowering agents in persons with elevated blood pressure should follow the guidelines listed elsewhere in this report.

Drug therapy for uncomplicated hypertension should begin with a diuretic or beta-blocker. In older patients, a diuretic is preferred and a DHP calcium antagonist can be considered. In certain comorbidities (such as CAD, heart failure, renal disease, diabetes), angiotensin converting enzyme inhibitors or calcium antagonists have special indications. Alpha blockers should not be used as monotherapy or in those at risk for developing heart failure (ALLHAT Officers and Coordinators . . . 2000). Diuretics may slightly raise LDL-cholesterol levels and some beta-blockers may depress HDL-cholesterol levels, but these drugs should not be avoided if their non-use means less than optimal blood pressure control; further, their possible adverse effects on lipids should be balanced by considerations of efficacy, tolerability, cost, and adherence. Some persons will have strong indications for one of these medications (for example, beta-blockers in the post-myocardial infarction patient and diuretics in persons with salt-dependent hypertension). Therefore, they are not contraindicated even in the presence of the dyslipidemia. Some persons are not sensitive to the adverse effects of diuretics on lipids, and in others a low-saturated-fat, low-cholesterol diet will blunt or negate these effects. It should be noted that in the Systolic Hypertension in the Elderly Program (SHEP Cooperative Research Group 1991), use of low doses of thiazides and/or beta-blockers reduced both stroke and CHD in older persons and in fact had limited adverse effects on lipids (Savage et al., 1998). Thus any adverse effect on plasma lipids in this trial did not offset their net beneficial effect.

d. Selection of lipid-lowering therapy

Selection of drug therapy for persons with elevated cholesterol is discussed in depth elsewhere in this document. Several potential adverse effects on blood pressure control may occur and should be kept in mind. Bile acid sequestrants may decrease absorption of thiazide diuretics and propranolol, and medications should be given 1 hour before or 4 hours after the bile acid sequestrant. Nicotinic acid may enhance the fall in blood pressure due to antihypertensive vasodilators. Fibric acids are more likely to produce myopathy in persons with renal failure; therefore, dosage should be decreased and persons carefully monitored. The FDA lists no specific drug interactions between statins and antihypertensive agents; however, patients with some forms of renal disease may be at increased risk for myopathy with statin therapy (Weise and Possidente, 2000; Stirling and Isles, 2001; Al Shohaib 2000).

e. Compliance with therapy

Although the risks of elevated blood pressure and cholesterol levels are well-known, and the benefits of treatment well established, many persons are not adequately controlled. In the case of hypertension, more than half of persons are either untreated or inadequately treated. Poor adherence to therapy is a major reason for inadequate control of high blood pressure. Approximately 50 percent of persons with hypertension fail to keep followup appointments, and only 60 percent take their medications as prescribed. Efforts aimed at improving control of hypertension and hypercholesterolemia must address barriers to effective adherence. These include poor doctor-patient communication, cost of therapy, and side effects of medications. Lack of attention (complacency) to achieving treatment goals by health care providers is another

important reason for inadequate control rates of hypertension (Berlowitz 1998). Physicians and patients must be mutually committed to the goals of therapy and achieving control of the risk factor. Physicians must communicate instructions clearly and prescribe therapies that are effective, affordable, and have minimal or no adverse effects on the patient's quality of life or overall cardiac risk profile. Persons must follow recommendations and alert their physicians to any problems with their medications—particularly those relating to side effects and cost.

VIII. Special Considerations for Different Population Groups

Therapeutic recommendations in this report are based heavily on evidence from controlled clinical trials. Nonetheless, randomized clinical trials have not been carried out to address all therapeutic questions pertaining to all age groups, both sexes, and different racial/ethnic groups. Consequently, ATP III recommendations for various groups often must be made by combining what has been learned from clinical trials with other lines of evidence such as epidemiological findings. Fortunately, a large number of clinical trials have produced a very large set of consistent results that allow for considerable confidence in projections of benefits and drawbacks of cholesterol-lowering therapy in groups that have not been subject to clinical trials. In the discussion to follow, the ATP III panel has crafted its recommendations for different population groups from general evidence statements and general recommendations developed in previous sections. No attempt will be made to grade the category and strength of evidence for all recommendations made in this section.

1. Middle-aged men

Men of middle-age (35–65 years) are at increasing risk for CHD as they progressively age. Up to one-third of all new CHD events and about one-fourth of all CHD deaths occur in middle-aged men (Denke and Grundy, 1990). Most of the excess risk for CHD morbidity and mortality in middle-aged men can be explained by the major risk factors—cholesterol disorders, hypertension, and cigarette smoking (Stamler et al., 1986; Wilson et al., 1998). Men are predisposed to abdominal obesity, which makes them particularly susceptible to the metabolic syndrome. Consequently, metabolic risk factors (elevated cholesterol and triglycerides, low HDL cholesterol, and elevated blood pressure) appear earlier in men than women. Table VIII.1–1 summarizes factors to consider when applying ATP III guidelines to middle-aged men.

Table VIII.1–1. Special Considerations for Cholesterol Management in Middle-Aged Men

Risk Level	Special Considerations
CHD and CHD risk Equivalents 10-year risk >20% LDL-C goal <100 mg/dL	• Strong evidence of risk reduction from LDL lowering with statin therapy • Strong trend for risk reduction from drug treatment of atherogenic dyslipidemia (see section II.3) • Consider fibrates or nicotinic acid as a second lipid-lowering drug in persons with low HDL and atherogenic dyslipidemia • High prevalence of metabolic syndrome (requires intensive life-habit changes)
Multiple (2+) risk factors 10-year risk 10–20% LDL-C goal <130 mg/dL	• Strong evidence of risk reduction from LDL lowering with statins (WOSCOPS/AFCAPS) and bile acid sequestrants (LRC-CPPT) • Consider LDL-lowering drugs when LDL-C is >160 mg/dL • Consider LDL-lowering drugs when LDL-C remains at 130–159 mg/dL after TLC Diet • Emerging risk factors: testing optional to raise risk level
Multiple (2+) risk factors 10-year risk <10% LDL-C goal <130 mg/dL	• Strong evidence of risk reduction from LDL lowering with statins (AFCAPS) • Consider LDL-lowering drugs when LDL-C is >160 mg/dL • Emphasize TLC when LDL-C is 130–159 mg/dL – Consider nondrug therapeutic options—plant stanols/sterols and increased viscous fiber – Intensify weight control and physical activity when metabolic syndrome is present • Emerging risk factors: testing optional to raise risk level
0–1 risk factor 10-year risk <10% LDL-C goal <160 mg/dL	• Consider LDL-lowering drugs when LDL-C is ≥190 mg/dL • LDL-lowering drug is optional when LDL-C is 160–189 mg/dL – Factors favoring drug therapy: higher end of age range, presence of emerging risk factors (if measured), obesity, cigarette smoking, positive family history, very low HDL-C • Emphasize public health message (including heart healthy diet) when LDL-C <160 mg/dL

2. Women

CHD is a major cause of death in women as well as men and it ultimately kills as many women as men (Denke and Grundy, 1990). However, the onset of CHD is delayed by some 10–15 years in women compared to men; thus ATP III defines age as a risk factor in women at age 55, compared to age 45 for men. Since the onset of CHD is delayed by 10–15 years in women compared to men, it seems appropriate to include comments on treatment of women up to age 45 under younger adults (see below) and to restrict comments for older persons to women age >75 years (see below). Thus comments in this section will apply to women in the age range of

45 to 75 years. It is only at age 75 and above that CHD rates of women approximate those of men (Denke and Grundy, 1990). Because there are more older women than older men, the lifetime risk of CHD is almost as high in women as in men. The reasons for the disparity in ages of onset of CHD between women and men are not fully understood. The Framingham Heart Study could not explain the gender disparity solely on the basis of the major risk factors. Nonetheless, patterns of risk factors often differ between men and women. For example, blood pressure, LDL cholesterol, and triglycerides rise at an earlier age in men than in women. Moreover, HDL-cholesterol levels are on average some 10 mg/dL lower in adult men than in women. This latter difference is established at puberty when HDL-cholesterol levels decrease in males but not in females. Since a 10-mg/dL difference in HDL cholesterol is projected to account for a 20–30 percent difference in CHD event rates over the short term (Gordon et al., 1989), this difference over the adult lifespan could account for a significant portion of the gender disparity between men and women.

Although the magnitude of risk factors on average may vary between women and men, all of the major risk factors raise the risk for CHD in women (Wilson et al., 1998). This is true for lipid risk factors including LDL cholesterol and HDL cholesterol. Moreover, triglycerides appear to be an even more powerful risk factor in women than in men (Reardon et al., 1985; Korhonen et al., 1996; La Rosa 1997; Austin 1998; Sprecher et al., 2000).

A commonly cited reason for the gender difference is a protective effect of estrogen in women. Data in support, however, are open to varying interpretations. For example, while oral estrogens increase HDL cholesterol and decrease LDL cholesterol, they also increase the potential for coagulation and possibly for inflammation (Grady et al., 2000; Cushman et al., 1999; Scarabin et al., 1997; Kroon et al., 1994). Oral estrogens do not mimic the physiologic role of endogenous estrogen, which is released into the systemic rather than the portal circulation. When given through the transcutaneous route, estrogen does not in fact increase HDL cholesterol and has a more modest effect on LDL cholesterol and on coagulation factors than oral estrogen (Walsh et al., 1994; Walsh et al., 1991; Crook et al., 1992; Meschia et al., 1998). There is no acceleration of CHD rates at about the age of menopause as endogenous estrogen levels wane; but as in males, the rates simply increase in a log-linear fashion with age. There is very little or no decrease in HDL cholesterol in cohorts followed across the transition through the menopause (Do et al., 2000). Observational studies have consistently suggested that postmenopausal estrogen users are at lower risk of CHD than non-users. However these studies are confounded by a number of powerful biases that may account for a large overestimation of potential benefit (Barrett-Connor 1998; Rossouw 1999; Sotelo and Johnson, 1997).

Special considerations for management of serum cholesterol in women (ages 45–75 years) are presented in Table VIII.2–1. ATP III does not recommend different guidelines for men and women, but several nuances of difference are noted by comparison of Tables VIII.1–1 and VIII.2–1 for middle-aged men and women, respectively.

Table VIII.2–1. Special Considerations for Cholesterol Management in Women (Ages 45–75 years)

Risk Level	Special Considerations
CHD and CHD risk equivalents 10-year risk >20% LDL goal <100 mg/dL	• All secondary prevention trials with statins have included women • Meta-analysis (pooled data) of statin trials show 29% (CI 13–42%) reduction in CHD events (vs. 31% reduction in men) (LaRosa 1999) • Statins appear to be cholesterol-lowering drugs of first choice in secondary prevention • Diabetes counteracts lower risk usually present in women • Other therapeutic modalities are effective in secondary prevention – Antihypertensive treatment (SHEP/HOPE) – Aspirin – Beta-blockers • Estrogen replacement therapy NOT found to be effective in secondary prevention in women (HERS)
Multiple (2+) risk factors 10-year risk 10–20% LDL goal <130 mg/dL	• Clinical trials of LDL lowering generally are lacking for this risk category; rationale for therapy is based on extrapolation of benefit from men of similar risk • A large proportion of new onset CHD occurs in women who have clustering of risk factors and fall into this risk level • LDL-lowering drugs should be considered when LDL-C is ≥160 mg/dL after TLC • LDL-lowering drugs can be used when LDL-C remains at 130–159 mg/dL after TLC • Estrogen replacement therapy is not recommended for LDL lowering in post-menopausal women
Multiple (2+) risk factors 10-year risk <10% LDL goal <130 mg/dL	• Primary purpose of LDL-lowering therapy at this risk level is to reduce long-term (>10-year) risk for CHD • LDL-lowering drugs can be considered when LDL-C is ≥160 mg/dL after TLC diet. The aim is to reduce long-term risk for CHD • LDL-lowering drugs generally are not indicated when LDL-C is 130–159 mg/dL after TLC diet • Measurement of emerging risk factors in women with LDL-C 130–159 mg/dL that may raise risk to a higher level is optional • Estrogen replacement therapy is not recommended for LDL lowering in post-menopausal women
0–1 risk factor 10-year risk <10% LDL goal <160 mg/dL	• LDL-lowering drugs can be used when LDL-C is ≥190 mg/dL; the purpose is to reduce long-term risk • Drug therapy for LDL lowering is optional when LDL-C is 160–189 mg/dL after TLC diet • Because of low long-term risk, drugs may not be necessary when LDL-C is 160–189 mg/dL after TLC diet • Measurement of emerging risk factors that may raise risk to a higher level is optional • Estrogen replacement therapy is not recommended for LDL lowering in post-menopausal women

3. Older persons (men ≥65 years; women ≥75 years)

Most new CHD events and most coronary deaths occur in older persons (National Center for Health Statistics 1986). This is because older persons have accumulated more coronary atherosclerosis than younger age groups. Clinical trial data indicate that older persons with established CHD show benefit from LDL-lowering therapy (Scandinavian . . . Study Group 1994; Sachs et al., 1996; Long-Term Intervention . . . Study Group 1998). Therefore, benefits of intensive LDL lowering should not be denied to persons with CHD solely on the basis of their age.

To reduce the prevalence of CHD in older persons, risk factors should be controlled throughout life. Nonetheless, a high level of LDL cholesterol and low HDL cholesterol still carry predictive power for the development of CHD in older persons. ATP III re-affirms the position taken in ATP II that older persons who are at higher risk and in otherwise good health are candidates for cholesterol-lowering therapy. The difficulty in selection of older persons for LDL-lowering drugs lies in the uncertainties of risk assessment. Risk factors, particularly LDL cholesterol, decline in predictive power (Krumholz et al., 1994; Kronmal et al., 1993; Zimetbaum et al., 1992). For this reason, risk assessment by Framingham scoring may be less reliable in older persons. A partial solution to this problem is the measurement of subclinical atherosclerosis by noninvasive techniques. If an older person is found to have advanced coronary or systemic atherosclerosis, LDL-lowering therapy can be intensified even in the absence of clinical coronary symptoms (Kuller et al., 1994).

Beyond risk assessment, many other factors come into play in older persons that can affect the decision to employ LDL-lowering drugs. These include coexisting diseases, social and economic considerations, and functional age. If Framingham scoring is used to estimate risk in older persons, a more rational decision about initiation of cholesterol-lowering drugs may derive from an examination of the number needed to treat for benefit rather than from a given risk cutpoint (see Section II.7). Some special considerations that apply to different risk categories in older persons are summarized in Table VIII.3–1.

Table VIII.3–1. Special Considerations for Cholesterol Management in Older Persons (Men ≥65 years; Women ≥75 years)

Risk Level	Special Considerations
CHD and CHD risk equivalents 10-year risk >20% LDL Goal <100 mg/dL	• Sizable number of older persons were included in secondary prevention statin trials • Older persons respond similarly in risk reduction as do middle-aged persons • Guidelines for use of LDL-lowering drugs thus are similar in older and middle aged persons for secondary prevention • Prevalence of diabetes, a CHD risk equivalent, rises markedly in the older population • Clinical judgment assumes increased importance in choice of LDL-lowering therapies in older persons (see Section II.7; NNT for benefit in older persons)
Multiple (2+) risk factors 10-year risk 10–20% LDL Goal <130 mg/dL	• Risk assessment by standard risk factors probably less reliable in older persons; emerging risk factors (e.g., noninvasive assessment of subclinical atherosclerosis) may assist in risk estimation • LDL-lowering drugs can be considered in older persons when multiple risk factors are present and when LDL-C is ≥130 mg/dL on TLC diet • Management of other risk factors (e.g., smoking, hypertension, diabetes) has priority in older persons • Clinical judgment assumes increased importance in choice of LDL-lowering therapies in older persons (see Section II.7; NNT for benefit in older persons)
Multiple (2+) risk factors 10-year risk <10% LDL Goal <130 mg/dL	• LDL-C can be a target of drug therapy when LDL-C is ≥160 mg/dL to reduce short-term risk • However, risk assessment by standard risk factors probably less reliable in older persons; emerging risk factors (e.g., noninvasive assessment of subclinical atherosclerosis) may assist in risk estimation • Emphasis should be given to dietary changes that promote overall good health • Clinical judgment assumes increased importance in choice of LDL-lowering therapies in older persons (see Section II.7; NNT for benefit in older persons)
0–1 risk factor 10-year risk <10% LDL Goal <160 mg/dL	• Persons in this category have no risk factors other than age • Absolute short-term risk is relatively low • Very high LDL-C (≥190 mg/dL), after TLC diet, justifies consideration of drug therapy • High LDL-C (160–189 mg/dL) makes drug therapy optional • Clinical judgment assumes increased importance in choice of LDL-lowering therapies in older persons (see Section II.7; NNT for benefit in older persons)

Table VIII.4–1. Special Considerations for Cholesterol Management in Younger Adults (Men 20–35 years; Women 20–45 years)

Risk Level	Special Considerations
CHD and CHD risk equivalents 10-year risk >20% LDL Goal <100 mg/dL	• CHD is rare in this age group in the general population • Persons with heterozygous familial hypercholesterolemia (FH) may develop very premature CHD and deserve intensive LDL-lowering therapy; however, an LDL-C <100 mg/dL is often difficult to achieve in FH persons (combined LDL-lowering drugs usually are indicated) • CHD can occur in this age range in persons with type 1 diabetes or in very heavy cigarette smokers • In persons with type 1 diabetes without CHD, clinical judgment is required whether to set LDL-C goal <100 mg/dL
Multiple (2+) risk factors 10-year risk 10–20% LDL Goal <130 mg/dL	• Most younger adults without CHD will not reach a 10-year risk of 10–20% • In rare cases when this level of risk is achieved, LDL-lowering drugs can be employed to reach the LDL-C goal • Other risk factors should be vigorously controlled
Multiple (2+) risk factors 10-year risk <10% LDL Goal <130 mg/dL	• Two non-LDL-risk factors in a younger adult carry a high long-term risk • LDL-lowering drugs can be considered when LDL-C is ≥160 mg/dL after TLC diet • When LDL-C is <160 mg/dL, TLC should be applied intensively, combined with control of other risk factors
0–1 risk factor 10-year risk <10% LDL Goal <160 mg/dL	• In otherwise low-risk, younger adults who qualify for clinical management of elevated LDL-C, primary therapy is TLC • LDL-lowering drugs can be considered when LDL-C is ≥190 mg/dL after trial of TLC diet • When LDL-C is 160–189 mg/dL, drug therapy is optional; however, drug therapy should be avoided if the LDL-C can be reduced to near goal with TLC

4. Younger adults (men 20–35 years; women 20–45 years)

Special considerations when applying ATP III guidelines to young adults are outlined in Table VIII.4–1. In this age group, CHD is rare except for persons with severe risk factors, e.g., familial hypercholesterolemia, heavy cigarette smoking, and diabetes. Even though clinical CHD is relatively rare in young adults, coronary atherosclerosis in its early stages may be progressing rapidly. The rate of development of coronary atherosclerosis in young adulthood has been shown to correlate with the major risk factors. Long-term prospective studies further note that elevated serum cholesterol first observed in young adults predicts a higher rate of premature CHD in middle age (Anderson et al., 1987; Klag et al., 1993; Stamler et al., 2000). Thus, risk factor control in young adults represents an attractive aim for primary prevention (Cleeman and Grundy, 1997; Grundy 2000b).

ATP III recommends testing for lipids and lipoproteins beginning at age 20. There are several reasons for this recommendation (Grundy 2000b). First, early testing provides physicians with the opportunity to link clinical management with the public health approach to primary prevention; the finding of any risk factors in their early stages calls for the reinforcement of the public health message. Second, every young adult has the right to be informed if they are at risk for the development of premature CHD, even though clinical disease may be several decades away. Third, individuals with cholesterol levels in the upper quartile for the population are definitely at higher long-term risk, and life-habit intervention to control risk factors is fundamental.

Most young adults with very high LDL-cholesterol levels (≥190 mg/dL) are candidates for cholesterol-lowering drugs, even when they are otherwise at low risk with 0–1 risk factor and 10 year risk <10 percent. Although their 10-year risk may not be high, long-term risk will be high enough to justify a more aggressive approach to LDL lowering. ATP II set a higher cutpoint for initiation of cholesterol-lowering drugs (LDL cholesterol ≥220 mg/dL) in young adults than is being recommended in ATP III. The apparent safety of cholesterol-lowering drugs and growing evidence of the dangers of early onset LDL-cholesterol elevations have led the ATP III panel to recommend consideration of cholesterol-lowering drugs at an LDL cholesterol of ≥190 mg/dL in young adults. However, prudence in the initiation of cholesterol-lowering drugs is still indicated. In otherwise low-risk young adults it is acceptable to maximize TLC and to delay initiation of cholesterol-lowering drugs when the LDL cholesterol is in the range of 190 to 220 mg/dL, particularly in premenopausal women. Through the use of LDL-lowering dietary options, possibly combined with bile acid sequestrants, elevated LDL cholesterol in young adult men before age 35 and in premenopausal women usually can be normalized.

In young adults with LDL <190 mg/dL, ATP III guidelines applied to all adults are appropriate. Favorable changes in life habits should receive highest priority for management of elevated LDL cholesterol in young adults. Because of long-term risk, judicious use of drug therapy may be warranted in those who have LDL levels of 160–189 mg/dL and other risk factors. Nonetheless, the high costs and potential for side effects in the long term must always be kept in mind when considering cholesterol-lowering drugs.

5. Racial and ethnic groups

a. African Americans

African Americans have the highest overall CHD mortality rates and the highest out-of-hospital coronary death rates of any ethnic group in the United States, particularly at younger ages (Clark et al., 2001; Traven et al., 1996; Gillum et al., 1997; Gillum 1997). The earlier age of onset of CHD in African Americans creates particularly striking African American/white differences in years of potential life lost for both total and ischemic heart disease. Although the reasons for the excess CHD mortality among African Americans have not been fully elucidated, these can be accounted for, at least in part, by the high prevalence and suboptimal control of coronary risk factors.

Hypertension, left ventricular hypertrophy, diabetes mellitus, cigarette smoking, obesity, physical inactivity, and multiple CHD risk factors all occur more frequently in African Americans than in whites (Cutter et al., 1991; Hutchinson et al., 1997). The predictive value of most conventional risk factors for CHD appears to be similar for African Americans and whites (Cooper et al., 1996). However, the risk of death and other sequelae attributable to some risk factors (i.e., hypertension, diabetes) is disproportionately greater for African Americans (Cooper et al., 1996; Liao et al., 1995; Gavin 1995). The Framingham risk assessment algorithm appears to have the same predictive value in African Americans as in whites. Nonetheless, among the risk factors, some differences have been observed between African Americans and whites. These differences are highlighted in Table VIII.5–1. Although ATP III guidelines generally are applicable equally to African Americans and whites, differences in risk factors and/or genetic constitution call for special attention to certain features of risk management in African Americans (Table VIII.5–2).

Table VIII.5–1. Special Features of CHD Risk Factors in African Americans

Risk Factor	Special Features
LDL	• Mean LDL levels slightly lower and high LDL levels slightly more common in African American men compared to white men • LDL levels similar in African American and white women • Relationship between total cholesterol levels and CHD risk similar between African American and white men (MRFIT study) • African American men often have a relatively high baseline but still normal level of creatine kinase that should be documented before starting statin therapy
HDL	• Mean HDL levels are higher in African American men than in white men. Whether higher HDL levels in African American men protect against CHD is not known • HDL levels are similar between African American and white women
Triglycerides	• Triglyceride levels are lower in African American men and women than in white men and women
Lipoprotein (a)	• Lp(a) levels are higher in African American men and women than in white men and women • Whether higher Lp(a) in African Americans increases risk for CHD is not known
Hypertension	• Hypertension is more common in African Americans than in whites • Hypertension is a more powerful risk factor for CHD and CVD in African Americans than in whites* • Left ventricular hypertrophy (LVH) is more common in African Americans • LVH is a powerful predictor of cardiovascular deaths in African Americans† • LVH is considered to be a direct target of therapy and does not modify the LDL goal in ATP III‡
Obesity	• Obesity and abdominal obesity are twice as common in African American women compared to white women • Obesity is similar in African American and white men
Diabetes	• Type 2 diabetes is more common in African Americans than in whites • The higher prevalence of type 2 diabetes in African Americans appears related to more obesity and to genetic propensity
Multiple Risk Factors	• African Americans are 1.5 times more likely to have multiple risk factors than are whites—possibly related to more obesity in African Americans

* Hypertension is not given extra weight in Framingham scores in African Americans despite its greater power to predict CHD. Clinical judgment should be used to correct for this difference (Grundy et al., 2001a; D'Agostino et al., 2001).

† LVH is not included in Framingham scoring because of difficulty in estimation and confounding with hypertension.

‡ For ATP III, it is uncertain that LDL lowering will offset the high risk accompanying LVH.

Table VIII.5–2. Special Considerations for Cholesterol Management in African Americans

Risk Level	Special Considerations
CHD and CHD risk equivalents 10-year risk >20% LDL Goal <100 mg/dL	• African Americans with established CHD are at particularly high risk for cardiac death (reasons: LVH, more diabetes, and lack of access to health care) • Goals for LDL-lowering therapy same for African Americans and whites
Multiple (2+) risk factors 10-year risk 10–20% LDL Goal <130 mg/dL	• Hypertension is a particularly powerful risk factor for CHD in African Americans • If hypertension is present, check for LVH • Risk factor clustering more prevalent in African Americans than whites • LDL-lowering drugs warranted when LDL-C is >130 mg/dL after trial of TLC diet
Multiple (2+) risk factors 10-year risk <10% LDL Goal <130 mg/dL	• Particular attention should be given to detection and control of hypertension • Goals for LDL lowering are those outlined in ATP III for this category
0–1 risk factor 10-year risk <10% LDL Goal <160 mg/dL	• Goals for LDL lowering are those outlined in ATP III for this risk category

b. Hispanic Americans

The Hispanic population in the United States is a heterogeneous group with national origins or ancestry that may be Puerto Rican, Cuban, Mexican/Mexicano, Mexican American, Chicano, other Latin American, or other Spanish. Hispanics are the second largest minority group in the continental United States, comprising 22.4 million people, and increasing at a rate five times that of the rest of the United States. It has been estimated that by the early 21st century, Hispanics will become the largest minority group in the United States. CHD and cardiovascular disease mortality are approximately 20 percent lower among adult Hispanics than among whites in the United States (Liao et al., 1997; Sorlie et al., 1993; Wei et al., 1996). This is true despite a less favorable cardiovascular risk profile among Hispanics, who on average have a greater prevalence of diabetes, more obesity, a tendency towards central obesity, and lower HDL-cholesterol and higher triglyceride levels (Sundquist et al., 2001; Sundquist and Winkleby, 1999; Winkleby et al., 1999). Hispanics on average have higher CHD risk scores than non-Hispanic whites (Winkleby et al., 1999), but the Framingham algorithm has not been validated in this group. A comparison with Puerto Rican Hispanics indicates that Framingham scoring overestimates actual risk (Grundy et al., 2001a; D'Agostino et al., 2001). Some have referred to this as the "Hispanic paradox" (Markides and Coreil, 1986). However, even though Hispanics appear to have lower

than expected mortality from CHD and CVD, the proportion of total deaths due to these two diseases is similar to that for whites in the United States and one cannot conclude that Hispanics are protected from CHD or that they should be treated less aggressively than other groups. The reasons for these differences are unclear.

In summary, despite limited data suggesting some differences in baseline risk between Hispanic and white populations, the ATP III panel concludes that the evidence for differences is not strong enough to justify separate guidelines for Hispanic populations. For this reason, no separate algorithm for lipid management is recommended and the same guidelines and risk stratification groupings are appropriate for Hispanics as for other populations.

c. Native Americans (American Indians)

When the Strong Heart Study was initiated in 1988 to investigate cardiovascular disease and its risk factors in diverse groups of Native Americans (American Indians) in the United States, prevalence data from the initial examination suggested that at least some Native American tribal groups had lower rates of myocardial infarction and CHD than other U.S. groups (Howard et al., 1999; Howard et al., 1995; Oopik et al., 1996). However, recent data from the Indian Health Service indicate that CVD mortality rates vary among the American Indian communities and appear to be increasing (Howard et al., 1999; Howard et al., 1995; Oopik et al., 1996; Welty et al., 1995). CHD incidence rates among Native American men and women were almost twice as high as those in the biracial Atherosclerosis Risk in Communities Study (Howard et al., 1999) and CHD appeared more often to be fatal. The significant independent predictors of CVD in Native American women were diabetes, age, obesity, LDL, albuminuria, triglycerides, and hypertension. In men the significant predictors of CVD were diabetes, age, LDL, albuminuria, and hypertension. Interestingly, and unlike other ethnic groups, Native Americans appear to have an increasing incidence of CHD, possibly related to the high and increasing prevalence of diabetes in these communities. At a recent NHLBI workshop on risk assessment, the cardiovascular risk score in Native American women appeared to overestimate actual risk (Grundy 2001a; D'Agostino et al., 2001). Although no separate algorithm for lipid management should be recommended for Native Americans, efforts to reduce cholesterol and other CHD risk factors in this population are especially important because of the higher CHD incidence and the suggestion of apparently higher associated mortality rates. The importance of LDL cholesterol as a contributor to CHD in this group should not be underestimated merely because total and LDL-cholesterol levels are lower than the U.S. average. Moreover, because of the high frequency of type 2 diabetes, many Native Americans will have an even lower LDL goal.

In summary, despite limited data suggesting some differences in baseline risk between Native American and white populations, the ATP III panel concludes that the evidence for differences is not strong enough to justify separate guidelines for Native American populations. Consequently no separate algorithm for lipid management is recommended and the same guidelines and risk stratification groupings are appropriate for Native Americans as for other populations.

d. Asian and Pacific Islanders

There is limited information on the risks and benefits of lipid management for reduction of CHD and CVD in this population. The Honolulu Heart Program is an ongoing prospective study of CHD and stroke in a cohort of Japanese American men living in Hawaii (Abbott et al., 1997; Goldberg et al., 1995). In this study, CHD and CVD mortality rates are lower than in the general U.S. population, and the Framingham risk scoring system appears to overestimate actual risk.

Even so, despite limited data suggesting some differences in baseline risk between Asian and Pacific Islanders and American white populations, the ATP III panel concludes that the evidence for differences is not strong enough to justify separate guidelines for Asian Americans and Pacific Islander populations. Therefore, no separate algorithm for lipid management should be recommended and the same guidelines and risk stratification groupings are appropriate for Asian Americans and Pacific Islanders as for other populations.

e. South Asians

South Asians are a rapidly growing population in the United States. There has been some special interest in this group because they have been reported to have very high prevalence rates of coronary disease at younger ages in the absence of traditional risk factors (Enas et al., 1998). The higher CHD risk in this population may be related in part to a higher prevalence of insulin resistance, the metabolic syndrome, and diabetes. Lipoprotein (a) levels have also been reported to be elevated (Anand et al., 1998) although its contributions to the observed increased CHD risk are unclear. Efforts to reduce cholesterol and other CHD risk factors in this group with South Asian Indian ancestry appear to be especially important.

In summary, a growing body of evidence indicates that South Asians are at high baseline risk for CHD, compared to American whites. They are particularly at risk for the metabolic syndrome and type 2 diabetes. For this reason, the ATP III panel advises that special attention should be given to detection of CHD risk factors in South Asians. Also, increased emphasis should be given to life habit changes to mitigate the metabolic syndrome in this population. Otherwise, cholesterol management guidelines are the same as those for other population groups.

IX. Adherence

Despite accumulating evidence of the benefits of LDL lowering over the past two decades, initiation of treatment and long-term adherence to therapy remain far from optimal. Lack of adherence is causing persons to miss the risk-reducing benefit of treatment, and is creating enormous costs in the health system to treat cardiovascular events that could have been prevented. Clinical trials have demonstrated that LDL-lowering therapy can reduce all major adverse manifestations of CHD. Clinical trials also have shown that the amount of risk reduction achieved (Coronary Drug Project Research Group 1980; Lipid Research Clinics Program: II 1984; Compliance and adverse event . . . Study 1997) is related to the level of adherence with treatment. Adherence to lipid management in the United States, as well as cardiovascular preventive therapy in general, is less than desirable, as reflected in the following findings:

- Less than half of persons who qualify for any kind of lipid-modifying treatment for CHD risk reduction are receiving it (Schrott et al., 1997; Harnick et al., 1998; Frolkis et al., 1998; Pearson et al., 2000; Hoerger et al., 1998).
- Less than half of even the highest-risk persons, those who have symptomatic CHD, are receiving lipid-lowering treatment (Schrott et al., 1997; Harnick et al., 1998; Frolkis et al., 1998; Pearson et al., 2000; Hoerger et al., 1998).
- Only about a third of treated persons are achieving their LDL goal; less than 20 percent of CHD patients are at their LDL goal (Pearson et al., 2000; Hoerger et al., 1998).
- Only about half of the persons who are prescribed a lipid-lowering drug are still taking it six months later; after 12 months this falls to 30–40 percent of persons (Simons et al., 1996). This is especially disconcerting, since it takes 6 months to 1 year before a benefit from treatment becomes apparent.

Unfortunately, guidance from the available literature as to what should be done about the adherence problem is sparse. A recent, rigorous search of the world's literature to identify interventions proven to help persons follow prescription medications uncovered a total of 4,762 citations (Haynes et al., 1999). Of these, just 19 met the criteria of an unconfounded randomized clinical trial, a standard to which all of our important decisions in health care are held. The panel of experts that reviewed this data concluded that current methods of improving adherence with chronic health problems are not very effective, and that there is little evidence that medication adherence can be improved consistently.

Poor adherence with lipid-modifying therapy threatens the success of any set of recommendations. The recommendations contained in this document are being made on the premise that a sustained reduction in serum LDL cholesterol levels will be accompanied by a reduction in CHD events. For this benefit to be realized, treatment will have to be continued for years and probably for the duration of the patient's life. Thus, paying attention to ways of improving adherence with treatment is just as important to the ultimate success of these guidelines as are the rudiments of the guidelines themselves. Health professionals are encouraged to review the material that follows for guidance on how they may address adherence issues in their daily practice.

1. Recurrent themes and perspectives

A review of the adherence literature reveals recurrent themes and perspectives that provide insights about the adherence problem and suggest ways of dealing with it effectively. Some of these perspectives are listed below:

1. Most people do not successfully self-administer medical treatments as prescribed without some intervention designed to enhance adherence.
2. Adherence is not related to gender, age, ethnic or socioeconomic characteristics of patients. The young are just as likely to be as non-adherent as the elderly; the wealthy just as likely as the poor; males as much as females. There are no differences in adherence rates among African Americans, Hispanic Americans, Asian Americans, and Anglo-Saxon Americans. The causes of non-adherence transcend these differences among people.
3. There is no one cause of poor adherence. Different causes are invariably operating in any group of persons given the same regimen for the same reason. For example, for some persons the cost of the prescription is critically important in determining adherence, but for the majority it is not. Some people forget to take their doses. Others do not believe that they are sick enough to require drug treatment. Still others fear side effects from their treatment. The list of reasons goes on. Since there is no single cause of poor adherence, there is not likely to be any one intervention that will improve adherence in all persons.
4. Patient counseling and written instructions appear to have the greatest impact on improving short-term adherence (e.g., with antibiotic drug regimens) but less impact on long-term regimens.
5. Poor adherence is just as much of a problem in persons with symptomatic illnesses (e.g., epilepsy and diabetes) as it is with asymptomatic disorders (e.g., hypertension and hyperlipidemia).
6. Initial good adherence with therapy does not mean that the patient will continue to be adherent.
7. If a patient admits non-adherence with therapy, he/she is usually telling the truth, but if a patient denies non-adherence, he/she is telling the truth about half the time.
8. A certain consistent proportion of persons (probably about one-third) will be adherent with therapy just by being given a prescription and asked to take it by their physicians. Another proportion of individuals (probably about 15–25 percent) will be non-adherent with therapy, even with the most vigorous interventions. Interventions to improve adherence, then, are optimally aimed at the middle 50 percent of individuals who may adhere if given support and encouragement.
9. Practically any intervention appears to improve adherence. Rarely are interventions not effective in improving medication adherence, at least for a while. This suggests that the increased attention paid to adherence and/or to the patient by a provider may be as important as the intervention itself.
10. Medication-taking is a behavior that must be learned. Not all individuals have the skills, support structure, or belief system to adopt this behavior without help.
11. Physicians and other health providers have little training in behavioral modification techniques, and do not naturally apply behavioral change principles to improving medication-

taking behavior. That is, physicians and other professionals need training in adherence-improving strategies.

12. Many primary care providers and other health professionals spend little time in their practices to provide interventions to encourage adherence with therapy.
13. There are too few incentives built into the health delivery system (e.g., compensation) to encourage and support health professionals to address poor adherence among patients.
14. Interventions to improve adherence must be sustained and reinforced. Interventions to improve adherence last only as long as they are provided. If the intervention is discontinued, even if the patient is fully adherent at the time, adherence will deteriorate.
15. Most successful interventions, especially for long-term drug therapies, use multiple approaches simultaneously.
16. The more patients are asked to do, the less likely they will be to do it all. Rather, they will choose what they are willing to do. This may not be the optimal choice.
17. Adherent behavior reduces morbidity and mortality, even among placebo-treated individuals (Horwitz and Horwitz, 1993). This suggests that the patient who takes steps to improve his/her health achieves a better outcome than the patient who does not.

2. Interventions to improve adherence

The list of evidence-based approaches for improving adherence has been organized under interventions focused on the patient, health professionals, and the health delivery system. In the final analysis, the most successful plan to improve adherence will likely use approaches from all three categories.

Each health professional should use this list to develop a plan for encouraging adherence by patients in their practice and managing poor adherence by those who fail to achieve treatment goals. An important component of the plan will be to identify what the primary care provider will do to encourage adherence, and how other health professionals, resources and systems can support and augment this initiative. Another important component of the plan will be how to weave adherence-improving approaches into the ongoing daily process of caring for patients.

a. Interventions focused on the patient

Following is a list of practical recommendations for improving adherence that are focused on the patient. (See Table IX.2–1 and the discussion below). A combination of approaches shown in Table IX.2–1 can be used for maximal effectiveness. For maximal efficiency, the health professional should focus the greatest attention on individuals whose lipid control is inadequate due to poor adherence.

1) Simplify medication regimens

Taking medications once daily, rather than three to four times a day, enhances adherence with the regimen (Baird et al., 1984; Brown et al., 1997). As well, keeping the number of drugs in the regimen to a bare minimum is important. This may be particularly important in the patient with multiple risk factors or CHD where 6–12 medications are often prescribed. In these

circumstances, the clinician should thoughtfully consider what therapy is a must and then negotiate with the patient about what they are willing to take. Compromise here may not provide optimal therapy, but prescribing too many medications will lead to poor adherence with all medications and not achieve any of the therapy goals.

2) Provide explicit patient instruction and use good counseling techniques to teach the patient how to follow the prescribed treatment

Persons must understand what is expected of them in order to do it. A number of studies affirm this principle and have illustrated that patient instruction is far more than just giving patients some information (Becker et al., 1986; Colcher and Bass, 1972; Sackett et al., 1975). If the goal is to change or reinforce adherence behavior, the instruction needs to be constructed with this goal in mind. Following are suggestions to impart behaviorally-based instruction:

- Begin with an assessment of the patient's current understanding. Identify the patient's concerns and misunderstandings. Determine what the patient has already tried to do about their cholesterol problem, what problems they encountered, and how they sought to overcome these problems.
- Determine what benefit the patient expects to receive from the treatment. Reinforce or amplify these expectations.
- Negotiate cholesterol and dietary goals with the patient. Select short- and long-term goals, and set timelines for achieving the short-term goals.
- Provide explicit instruction on a low-fat diet, including how to shop for foods, how to select foods when eating out, and how to order foods while traveling. This is often best accomplished by a dietitian or a nurse.
- Provide explicit instruction on how to take lipid-modifying medications. Emphasize the need for continued treatment for CHD risk reduction. Reassure the patient about the safety of the regimen (if appropriate). Emphasize the potential benefits of treatment. Attempt to link these benefits to the LDL level, which provides the patient with a measure with which to track progress.
- Make adherence with therapy an ongoing topic of discussion. Inform the patient that you will be asking about this at each visit and will want to explore ways to help overcome any problems encountered.
- Make instructions concise and reinforce them with written materials or Web-based information.
- Take time to answer the patient's questions. Verify that the patient understands the instructions.

3) Encourage the use of prompts to help persons remember treatment regimens

Forgetfulness is one of the most common reasons given by patients for not taking medications. Most persons will have to identify ways to prompt them to take medications (Becker et al., 1986; Sackett et al., 1975; Haynes et al., 1976; Logan et al., 1979; Peterson et al., 1984). Following are a few approaches that have been tried and proven successful:

- Integrate medication doses with other daily activities, such as meals and bedtime.

- Use alarms on clocks or watches to signal dosing times.
- Use special medication packing (e.g., pill boxes) to organize medications.
- Phone persons to remind them of medication refills.
- Phone persons or send postcards to remind them of return appointments.

4) Use systems to reinforce adherence and maintain contact with the patient

A variety of systems have been used to enhance adherence with low-fat diets as well as lipid-modifying medications (Robinson et al., 2000; Kirkman et al., 1994; Friedman et al., 1996; Raynor et al., 1993; Ornstein et al., 1991; Taylor et al., 1990). One simple and inexpensive way is to have the office nurse or dietitian phone the patient between appointments to review information on the treatment regimen, solve problems being experienced by the patient, answer questions, and reinforce adherence behavior. Telemedicine is particularly important to use when the time between appointments is protracted. Another option is a computer link via the patient's phone so that patients can report their home blood pressure recording. Health professionals can also check with patients about their understanding of medication regimens, inquire about adherence, and provide information and instructions. It is quite conceivable that Web-based systems and e-mail can be effectively used to send and receive messages with the patient that reinforce adherence and maintain contact with the patient.

5) Encourage the support of family and friends

The power of the "significant other" in influencing the patient's behavior is substantial and can be used to advantage in encouraging adherence with a treatment regimen. A spouse or special friend who is taught about the patient's therapy, and becomes an advocate to reinforce adherence behavior and help solve problems, has been shown to be effective (Daltroy and Godin, 1989; Bovbjerg et al., 1995; Morisky et al., 1983). Obviously, this must be done with the patient's permission and acceptance. In some circumstances, getting the family or friends involved can have adverse effects.

6) Reinforce and reward adherence

Reinforcing the importance of lipid control and providing rewards for progress are two of the most powerful methods of achieving treatment goals (Sackett et al., 1975; Haynes et al., 1976). Most commonly, reinforcement is accomplished by asking about adherence at each visit, reviewing lipid results at followup visits, and charting the patient's progress toward achieving their treatment goals. It is best to avoid giving negative feedback in these settings; rather, recognizing even small positive changes is more likely to encourage larger positive changes. When persons achieve short-term goals, it is important to acknowledge (i.e., reward) it. Most often, reward is simply the praise of the health professional. In some cases, rewards may be tangible, such as points toward a free cholesterol evaluation or home test system. Studies have shown these to be powerful methods for encouraging adherence behavior as well as achieving improved outcomes (Haynes et al., 1976).

7) Increase patient visits for persons unable to achieve treatment goal

See patients more often when they are struggling to get their cholesterol under control, and less often when their control is good. Always call patients who miss appointments.

8) Increase the convenience and access to care

Although it may be impractical to many providers, studies have shown that when care is provided at the worksite or during home visits to improve access and convenience of care, adherence with therapy is improved (Sackett et al., 1975; Haynes et al., 1976; Logan et al., 1979; Morisky et al., 1983).

9) Involve patients in their care through self-monitoring

Involving the patient in their treatment through self-monitoring is another powerful way to improve adherence (Oldridge and Jones, 1983; Baker and Kirschenbaum, 1993; Edmonds et al., 1985). In this manner persons can follow firsthand their response to treatment and their progress toward achieving and maintaining treatment goals. They can also observe the consequences of nonadherence.

b. Interventions focused on the physician and medical office

As indicated above, many persons with a lipid disorder who qualify for treatment are not receiving it from their physicians. Generally this is not due to the physician's lack of familiarity or agreement with the NCEP guidelines, their interest, or their intent to successfully implement them (Cabana et al., 1999; McBride et al., 2000). Instead, barriers exist which impede treatment, including the physician's lack of confidence in treating certain lipid disorders and implementing certain elements of treatment—especially diet and exercise therapy; inertia in making fundamental changes in current practice patterns; contradictory patient preferences; and time constraints (Cabana et al., 1999).

Generally, when given assistance, physicians are receptive to making changes in their practice and improving preventive health services (McBride et al., 2000; Maly et al., 1996; Ockene et al., 1996; Kottke et al., 1992; Ockene et al., 1999). They are especially motivated to change if their patients request these services, if they perceive a legal liability, if peers or thought-leaders advocate these services, and if they perceive that treatment is cost-effective (Maly et al., 1996). Given a readiness to change, the question is what the more effective ways are to encourage physicians to make changes in their daily practices to improve adherence with therapy. Some of the more important interventions are summarized below and listed in Table IX.2–1.

1) Teach physicians to implement lipid treatment guidelines

Although traditional CME programs that use lectures and conferences to teach physicians rarely change professional practice (Davis et al., 1995), they can increase awareness and motivate physicians to learn more specific approaches to therapy. Moreover, when physician-training programs supply important background material (i.e., science) and guidance on ways to implement treatment guidelines into everyday practice, they are more likely to influence practice.

For example, when training programs provide the physician with enabling strategies (e.g., office reminders), reinforcing strategies (e.g., feedback) and predisposing strategies (e.g., practice guidelines), improvements in the quality of practice are more commonly seen. Some of these strategies are reviewed below (Maly et al., 1996).

2) Use reminders to prompt physicians to attend to lipid management

Reminders have been used successfully to prompt physicians to attend to lipid issues (Davis et al., 1995; Ockene et al., 1997). This may be as simple as placing a brightly-colored sticker identifying the patient as a cholesterol patient or a sheet of paper on the front of the chart with information about the patient's lipid results, treatment status, or a definitive recommendation for care (Stamos et al., 1999). Electronic medical records have the potential to prompt (i.e., require) the physician to act on lipid results or needed treatment issues as a part of each office visit.

3) Identify a patient advocate in the office to help deliver or prompt care

Many studies have demonstrated the value of assigning an individual in the office the responsibility of keeping track of the patient's progress, and prompting or augmenting the care provided (McBride et al., 2000; Ockene et al., 1996; Kottke et al., 1992; Ockene et al., 1999; Ockene et al., 1997; Dietrich et al., 1992). In fact, this organizational change may be one of the more powerful ways of advancing preventive care in the average busy office setting. This individual is usually an office nurse who is able to work additional hours to assume this new role; occasionally, new part-time personnel will need to be hired. The advocate reviews the patient chart, extracts critical information, summarizes it and prompts the physician to attend to certain issues, provides patient information and consultation, reinforces treatment plans, and follows up with patients between scheduled visits by phone or e-mail. Most physicians who have worked with a patient advocate recognize the vital importance of this role in providing preventive services.

4) Use patients to prompt preventive care

Physicians typically respond to a patient's request for health services (Maly et al., 1996). Using this premise, several programs have given the patient access to information about their lipid disorder not only to inform them, but also to motivate them to request preventive health services (Davis et al., 1995). This approach also has the advantage of transferring responsibility for health-seeking behavior into the hands of the patient. An important part of this approach is to identify sources of accurate information the patient can use to learn more about their health. The Web sites of the NCEP and American Heart Association are recommended.

5) Develop a standardized treatment plan to structure care

Some physicians work better if they follow a structured plan or treatment algorithm when providing lipid management (Finnerty et al., 1973). One advantage of following such a plan is that it is standardized, and should therefore assure consistency and completeness in the care delivered. It should prompt the physician to attend to all key issues during routine follow-up appointments, including evaluation of the patient's adherence with treatment. Of course,

following a standardized treatment plan does not mean that the physician cannot deviate from it when needed.

6) Use feedback from past performance to foster change in future care

Routine review of a select number of patient charts can provide important feedback about the care being provided to lipid patients, and prompt improvements in care if needed. Charts selected for this review should be those of high-risk patients, such as individuals with a history of myocardial infarction or diabetes. The audit may be another way of using the services of a patient advocate (discussed above). Key issues to extract from the charts include:

- Did the patient have a recent lipid profile?
- If the patient qualifies for treatment, was treatment provided?
- If treatment was given, is the patient at their LDL goal?
- Did the physician document his/her assessment and plans?

Routinely receiving feedback such as this serves to inform the physician about how well he/she is doing with lipid management, and directs attention to ways of enhancing this service. It may also serve as important information for marketing the physician's services to health insurance plans and employer groups.

7) Remind patients of appointments and follow-up missed appointments

Many lipid patients are lost to followup, and thus do not receive the services they require to successfully reduce CHD risk. Every physician's office should have a system of tracking patients to assure that all have return appointments and that follow up is provided to persons who miss appointments. It is important to give patients a followup appointment before they depart the office and to send a reminder card or call about a week before the appointment. It is also recommended that the office nurse or patient advocate be given the opportunity to schedule followup visits with the patient to reinforce education and support treatment adherence. When a patient misses a followup appointment, someone in the office should be given the responsibility of trying to reschedule the patient.

c. Interventions focused on the health delivery system

Interventions that are focused on the health delivery system have also been shown to improve patient adherence. Compared with interventions focused on the patient and physician, these interventions have produced the greatest improvement in patient adherence and have sustained this improvement for a long period of time. Further, they have improved both adherence with treatment and outcomes. Some of the more important of these interventions are summarized below and listed in Table IX.2–1.

1) Provide lipid management through a lipid clinic

Establishment of a lipid clinic makes the most sense in health systems where there are a large number of persons, some of whom have very complicated and unique lipid disorders, such as

may be found in large primary care group practices and institutions. For example, lipid clinics are commonplace in many Department of Veterans Affairs Medical System institutions. Lipid clinics are typically run by a supervising physician who has often obtained additional training in managing lipid disorders, and are staffed by pharmacists, nurses, and/or dietitians who provide patient care in a multidisciplinary fashion. Other physicians in the health care system refer selected patients for lipid management. The process of care is frequently well defined by a protocol, and a quality control system gives health care providers feedback on their performance. Patient care goals are clear: get referred patients an effective treatment, give them support to adhere to it, and achieve NCEP treatment goals. Perhaps it is this simplicity of purpose and focus that have resulted in reports of very good adherence by persons with prescribed therapy and achievement of treatment goals (Brown and Cofer, 2000; Shaffer and Wexler, 1995; Stuart-Shor et al., 1999; Schectman et al., 1996; Belcher 1990). For example, one lipid clinic which provided care exclusively to CHD patients reported that 100 percent of persons were on lipid-lowering therapy, 97 percent had lipid levels documented in medical records, and 71 percent met their LDL goal of <100 mg/dL (Brown and Cofer, 2000). Lipid clinics have easily outperformed the usual care models in lowering LDL and getting persons to their NCEP goal (Shaffer and Wexler, 1995; Schectman et al., 1996; Belcher 1990). However, the lipid clinic is a more expensive model of care (Schectman et al., 1996) that may not be available to all patients, but these clinics can be especially valuable for patients with complex lipid disorders.

2) Utilize case management by nurses

Closely related to the lipid clinic concept is case management by nurses. A number of such models have been described in the literature, and compare very favorably to other models of care in terms of treatment outcomes, lipid control, and patient adherence (Becker et al., 1998; Logan et al., 1979; Hoogwerf et al., 1999; Mundinger et al., 2000; Runyan 1975; Debusk et al., 1994; Basgardi 1999). In these models, some (or all) of the elements of care are provided by specially-trained nurses. In some instances, care is delivered by nurses at the worksite, in the home, or in the community; and in other cases, a clinic or hospital outpatient setting. Often, there is a strong emphasis on lifestyle modification (i.e., smoking cessation, exercise training, weight loss, and nutrition counseling) in addition to lipid-modifying drug therapy. Treatment is often guided by a written protocol. Nurses in these settings deliver care that is typically provided by physicians, including conducting medical histories and physical exams; collecting and interpreting laboratory tests; and selecting and titrating medications. All case management models describe strong patient counseling and follow-up monitoring components. Comparison of nurse case management versus usual care models have shown the nurse care model to be at least equivalent, and in some cases superior, in terms of LDL lowering and achievement of treatment goals. No cost-effectiveness comparisons have been made.

3) Deploy telemedicine

As noted above, phone follow-up of patients between scheduled physician visits has been successfully used to improve adherence (Robinson et al., 2000; Kirkman et al., 1994; Friedman et al., 1996). This is a very accessible, relatively inexpensive way to maintain a link with the patients and to manage problems that deter adherence as they arise. Reports indicate that groups using this approach have seen improvement in LDL reduction and achievement of treatment goals.

4) Utilize the collaborative care of pharmacists

Collaborative care by pharmacists is a model in which community pharmacists, working in their pharmacies, collaborate with primary care providers to augment the care provided to persons with lipid disorders. In this model, pharmacists see persons during medication refills or by appointment, to reinforce the importance and purpose of therapy, provide patient education on lifestyle and pharmacologic therapy, emphasize the need for adherence, identify and resolve barriers to adherence, and provide long-term monitoring of drug response and feedback to the patient between visits to the primary care provider. During these visits, pharmacists commonly measure the patient's blood pressure or blood lipids utilizing desktop analyzers. This allows pharmacists to give the patient feedback on their progress and reinforce the steps to achieving treatment goals. Services are documented, and summaries are sent to the patient's primary provider to inform him/her of the pharmacist's findings and actions. These models have proved to be among the strongest for maintaining persons on treatment and achieving treatment goals (Carter et al., 1997; McKenney et al., 1973; Bluml et al., 2000). For example, one study of pharmacists' collaborative care reported that 94 percent of persons persisted on therapy (i.e., stayed on lipid-lowering treatment at least to some degree), 90 percent of persons were considered adherent with prescribed medications, and 63 percent had reached and were maintained at their NCEP LDL goal for a period of two years (Bluml et al., 2000).

5) Execute critical care pathways in hospitals

Use of clinical pathways or other management protocols in hospital settings has resulted in improved adherence to therapy by CHD patients and better cholesterol control (Fanarow and Gawlinksi, 2000). The Cardiac Hospitalization Atherosclerosis Management Program (CHAMP) focused on the initiation of therapy with aspirin, beta blocker, ACE inhibitor, statin, diet, and exercise in persons with established CHD prior to hospital discharge. The program used post-discharge follow-up visits to titrate the statin dose to achieve an LDL of <100 mg/dL. One year after discharge, 91 percent of persons were being treated with cholesterol-lowering therapy and 58 percent were at treatment goals; these results suggest that initiating treatment during hospitalization for CHD adds needed emphasis to the importance of cholesterol-lowering treatment alongside other cardiac medications.

Table IX.2–1. Interventions to Improve Adherence

Focus on the Patient (utilize as many as possible) • Simplify medication regimens • Provide explicit patient instruction and use good counseling techniques to teach the patient how to follow the prescribed treatment • Encourage the use of prompts to help patients remember treatment regimens • Use systems to reinforce adherence and maintain contact with the patient • Encourage the support of family and friends • Reinforce and reward adherence • Increase patient visits for persons unable to achieve treatment goal • Increase convenience and access to care • Involve patients in their own care through self-monitoring
Focus on the Physician and Medical Office • Teach physicians to implement lipid treatment guidelines • Use reminders to prompt physicians to attend to lipid management • Identify a patient advocate in the office to help deliver or prompt care • Use patients to prompt preventive care • Develop a standardized treatment plan to structure care • Use feedback from past performance to foster change in future care • Remind patients of appointments and followup on missed appointments
Focus on the Health Delivery System • Provide lipid management through a lipid clinic • Utilize case management by nurses • Deploy telemedicine • Utilize the collaborative care of pharmacists • Execute critical care pathways in hospitals

Table IX.2-2. The Clinicians Abridged Pocket Guide to Enhancing Adherence

• Keep the regimen as simple as possible • Give the patient clear instructions • Discuss adherence for at least a few seconds at each visit • Concentrate on those who don’t reach treatment goals • Always call patients who miss visit appointments • Use 2 or more strategies for those who miss treatment goals

List of Studies

4S .....Scandinavian Simvastatin Survival Study (Scandinavian Simvastatin Survival Study Group 1994)

ACAS.....Asymptomatic Carotid Atherosclerosis Study (Executive Committee for the Asymptomatic Carotid Atherosclerosis Study 1995)

AFCAPS/TEXCAPS .....Air Force/Texas Coronary Atherosclerosis Prevention Study (Downs et al., 1998)

ALLHAT.....Antihypertensive and Lipid Lowering Treatment to Prevent Heart Attack Trial (Davis et al., 1996)

ARIC .....Atherosclerosis Risk in Communities (Bensen et al., 1999)

AVERT .....Atorvastatin Versus Revascularization Trial (Pitt et al., 1999)

BECAIT .....Bezafibrate Coronary Atherosclerosis Intervention Trial (Ericsson et al., 1996)

beFIT.....Boeing Employees Fat Intervention Trial (Walden et al., 2000)

BIP .....Bezafibrate Infarction Prevention (Bezafibrate Infarction Prevention [BIP] Study 2000)

CARE.....Cholesterol and Recurrent Events Trial (Sacks et al., 1996)

CARET .....Beta-Carotene and Retinol Efficacy Trial (Omenn et al., 1996)

CARS .....Coronary Artery Regression Study Group (Tamura et al., 1997)

CASANOVA .....Carotid Artery Stenosis with Asymptomatic Narrowing: Operation Versus Aspirin (The CASANOVA Study Group 1991)

CCAIT.....Canadian Coronary Atherosclerosis Intervention Trial (Waters et al., 1994)

CDP.....Coronary Drug Project (Coronary Drug Project Research Group 1975)

CHAOS .....Cambridge Heart Antioxidant Study (Stephens et al., 1996)

CIS .....Multicenter Coronary Intervention Study (Bestehorn et al., 1997)

CLAS .....Cholesterol Lowering Atherosclerosis Study (Blankenhorn et al., 1987)

CURVES.....Comparative dose efficacy study of atorvastatin versus simvastatin, pravastatin, lovastatin and fluvastatin in patients with hypercholesterolemia (Jones et al., 1998)

DAIS .....Diabetes Atherosclerosis Intervention Study (DAIS Investigators 2001)

DART.....Diet and Reinfarction Trial (Burr et al., 1989)

DCCT.....Diabetes Control and Complications Trial (Diabetes Control and Complications Trial 1993)

DELTA .....(Ginsberg et al., 1998)

DISC .....Dietary Intervention Study in Children (Obarzanek et al., 1997)

ECST.....European Carotid Surgery Trial (Barnett et al., 1998; Randomised trial . . . carotid stenosis 1998)

EXCEL.....Expanded Clinical Evaluation of Lovastatin (Bradford et al., 1991)

FATS.....Familial Atherosclerosis Treatment Study (Brown et al., 1990)

HARP.....Harvard Atherosclerosis Reversibility Project (Sacks et al., 1994)

HATS .....HDL Atherosclerosis Treatment Study (Brown et al., 2000a)

Heidelberg.....Heidelberg (Schuler et al., 1992)

Helsinki .....Helsinki Heart Study (Frick et al., 1987; Huttunen et al., 1991; 1994)

HERS .....Heart and Estrogen/Progestin Replacement Study (Hulley et al., 1998)

HOPE .....Heart Outcomes Prevention Evaluation Study (Heart Outcomes Prevention Evaluation Study Investigators 2000a,b)

INTACT.....International Nifedipine Trial on Antiatherosclerotic Therapy (Lichtlen et al., 1990)

LAARS .....LDL-Apheresis Atherosclerosis Regression Study (Kroon et al., 1996)

LCAS .....Lipoprotein and Coronary Atherosclerosis Study (West et al., 1996)

Lifestyle .....Lifestyle Heart Trial (Ornish et al., 1990)

LIPID .....Long-term Intervention with Pravastatin in Ischaemic Disease (Long-term Intervention with Pravastatin in Ischaemic Disease [LIPID] Study Group 1998)

LOCAT .....Lopid Coronary Angiography Trial (Frick et al., 1997)

LRC-CPPT.....Lipid Research Clinics Coronary Primary Prevention Trial (Glueck et al., 1986)

MAAS .....Multicentre Anti-Atheroma Study (MAAS Investigators 1994)

MARS .....Monitored Atherosclerosis Regression Study (Blankenhorn et al., 1993)

Mayo Asymptomatic Carotid Endarterectomy Study (Mayo Asymptomatic Carotid Endarterectomy Study Group 1992)

MIRACL .....Myocardial Ischemia Reduction with Aggressive Cholesterol Lowering (Schwartz et al., 2001)

Montreal.....Montreal Heart Institute Study (Waters et al., 1990)

MRFIT .....Multiple Risk Factor Intervention Trial (Multiple Risk Factor Intervention Trial Research Group 1982)

NASCET .....North American Symptomatic Carotid Endarterectomy Trial (Ferguson et al., 1999)

NHLBI Type II .....NHLBI Type II Coronary Intervention Study (Brensike et al., 1984)

PDAY.....Pathobiological Determinants of Atherosclerosis in Youth Study (Strong et al., 1997; 1999)

PEPI .....Postmenopausal Estrogen/Progestin Interventions (Cushman et al., 1999)

PLAC I .....Pravastatin Limitation of Atherosclerosis in the Coronary Arteries (Pitt et al., 1995)

POSCH.....Program on the Surgical Control of the Hyperlipidemias (Buchwald et al., 1990)

Post-CABG .....Post Coronary Artery Bypass Graft (Post Coronary Artery Bypass Graft Trial Investigators 1997)

REGRESS .....Regression Growth Evaluation Statin Study (Jukema et al., 1995; Aengevaeren et al., 1997)

SCOR .....San Francisco Arteriosclerosis Specialized Center of Research (Kane et al., 1990)

SCRIP .....Stanford Coronary Risk Intervention Project (Haskell et al., 1994)

SHEP.....Systolic Hypertension in Elderly Program (SHEP Cooperative Research Group 1991)

STARS .....St.Thomas' Atherosclerosis Regression Study (Watts et al., 1992)

UKPDS .....United Kingdom Prospective Diabetes Study (UK Prospective Diabetes Study [UKPDS] Group 1998a,b,c,d)

VAHIT or VA-HIT .....Veterans Affairs HDL Intervention Trial (Rubins et al., 1999)

Veterans Affairs Cooperative Study Group (Hobson et al., 1993)

WHO Clofibrate Study .....World Health Organization Clofibrate Study (Committee of Principal Investigators 1978)

WOSCOPS.....West of Scotland Coronary Prevention Study (Shepherd et al., 1995a)

ATP III References

Aalto-Setala K, Weinstock PH, Bisagaier CL, Wu L, Smith JD, Breslow JL. Further characterization of the metabolic properties of triglyceride-rich lipoproteins from human and mouse apoC-III transgenic mice. *J Lipid Res* 1996;37:1802-11.

Abate N, Vega GL, Grundy SM. Variability in cholesterol content and physical properties of lipoproteins containing apolipoprotein B-100. *Atherosclerosis* 1993;104:159-71.

Abbott RD, Donahue RP, Kannel WB, Wilson PW. The impact of diabetes on survival following myocardial infarction in men vs. women: the Framingham Study. *JAMA* 1988;260:3456-60. [Erratum, *JAMA* 1989;261:1884].

Abbott RD, Sharp DS, Burchfiel CM, Curb JD, Rodriguez BL, Hakim AA, Yano K. Cross-sectional and longitudinal changes in total and high-density-lipoprotein cholesterol levels over a 20-year period in elderly men: the Honolulu Heart Program. *Ann Epidemiol* 1997;7:417-24.

Abbott RD, Wilson PWF, Kannel WB, Castelli WP. High density lipoprotein cholesterol, total cholesterol screening, and myocardial infarction. *Arteriosclerosis* 1988;8:207-211.

Aengevaeren WR, Uijen GJ, Jukema JW, Bruschke AV, and van der Werf T. Functional evaluation of lipid-lowering therapy by pravastatin in the Regression Growth Evaluation Statin Study (REGRESS). *Circulation* 1997;96:429-35.

Ahmad F, Considine RV, Bauer TL, Ohannesian JP, Marco CC, Goldstein BJ. Improved sensitivity to insulin in obese subjects following weight loss is accompanied by reduced protein-tyrosine phosphatases in adipose tissue. *Metabolism* 1997;46:1140-5.

Al Shohaib S. Simvastatin-induced rhabdomyolysis in a patient with chronic renal failure. *Am J Nephrol* 2000;20:212-3.

Alaupovic P, Mack WJ, Knight-Gibson C, Hodis HN. The role of triglyceride-rich lipoprotein families in the progression of atherosclerotic lesions as determined by sequential coronary angiography from a controlled clinical trial. *Arterioscler Thromb Vasc Biol* 1997;17:715-22.

Albert CM, Hennekens CH, O'Donnell CJ, Ajani, UA, Carey VJ, Willett WC, Ruskin JN, Manson JE. Fish consumption and risk of sudden cardiac death. *JAMA* 1998;279:23-8.

Albrink MJ, Krauss RM, Lindgrem FT, von der Groeben J, Pan S, Woo PD. Intercorrelations among plasma high density lipoprotein, obesity and triglycerides in a normal population. *Lipids* 1980;15:668-76.

Alexander JH, Schapel GJ, Edwards KD. Increased incidence of coronary heart disease associated with combined elevation of serum triglyceride and cholesterol concentrations in the nephrotic syndrome in man. *Med J Aust* 1974;2:119-22.

Alfthan G, Pekkanen J, Jauhiainen M, Pitkaniemi J, Karvonen M, Tuomilehto J, Salonen JT, Ehnholm C. Relation of serum homocysteine and lipoprotein(a) concentrations to atherosclerotic disease in a prospective Finnish population-based study. *Atherosclerosis* 1994;106:9-19.

ALLHAT Collaborative Research Group. Major cardiovascular events in hypertensive patients randomized to doxazosin vs chlorthalidone: the antihypertensive and lipid-lowering treatment to prevent heart attack trial (ALLHAT). *JAMA* 2000; 283:1967-75.

Allison DB, Egan SK, Basraj LM, Caughman C, Infante M, Heimbach JT. Estimated intakes of trans-fatty and other fatty acids in the U.S. population. *J Amer Diet Assoc* 1999;99:166-74.

Almendingen K, Jordal O, Kierulf P, Sandstad B, Pedersen JI. Effects of partially hydrogenated fish oil, partially hydrogenated soybean oil, and butter on serum lipoproteins and Lp[a] in men. *J Lipid Res* 1995;36:1370-84.

Alpha-Tocopherol, Beta Carotene Cancer Prevention Study Group. The effect of vitamin E and beta carotene on the incidence of lung cancer and other cancers in male smokers. *N Engl J Med* 1994;330:1029-35.

American College of Physicians. Guidelines for using serum cholesterol, high-density lipoprotein cholesterol, and triglyceride levels as screening tests for preventing coronary heart disease. *Ann Intern Med* 1996;124:515-7.

American Diabetes Association. Clinical practice recommendations 1998: screening for type 2 diabetes. *Diabetes Care* 1998;21(suppl 1):S1-98.

American Diabetes Association. Management of dyslipidemia in adults with diabetes. *Diabetes Care* 2001;24(suppl):S58-S61.

American Diabetes Association. Type 2 diabetes in children and adolescents. *Pediatrics* 2000;105:671-80.

American Heart Association. 1999 heart and stroke statistical update. Dallas, TX: American Heart Association, 1998.

Ames RP. A comparison of the blood lipid and blood pressure responses during the treatment of systematic hypertension with indapamide and with thiazides. *Am J Cardiol* 1996;77:12b-16b.

Ammerman AS, Haines PS, DeVellis RF, Strogatz DS, Keyserling TC, Simpson RJ Jr., Siscovick DS. A brief dietary assessment to guide cholesterol reduction in low-income individuals: Design and validation. *J Am Diet Assoc* 1991;91:1385-90.

Ammerman AS, Haines PS, DeVellis RF, Strogatz DS, Keyserling TC, Simpson RJ Jr., Siscovick DS. A brief dietary assessment to guide cholesterol reduction in low-income individuals: Design and validation. *J Am Diet Assoc* 1991;91:1385-90.

Anand SS, Enas EA, Pogue J, Haffner S, Pearson T, Yusuf S. Elevated lipoprotein(a) levels in South Asians in North America. *Metabolism* 1998;47:182-4.

Anderson JW, Hanna TJ. Impact of nondigestible carbohydrates on serum lipoproteins and risk for cardiovascular disease. *J Nutr* 1999;129:1457S-66S.

Anderson JW. Dietary fibre, complex carbohydrate and coronary artery disease. *Can J Cardiol* 1995;11(suppl G):55G-62G.

Anderson KM, Castelli WP, Levy D. Cholesterol and mortality. 30 years of follow-up from the Framingham Study. *JAMA* 1987;257:2176-80.

Anderson TJ, Meredith IT, Yeung AC, Frei B, Selwyn AP, Ganz P. The effect of cholesterol-lowering and antioxidant therapy on endothelium-dependent coronary vasomotion. *N Engl J Med* 1995;332:488-93.

Angelin B. Therapy for lowering lipoprotein(a) levels. *Curr Opin Lipidol* 1997;8:337-41.

Appel LJ, Moore FJ, Obarzanek E, Vollmer WM, Svetkey LP, Sacks FM, Bray GA, Vogt TM, Cutler JA, Windhauser MM, Lin Pao-Hwa, Karanja N. A clinical trial of the effects of dietary patterns on blood pressure. *N Engl J Med* 1997;336:1117-24.

Arad Y, Ramakrishnan R, Ginsberg HN. Effects of lovastatin therapy on very-low-density lipoprotein triglyceride metabolism in subjects with combined hyperlipidemia: evidence for reduced assembly and secretion of triglyceride-rich lipoproteins. *Metabolism* 1992;41:487-93.

Arad Y, Ramakrishnan R, Ginsberg HN. Lovastatin therapy reduces low-density lipoprotein apoB levels in subjects with combined hyperlipidemia by reducing the production of apoB-containing lipoproteins: implications for the pathophysiology of apoB production. *J Lipid Res* 1990;31:567-82.

Arad Y, Spadaro LA, Goodman K, Newstein D, Guerci AD. Prediction of coronary events with electron beam computed tomography. *J Am Coll Cardiol* 2000;36:1253-60.

Arnesen E, Refsum H, Bonaa KH, Ueland PM, Forde OH, Nordrehaug JE. Serum total homocysteine and coronary heart disease. *Int J Epidemiol* 1995;24:704-9.

Arntz H, Agrawal R, Wunderlich W, Schnitzer L, Stern R, Fischer F, Schultheiss H. Beneficial effects of pravastatin (±colestyramine/niacin) initiated immediately after a coronary event (The randomized Lipid-Coronary Artery Disease [L-CAD] study). *Am J Cardiol* 2000;86:1293-8.

Aro A, Jauhiainen M, Partanen R, Salminen I, Mutanen M. Stearic acid, trans-fatty acids, and dairy fat: effects on serum and lipoprotein lipids, apolipoproteins, lipoprotein(a), and lipid transfer proteins in healthy subjects. *Am J Clin Nutr* 1997;65:1419-26.

Aro A, Kardinaal AFM, Kark JD, Riemersma RA, Delgado-Rodriguez M, Gomez-Aracena J, Hutturen JK, Kohlmeier L, Martin BC, Martin-Moreno JM, Mazaev VP, Ringstad J, Thamm M, vant Veer P, Kok, FJ. Adipose tissue isomeric trans fatty-acids and risk of myocardial infarction in nine countries: the EURAMIC study. *Lancet* 1995;345:273-8.

Ascherio A, Katan MB, Zock PL, Stampfer MJ, Willett WC. Trans-fatty acids and coronary heart disease. *N Engl J Med* 1999;340:1994-8.

Ascherio A, Rimm EB, Stampfer MJ, Giovanucci EL, Willett WC. Dietary intake of marine n-3 fatty acids, fish intake, and risk of coronary disease among men. *N Eng J Med* 1995;332:977-82.

Ashraf T, Hay JW, Pitt B, Wittels E, Crouse J, Davidson M, Furberg CD, Radican L. Cost-effectiveness of pravastatin in secondary prevention of coronary artery disease. *Am J Cardiol* 1996;78(4):409-14.

Assmann G, Brewer HB Jr. Genetic (primary) forms of hypertriglyceridemia. *Am J Cardiol* 1991;68(3):13A-16A.

Assmann G, Carmena R, Cullen P, Fruchart JC, Jossa F, Lewis B, Mancini M, Paoletti R. Coronary heart disease: reducing the risk: a worldwide view. International Task Force for the Prevention of Coronary Heart Disease. *Circulation* 1999a;100:1930-8.

Assmann G, Cullen P, Jossa F, Lewis B, Mancini M. Coronary heart disease: reducing the risk: the scientific background to primary and secondary prevention of coronary heart disease. A worldwide view. International Task force for the Prevention of Coronary Heart disease. *Arterioscler Thromb Vasc Biol* 1999b;19:1819-24.

Assmann G, Cullen P, Schulte H. The Munster Heart Study (PROCAM). Results of follow-up at 8 years. *Eur Heart J* 1998b;19(suppl A):A2-A11.

Assmann G, Schulte H, Funke H, von Eckardstein A. The emergence of triglycerides as a significant independent risk factor in coronary artery disease. *Eur Heart J* 1998a;19(suppl M):M8-M14.

Assmann G, Schulte H, von Eckardstein A, Huang Y. High-density lipoprotein cholesterol as a predictor of coronary heart disease risk. The PROCAM experience and pathophysiological implications for reverse cholesterol transport. *Atherosclerosis* 1996;124(suppl 6):S11-S20.

Assmann G, Schulte H. Relation of high-density lipoprotein cholesterol and triglycerides to incidence of atherosclerotic coronary artery disease (the PROCAM experience). Prospective Cardiovascular Munster Study. *Am J Cardiol* 1992;70:733-7.

Astrup A, Toubro S, Raben A, Skov AR. The role of low-fat diets and fat substitutes in body weight management: what have we learned from clinical studies? *J Am Diet Assoc* 1997;97(suppl 7):S82-S87.

Astrup A. Obesity and metabolic efficiency. *CIBA Found Symp* 1996;201:159-68.

Athyros VG, Papageorgiou AA, Hatzikonstandinou HA, Didangelos TP, Carina MV, Kranitsas DF, Kontopoulos AG. Safety and efficacy of long-term statin-fibrate combinations in patients with refractory familial combined hyperlipidemia. *Am J Cardiol* 1997;80:608-13.

Attman PO, Alaupovic P, Gustafson A. Serum apolipoprotein profile of patients with chronic renal failure. *Kidney Int* 1987;32:368-75.

Austin MA, Breslow JL, Hennekens CH, Buring JE, Willett WC, Krauss RM. Low-density lipoprotein subclass patterns and risk of myocardial infarction. *JAMA* 1988;260:1917-21.

Austin MA, Hokanson JE, Edwards KL. Hypertriglyceridemia as a cardiovascular risk factor. *Am J Cardiol* 1998;81:7B-12B.

Austin MA, Horowitz H, Wijsman E, Krauss RM, Brunzell J. Bimodality of plasma apolipoprotein B levels in a familial combined hyperlipidemia. *Atherosclerosis* 1992;92:67-77.

Austin MA, King MC, Vranizan KM, Krauss RM. Atherogenic lipoprotein phenotype. A proposed genetic marker for coronary heart disease risk. *Circulation* 1990;82:495-506.

Austin MA, McKnight B, Edwards KL, Bradley CM, McNeely MJ, Psaty BM, Brunzell JD, Motulsky AG. Cardiovascular disease mortality in familial forms of hypertriglyceridemia: A 20-year prospective study. *Circulation* 2000a;101:2777-82.

Austin MA, Rodriguez BL, McKnight B, McNeely MJ, Edwards KL, Curb JD, Sharp DS. Low-density lipoprotein particle size, triglycerides, and high-density lipoprotein cholesterol as risk factors for coronary heart disease in older Japanese-American men. *Am J Cardiol* 2000b;86:412-16.

Austin MA. Plasma triglyceride as a risk factor for cardiovascular disease. *Can J Cardiol* 1998;14(suppl B):14B-17B.

Azen SP, Mack WJ, Cashin-Hemphill L, LaBree L, Shircore AM, Selzer RH, Blankenhorn DH, Hodis HN. Progression of coronary artery disease predicts clinical coronary events. Long-term follow-up from the Cholesterol Lowering Atherosclerosis Study. *Circulation* 1996;93:34-41.

Bagdade JD, Porte D, Bierman EL. Hypertriglyceridemia. A metabolic consequence of chronic renal failure. *N Engl J Med* 1968;279:181-5.

Baird MG, Bentley-Taylor MM, Carruthers SG, Dawson KG, Laplante LE, Larochelle P, MacCannell KL, Marquez-Julio A, Silverberg LR, Talbot P. A study of efficacy, tolerance and compliance of once-daily versus twice-daily metoprolol (Betaloc) in hypertension. Betaloc Compliance Canadian Cooperative Study Group. *Clin Invest Med* 1984;7:95-102.

Baker RC, Kirschenbaum DS. Self-monitoring may be necessary for successful weight control. *Behavior Therapy* 1993;24:377-94.

Bakker-Arkema RG, Davidson MH, Goldstein RJ, Davignon J, Isaacsoh JL Weiss SR, Keilson LM, Brown WV, Miller VT, Shurzinske LJ, Blacl DM. Efficacy and safety of new HMG-CoA reductase inhibitor, atorvastatin, in patients with hypertriglyceridemia. *JAMA* 1995;275:128-33.

Ball KP, Hanington E, McAllen PM. Low-fat diet in myocardial infarction. A controlled trial. *Lancet* 1965;2:501-4.

Ballantyne CM. Clinical trial endpoints: angiograms, events, and plaque instability. A*m J Cardiol* 1998;82:5M-11M.

Bandura A. Self-efficacy. The exercise of control. New York: W.H. Freeman and Company, 1997;500 pages.

Baranowski T, Smith M, Baranowski J, Wang DT, Doyle C, Lin LS, Hearn MD, Resnicow K. Low validity of a seven-item fruit and vegetable food frequency questionnaire among third-grade students. *J Am Diet Assoc* 1997;97:66-8.

Bargardi AM, Starling MR. Impact of nurse practitioner-implemented evidence-based clinical pathways on "best practice" in an interventional cardiology program. *Circulation* 1999;100:I-99[Abstract 510].

Barnett HJ, Taylor DW, Eliasziw M, Fox AJ, Ferguson GG, Haynes RB, Rankin RN, Clagett GP, Hachinski VC, Sackett DL, Thorpe KE, Meldrum HE. Benefit of carotid endarterectomy in patients with symptomatic moderate or severe stenosis. North American Symptomatic Carotid Endarterectomy Trial Collaborators. *N Engl J Med* 1998;339:1415-25.

Barosi G, Marchetti M, Dazzi L, Quaglini S. Testing for occult cancer in patients with idiopathic deep vein thrombosis–a decision analysis. *Thromb and Haemost* 1997;78:1319-26.

Barrett-Connor E, Grady D. Hormone replacement therapy, heart disease, and other considerations. *Annu Rev Public Health* 1998;19:55-72.

Barrett-Connor E, Khaw K. Family history of heart attack as an independent predictor of death due to cardiovascular disease. *Circulation* 1984;69:1065-9.

Barrett-Connor E, Philippi T, Khaw KT. Lipoproteins as predictors of ischemic heart disease in non-insulin-dependent diabetic men. *Am J Prev Med* 1987;3:206-10.

Barrett-Connor E. Hormone replacement therapy. *BMJ* 1998;317:457-61.

Batal R, Tremblay M, Barrett PH, Jacques H, Fredenrich A, Mamer O, Davignon J, Cohn JS. Plasma kinetics of apoC-III and apoE in normolipidemic and hypertriglyceridemic subjects. *J Lipid Res* 2000;41:706-18.

Baxter JH. Hyperlipoproteinemia in nephrosis. *Arch Intern Med* 1962;109:742-57.

Becker DM, Becker LC, Pearson TA, Fintel DJ, Levine DM, Kwiterovich PO. Risk factors in siblings of people with premature coronary heart disease. *J Am Coll Cardiol* 1988;12:1273-80.

Becker DM, Raqueno JV, Yook RM, Kral BG, Blumenthal RS, Moy TF, Bezirdjian PJ, Becker LC. Nurse-mediated cholesterol management compared with enhanced primary care in siblings of individuals with premature coronary disease. *Arch Intern Med* 1998;158:1533-9.

Becker LA, Glanz K, Sobel E, Mossey J, Zinn SL, Knott KA. A randomized trial of special packaging of antihypertensive medications. *J Fam Pract* 1986;22:357-61.

Behar S, Boyko V, Reicher-Reiss H, Goldbourt U. Ten-year survival after acute myocardial infarction: comparison of patients with and without diabetes. SPRINT Study Group. Secondary Prevention Reinfarction Israeli Nifedipine Trial. *Am Heart J* 1997;133:290-6.

Beil U, Crouse JR, Einarsson K, Grundy SM. Effects of interruption of the enterohepatic circulatin of bile acids on the transport of very low-density-lipoprotein triglycerides. *Metabolism* 1982a;31:438-44.

Beil U, Grundy SM, Crouse JR, Zech. Triglyceride and cholesterol metabolism in primary hypertriglyceridemia. *Arteriosclerosis* 1982b;2:44-57.

Belcher DW. Implementing preventive services. Success and failure in an outpatient trial. *Arch Intern Med* 1990;150:2533-41.

Bell LP, Hectorne K, Reynolds H, Balm TK, Hunninghake DB. Cholesterol-lowering effects of psyllium hydrophilic mucilloid-adjunct therapy to a prudent diet for patients with mild to moderate hypercholesterolemia. *JAMA* 1989;261:3419-23.

Benderly M, Behar S, Reicher-Reiss H, Boyko V, Goldbourt U. Long-term prognosis of women after myocardial infarction. SPRINT Study Group. Secondary Prevention Reinfarction Israeli Nifedipine Trial. *Am J Epidemiol* 1997;146:153-60.

Bensen JT, Li R, Hutchinson RG, Province MA, Tyroler HA. Family history of coronary heart disease and pre-clinical carotid artery atherosclerosis in African-Americans and whites: the ARIC study: Atherosclerosis Risk in Communities. *Genet Epidemiol* 1999;16:165-78.

Berchtold P, Berger M, Jorgens V, Daweke C, Chantelau E, Gries FA, Zimmermann H. Cardiovascular risk factors and HDL-cholesterol levels in obesity. *Int J Obes* 1981a;5:1-10.

Berchtold P, Jorgens V, Finke C, Berger M. Epidemiology of obesity and hypertension. *Int J Obesity* 1981b;5(suppl 1):1-7.

Berenson GS, Srinivasan SR, Bao W, Newman WP III, Tracy RE, Wattigney WA. Association between multiple cardiovascular risk factors and atherosclerosis in children and young adults. *N Engl J Med* 1998;338:1650-6.

Berenson GS, Wattigney WA, Tracy RE, Newman WP III, Srinivasan SR, Webber LS, Dalferes ER Jr., Strong JP. Atherosclerosis of the aorta and coronary arteries and cardiovascular risk factors in patients aged 6 to 30 years and studies at necropsy (The Bogalusa Heart Study). *Am J Cardiol* 1992;70:851-8.

Berg A, Halle M, Franz I, Keul J. Physical activity and lipoprotein metabolism: epidemiological evidence and clinical trials. *Eur J Med Res* 1997;2:259-64.

Berg-Smith SM, Stevens VJ, Brown KM, Van Horn L, Gernhofer N, Peters E, Greenberg R, Snetselaar L, Ahrens L, Smith K. A brief motivational intervention to improve dietary adherence in adolescents. *Health Educ Res* 1999;14:399-410.

Berlowitz DR, Ash AS, Hickey EC, Friedman RH, Glickman M, Kader B, Moskowitz MA. Inadequate management of blood pressure in a hypertensive population. *N Engl J Med* 1998;339:1957-63.

Berlyne GM, Mallick, NP. Ischaemic heart-disease as a complication of nephrotic syndrome. *Lancet* 1969;2:399-400.

Bestehorn HP, Rensing UF, Roskamm H, Betz P, Benesch L, Schemeitat K, Blumchen G, Claus J, Mathes P, Kappenberger L, Wieland H, Neiss A. The effect of simvastatin on progression of coronary artery disease: the Multicenter Coronary Intervention Study (CIS). *Eur Heart J* 1997;18:226-34.

Bezafibrate Infarction Prevention (BIP) Study. Secondary prevention by raising HDL cholesterol and reducing triglycerides in patients with coronary artery disease. *Circulation* 2000;102:21-7.

Bierman EL. George Lyman Duff Memorial Lecture. Atherogenesis in diabetes. *Arterioscler Thromb* 1992;12:647-56.

Bilheimer DW, Goldstein JL, Grundy SM, Brown MS. Reduction in cholesterol and low density lipoprotein synthesis after portacaval shunt surgery in a patient with homozygous familial hypercholesterolemia. *J Clin Invest* 1975;56:1420-30.

Bilheimer DW, Grundy SM, Brown MS, Goldstein JL. Mevinolin and colestipol stimulate receptor-mediated clearance of low density lipoprotein from plasma in familial hypercholesterolemia heterozygotes. *Proc Natl Acad Sci U S A* 1983;80:4124-8.

Bilheimer DW. Portacaval shunt and liver transplantation in treatment of familial hypercholesterolemia. *Arteriosclerosis* 1989;9(suppl 1):I158-63.

Bjorkegren J, Boquist S, Samnegard A, Lundman P, Tornvall P, Ericsson CG, Hamsten A. Accumulation of apolipoprotein C-I-rich and cholesterol-rich VLDL remnants during exaggerated postprandial triglyceridemia in normolipidemic patients with coronary artery disease. *Circulation* 2000;101:227-30.

Bjorntorp P. Abdominal obesity and the metabolic syndrome. *Ann Med* 1992;24:465-8.

Bjorntorp P. Body fat distribution, insulin resistance, and metabolic diseases. *Nutrition* 1997;13:795-803.

Blackburn H. The public health view of the diet and mass hyperlipidemia. *Cardiovas Rev Rep* 1990;11:25-33.

Blair D, Habicht JP, Sims EA, Sylwester D, Abraham S. Evidence for an increased risk for hypertension with centrally located body fat and the effect of race and sex on this risk. *Am J Epidemiol* 1984;119:526-40.

Blair SN, Capuzzi DM, Gottlieb SO, Nguyen T, Morgan JM, Cater NB. Incremental reduction of serum total cholesterol and low-density lipoprotein cholesterol with the addition of plant stanol ester-containing spread to statin therapy. *Am J Cardiol* 2000;86:46-52.

Blair SN, Cooper KH, Gibbons LW, Gettman LR, Lewis S, Goodyear N. Changes in coronary heart disease risk factors associated with increased treadmill time in 753 men. *Am J Epidemiol* 1983;118:352-9.

Blair SN, Kohl HW III, Paffenbarger RS Jr., Clark DG, Cooper KH, Gibbons, LW. Physical fitness and all-cause mortality. A prospective study of healthy men and women. *JAMA* 1989;262:2395-401.

Blair TP, Bryant J, Bocuzzi S. Treatment of hypercholesterolemia by a clinical nurse using a stepped-care protocol in a nonvolunteer population. *Arch Intern Med* 1988;48:1046-8.

Blankenhorn DH, Azen SP, Kramsch DM, Mack WJ, Cashin-Hemphill L, Hodis HN, DeBoer LW, Mahrer PR, Masteller MJ, Vailas LI. Coronary angiographic changes with lovastatin therapy. The Monitored Atherosclerosis Regression Study (MARS). The MARS Research Group. *Ann Intern Med* 1993;119:969-76.

Blankenhorn DH, Nessim SA, Johnson RL, Sanmarco ME, Azen SP, Cashin-Hemphill L. Beneficial effects of combined colestipol-niacin therapy on coronary atherosclerosis and coronary venous bypass grafts. *JAMA* 1987;257:3233-40.

Blauw GJ, Lagaay AM, Smelt AH, Westendorp RG. Stroke, statins, and cholesterol. A meta-analysis of randomized, placebo-controlled, double-blind trials with HMG-CoA reductase inhibitors. *Stroke* 1997;28:946-50.

Bloch S, Couderc R. Apolipoprotein B and LDL cholesterol: which parameter(s) should be included in the assessment of cardiovascular risk? *Ann Biol Clin* 1998;56:539-44.

Blot WJ, Li JY, Taylor PR, Guo W, Dawsey S, Wang GQ,Yang CS, Zheng SF, Gail M, Li GY, Yu Y, Liu B, Tangrea J, Sun Y, Liu F, Fraumeni JF Jr., Zhang YH, Li B. Nutrition intervention trials in Linxian, China: supplementation with specific vitamin/mineral combinations, cancer incidence, and disease-specific mortality in the general population. *J Nat'l Cancer Inst* 1993;85:1483-92.

Bluml BM, McKenney JM, Cziraky MJ. Pharmaceutical care services and results in Project ImPACT: hyperlipidemia. *J Am Pharm Assoc* 2000;40:157-65.

Boccuzzi SJ, Bocanegra TS, Walker JF, Shapiro DR, Keegan ME. Long-term safety and efficacy profile of simvastatin. *Am J Cardiol* 1991;68:1127-31.

Bodkin NL, Hannah JS, Ortmeyer HK, Hansen BC. Central obesity in rhesus monkeys: association with hyperinsulinemia, insulin resistance and hypertriglyceridemia? *Int J Obes Relat Metab Disord* 1993;17:53-61.

Boer R, de Koning HJ, van der Maas PJ. A longer breast carcinoma screening interval for women age older than 65 years? *Cancer* 1999;86:1506-10.

Boomsma DI, Kempen HJ, Gevers Leuven JA, Havekes L, de Knijff P, Frants RR. Genetic analysis of sex and generation differences in plasma lipid, lipoprotein, and apolipoprotein levels in adolescent twins and their parents. *Genet Epidemiol* 1996;13:49-60.

Borchers AT, Keen CL, Stern JS, Gershwin ME. Inflammation and Native American medicine: the role of botanicals. *Am J Clin Nutr* 2000;72:339-47.

Bostom AG, Rosenberg IH, Silbershatz H, Jacques PF, Selhub J, D'Agostino RB, Wilson PW, Wolf PA. Nonfasting plasma total homocysteine levels and stroke incidence in older patients: The Framingham Study. *Ann Intern Med* 1999;131:352-5.

Boushey CJ, Beresford SA, Omenn GS, Motulsky AG. A quantitative assessment of plasma homocysteine as a risk factor for vascular disease. Probable benefits of increasing folic acid intakes. *JAMA* 1995;274:1049-57.

Bovbjerg VE, McCann BS, Brief DJ, Follette WC, Retzlaff BM, Dowdy AA, Walden CE, Knopp RH. Spouse support and long-term adherence to lipid-lowering diets. *Am J Epidemiol* 1995;141:451-60.

Bowker TJ, Clayton TC, Ingham J, McLennan NR, Hobson HL, Pyke SD, Schofield B, Wood DA. A British Cardiac Society survey of the potential for the secondary prevention of coronary disease: ASPIRE (Action on Secondary Prevention through Intervention to Reduce Events). Heart 1996;75:334-42.

Bradford RH, Shear CL, Chremos AN, Dujovne C, Downton M, Franklin FA, Gould AL, Hesney M, Higgins J, Hurley DP. Expanded Clinical Evaluation of Lovastatin (EXCEL) study results. I. Efficacy in modifying plasma lipoproteins and adverse event profile in 8245 patients with moderate hypercholesterolemia. *Arch Intern Med* 1991;151:43-9.

Bradford RH, Shear CL, Chremos AN, Dujovne CA, Franklin FA, Grillo RB, Higgins J, Langendorfer A, Nash DT, Pool JL, Schnaper H. Expanded Clinical Evaluation of Lovastatin (EXCEL) study results: two-year efficacy and safety follow-up. *Am J Cardiol* 1994;74:667-73.

Brensike JF, Levy RI, Kelsey SF, Passamani ER, Richardson JM, Loh IK, Stone NJ, Aldrich RF, Battaglini JW, Moriarty DJ, Fisher MR, Friedman L, Friedewald W, Detre KM, Epstein SE. Effects of therapy with cholestyramine on progression of coronary arteriosclerosis: results of the NHLBI Type II Coronary Intervention Study. *Circulation* 1984;69:313-24.

Breslow JL. Mouse models of atherosclerosis. *Science* 1996;272:685-8.

Briefel RR, Sempos CT, McDowell MA, Chien S, Alaimo K. Dietary methods research in the third National Health and Nutrition Examination Survey: underreporting of energy intake. *Am J Clin Nutr* 1997;65:1203S-9S.

Brinberg D, Axelson ML, Price S. Changing food knowledge, food choice, and dietary fiber consumption by using tailored messages. *Appetite* 2000;35:35-43.

Brousseau ME, Schaefer EJ. Diet and coronary heart disease: clinical trials. *Curr Atheroscler Rep* 2000;2:487-93.

Brown AS, Cofer LA. Lipid management in a private cardiology practice (the Midwest Heart experience). *Am J Cardiol* 2000;85:18A-22A.

Brown B, Albers JJ, Fisher LD, Schaffer SM, Lin J-T, Kaplan C, Zhao XQ, Bisson BD, Fitzpatrick VF, Dodge HT. Regression of coronary artery disease as a result of intensive lipid-lowering therapy in men with high levels of apolipoprotein B. *N Engl J Med* 1990;323:1289-98.

Brown BG, Bardsley J, Poulin D, Hillger LA, Dowdy A, Maher VM, Zhao XQ, Albers JJ, Knopp RH. Moderate dose, three-drug therapy with niacin, lovastatin, and colestipol to reduce low-density lipoprotein cholesterol <100 mg/dL in patients with hyperlipidemia and coronary artery disease. *Am J Cardiol* 1997;80:111-15.

Brown BG, Zhao XQ, Chait A, Fisher LD, Dowdy A, Cheung M, Morse JJ, Serafini L, Huss-Frechette E, Deangelis D, Frohlich JJ, Albers JJ. Niacin plus simvastatin, but not antioxidant vitamins, protect against atherosclerosis and clinical events in CAD patients with low HDL cholesterol. *Circulation* 2000;102:II-506.

Brown BG, Zhao XQ, Sacco DE, Albers JJ. Lipid lowering and plaque regression. New insights into prevention of plaque disruption and clinical events in coronary disease. *Circulation* 1993;87:1781-91.

Brown BG, Zhao XQ. Lipid therapy to stabilize the vulnerable atherosclerotic plaque: new insights into the prevention of cardiovascular events. In: Grundy SM, ed. Cholesterol-lowering therapy: evaluation of clinical trial evidence. New York: Marcel Dekker, Inc., 2000;249-72.

Brown CD, Higgins M, Donato KA, Rohde FC, Garrison R, Obarzanek E, Ernst ND, Horan M. Body mass index and the prevalence of hypertension and dyslipidemia. *Obes Res* 2000;8:605-19.

Brown G, Stewart BF, Zhao XQ, Hillger LA, Poulin D, Albers JJ. What benefit can be derived from treating normocholesterolemic patients with coronary artery disease? *Am J Cardiol* 1995;76:93C-97C.

Brown L, Rosner B, Willett WW, Sacks FM. Cholesterol-lowering effects of dietary fiber: a meta-analysis. *Am J Clin Nutr* 1999;69:30-42.

Brown MS, Goldstein JL. A receptor-mediated pathway for cholesterol homeostasis. *Science* 1986;232:34-47.

Broyles FE, Walden CE, Hunninghake DB, Hill-Williams D, Knopp RH. Effect of fluvastatin on intermediate density lipoprotein (remnants) and other lipoprotein levels in hypercholesterolemia. *Am J Cardiol* 1995;76:129A-135A.

Brunzell JD, Schrott HG, Motulsky AG, Bierman EL. Myocardial infarction in the familial forms of hypertriglyceridemia. *Metabolism* 1976;25:313-20.

Buchwald H, Varco RL, Matts JP, Long JM, Fitch LL, Campbell GS, Pearce MB, Yellin AE, Edmiston WA, Smink RD Jr. Effect of partial ileal bypass surgery on mortality and morbidity from coronary heart disease in patients with hypercholesteroalmia. Report of the Program on the Surgical Control of the Hyperlipidemias (POSCH). *N Engl J Med* 1990;323:946-55.

Buchwald H. Program on the Surgical Control of the Hyperlipidemias (POSCH) trial: A pivotal 25-year study. In: Grundy SM, ed. Cholesterol-lowering therapy: evaluation of clinical trial evidence. New York: Marcel Dekker, Inc., 2000;117-49.

Budde T, Fechtrup C, Bosenberg E, Vielhauer C, Enbergs A, Schulte H, Assmann G, Breithardt G. Plasma Lp(a) levels correlate with number, severity, and length-extension of coronary lesions in male patients undergoing coronary arteriography for clinically suspected coronary atherosclerosis. *Arterioscler Thromb* 1994;14:1730-6.

Bulgin RH. Comparative costs of various dialysis treatments. *Peritoneal Dialysis Bulletin* 1981;1:88-91.

Burr ML, Fehily AM, Gilbert JF, Rogers S, Holliday RM, Sweetnam PM, Elwood PC, Deadman NM. Effects of changes in fat, fish and fibre intakes on death and myocardial reinfarction: Diet and Reinfarction Trial (DART). *Lancet* 1989;2:757-61.

Buxton MJ, West RR. Cost-benefit of long-term haemodialysis for chronic renal failure. *BMJ* 1975;2;376-9.

Byington RP, Davis BR, Plehn JF, White HD, Baker J, Cobbe SM, Shepherd J. Reduction of stroke events with pravastatin: the Prospective Pravastatin Pooling (PPP) Project. *Circulation* 2001;103:387-92.

Byington RP, Jukema JW, Salonen JT, Pitt B, Bruschke AV, Hoen H, Furberg CD, Mancini GB. Reduction in cardiovascular events during pravastatin therapy. Pooled analysis of clinical events of the Pravastatin Atherosclerosis Intervention Program. *Circulation* 1995;92:2419-25.

Cabana MD, Rand CS, Powe NR, Wu AW, Wilson MH, Abboud PA, Rubin HR. Why don't physicians follow clinical practice guidelines? A framework for improvement. *JAMA* 1999;282:1458-65.

Caggiula AW, Christakis G, Farrand M, Hulley SB, Johnson R, Lasser NL, Stamler J, Widdowson G. The Multiple Risk Intervention Trial (MRFIT). IV.Intervention on blood lipids. *Prev Med* 1981;10:443-75.

Caggiula AW, Watson JE, Kuller LH, Olson MB, Milas NC, Berry M, Germanowski J. Cholesterol-lowering intervention program. Effect of the step I diet in community office practices. *Arch Intern Med* 1996;156:1205-13.

Caggiula AW, Watson JE, Milas NC, Olson MB, Kuller LH, Orchard TJ. Evaluating the efficacy of the National Cholesterol Education Program adult treatment guidelines: cholesterol lowering intervention program. *Prev Med* 1995;24:485-91.

Calle EE, Thun MJ, Petrelli JM, Rodriguez C, Heath CW. Body-mass index and mortality in a prospective cohort of U.S. Adults. *N Engl J Med* 1999;341:1097-105.

Campbell MK, DeVellis BM, Strecher VJ, Ammerman AS, DeVellis RF, Sandler RS. Improving dietary behavior: the effectiveness of tailored messages in primary care settings. *Am J Public Health* 1994;84:783-7.

Canner PL, Berge KG, Wenger NK, Stamler J, Friedman L, Prineas RJ, Friedewald W. Fifteen year mortality in Coronary Drug Project patients: long-term benefit with niacin. *J Am Coll Cardiol* 1986;8:1245-55.

Capuzzi DM, Guyton JR, Morgan JM, Goldberg AC, Kreisberg RA, Brusco OA, Brody J. Efficacy and safety of an extended-release niacin (Niaspan): a long-term study. *Am J Cardiol* 1998,82:74U-81U; discussion 85U-86U.

Carleton RA, Dwyer J, Finberg L, Flora J, Goodman DS, Grundy SM, Havas S, Hunter GT, Kritchevsky D, Lauer RM, Luepker RV, Ramirez AG, Van Horn L, Statson WB, Cleeman JI, Ernst N, Friedewald W, Rifkind B. Report of the Expert Panel on Population Strategies for Blood Cholesterol Reduction. A statement from the National Cholesterol Education Program, National Heart, Lung, and Blood Institute. *Circulation* 1991;83:2154-232.

Carlson LA, Hamsten A, Asplund A. Pronounced lowering of serum levels of lipoprotein Lp(a) in hyperlipidemic subjects treated with nicotinic acid. *J Intern Med* 1989;226:271-6.

Carlson LA, Rosenhamer G. Reduction of mortality in the Stockholm Ischaemic Heart Disease Secondary Prevention Study by combined treatment with clofibrate and nicotinic acid. *Acta Med Scand* 1988;223:405-18.

Caro J, Klittich W, McGuire A, Ford I, Norrie J, Pettitt D, McMurray J, Shepherd J. The West of Scotland Coronary Prevention Study: economic benefit analysis of primary prevention with pravastatin. *BMJ* 1997;315:1577-82.

Carr MC, Hokanson JE, Deeb SS, Purnell JQ, Mitchell ES, Brunzell JD. A hepatic lipase gene promoter polymorphism attenuates the increase in hepatic lipase activity with increasing intra-abdominal fat in women. *Arterioscler Thromb Vasc Biol* 1999;19:2701-7.

Carter BL, Barnette DJ, Chrischilles E, Mazzotti GJ, Asali ZJ. Evaluation of hypertensive patients after care provided by community pharmacists in a rural setting. *Pharmacotherapy* 1997;17:1274-85.

CASANOVA Study Group. Carotid surgery versus medical therapy in asymptomatic carotid stenosis. *Stroke* 1991;22:1229-35.

Casaretto A, Marchioro TL, Goldsmith R, Bagdade D. Hyperlipidaemia after successful renal transplantation. *Lancet* 1974;1:481-4.

Castelli WP, Anderson K, Wilson PW, Levy D. Lipids and risk of coronary heart disease. The Framingham Study. *Ann Epidemiol* 1992;2:23-8.

Cauley JA, LaPorte RE, Kuller LH, Bates M, Sandler RB. Menopausal estrogen use, high density lipoprotein cholesterol subfractions and liver function. *Atherosclerosis* 1983;49:31-9.

Cavaghan MK, Ehrmann DA, Polonsky KS. Interactions between insulin resistance and insulin secretion in the development of glucose intolerance. *J Clin Invest* 2000;106:329-33.

Centers for Disease Control and Prevention. Folate status in women of childbearing age—United States, 1999. *MMWR* 2000;49:962-5.

Chait A, Albers JJ, Brunzell JD. Very low density lipoprotein overproduction in genetic forms of hypertriglyceridaemia. *Eur J Clin Invest* 1980;10:17-22.

Chait A, Brunzell JD. Acquired hyperlipidemia (secondary dyslipoproteinemias). *Endocrinol Metab Clin North Am* 1990;19:259-78.

Chait A, Brunzell JD. Chylomicronemia syndrome. *Adv Intern Med* 1992;37:249-73.

Chambless LE, Heiss G, Folsom AR, Rosamond W, Szklo M, Sharrett AR, Clegg LX. Association of coronary heart disease incidence with carotid arterial wall thickness and major risk factors: the Atherosclerosis Risk in Communities (ARIC) Study. *Am J Epidemiol* 1997;146:483-94.

Chen YD, Coulston AM, Zhou MY, Hollenbeck CB, Reaven GM. Why do low-fat high-carbohydrate diets accentuate postprandial lipemia in patients with NIDDM? *Diabetes Care* 1995;18:10-16.

Chen Z, Peto R, Collins R, MacMahon S, Lu J, Li W. Serum cholesterol concentration and coronary heart disease in populations with low cholesterol concentrations. *BMJ* 1991;303:276-82.

Chimowitz MI, Weiss DG, Cohen SL, Starling MR, Hobson RW. Cardiac prognosis of patients with carotid stenosis and no history of coronary artery disease. Veterans Affairs Cooperative Study Group 167. *Stroke* 1994;25:759-65.

Chobanian AV, Hill M. National Heart, Lung, and Blood Institute Workshop on Sodium and Blood Pressure. A critical review of current scientific evidence. *Hypertension* 2000;35:858-63.

Christie D. Screening for breast cancer: Cost-benefit analysis. *Mayo Clinic Proc* 1977;47:550-5.

Churchill DN, Lemon BC, Torrance GW. A cost-effectiveness analysis of continuous ambulatory peritoneal dialysis and hospital dialysis. *Medical Decision Making* 1984;4:489-500.

Clark LT, Ferdinand KC, Flack JM, Gavin JR III, Hall WD, Kumanyika SK, Reed JW, Saunders E, Valantine HA, Watson K, Wenger NK, Wright JT. Coronary heart disease in African Americans. *Heart Disease* 2001;3:97-108.

Clark LT. Anatomic substrate differences between African American and white victims of sudden cardiac death: hypertension, coronary artery disease, or both? *Clin Cardiol* 1989;12:IV:13-17.

Clark LT. Primary prevention of cardiovascular disease in high-risk patients: physiologic and demographic risk factor differences between African American and white American populations. *Am J Med* 1999;107(2A):22S-24S.

Clark R, Collins R. Can dietary supplements with folic acid or vitamin B_6 reduce cardiovascular risk? Design of clinical trials to test the homocysteine hypothesis of vascular disease. *J Cardiovasc Risk* 1998;5:249-55.

Clarke R, Frost C, Collins R, Appleby P, Peto R. Dietary lipids and blood cholesterol: quantitative meta-analysis of metabolic ward studies. *BMJ* 1997;314:112-17 .

Cleeman JI, Grundy SM. National Cholesterol Education Program recommendations for cholesterol testing in young adults. A science-based approach. *Circulation* 1997;95:1646-50.

Cleeman JI, Lenfant C. The National Cholesterol Education Program: progress and prospects. *JAMA* 1998;280:2099-104.

Cohen JC, Wang Z, Grundy SM, Stoesz MR, Guerra R. Variation at the hepatic lipase and apolipoprotein AI/CIII/AIV loci is a major cause of genetically determined variation in plasma HDL cholesterol levels. *J Clin Invest* 1994;94:2377-84.

Colcher IS, Bass JW. Penicillin treatment of streptococcal pharyngitis. A comparison of schedules and the role of specific counseling. *JAMA* 1972;222:657-9.

Colditz GA, Bonita R, Stampfer MJ, Willett WC, Rosner B, Speizer FE, Hennekens CH. Cigarette smoking and risk of stroke in middle-aged women. *N Engl J Med* 1988;318:937-41.

Colditz GA, Egan KM, Stampfer MJ. Hormone replacement therapy and risk of breast cancer: results from epidemiologic studies. *Am J Obstet Gynecol* 1993;168:1473-80.

Colditz GA, Rimm EB, Giovannucci E, Stampfer MJ, Rosner B, Willett WC. A prospective study of parental history of myocardial infarction and coronary artery disease in men. *Am J Cardiol* 1991;67:933-8.

Colditz GA, Willett WC, Stampfer MJ, Rosner B, Speizer FE, Hennekens CH. Menopause and the risk of coronary heart disease in women. *N Engl J Med* 1987;316:1105-10.

Collaborative Group on Hormonal Factors in Breast Cancer. Breast cancer and hormone replacement therapy: collaborative reanalysis of data from 51 epidemiological studies of 52,705 women with breast cancer and 108,411 women without breast cancer. *Lancet* 1997;350:1047-59.

Committee of Principal Investigators. A co-operative trial in the primary prevention of ischemic heart disease using clofibrate. Report from the Committee of Principal Investigators. *Br Heart J* 1978;40:1069-118.

Compliance and adverse event withdrawal: their impact on the West of Scotland Coronary Prevention Study. *Eur Heart J* 1997;18:1718-24.

Connor SL, Gustafson JR, Sexton G, Becker N, Artaud-Wild S, Connor WE. The Diet Habit Survey: A new method of dietary assessment that relates to plasma cholesterol changes. *J Am Diet Assoc* 1992;92:41-7.

Connor SL, Gustafson JR, Sexton G, Becker N, Artaud-Wild S, Connor WE. The Diet Habit Survey: A new method of dietary assessment that relates to plasma cholesterol changes. *J Am Diet Assoc* 1992;92:41-7.

Connor WE. Fish oil in hypertriglyceridemia: safety and recommendations. *Lipids* 1999;34 (suppl):S271.

Conroy RM, Mulcahy R, Hickey N, Daly L. Is a family history of coronary heart disease an independent coronary risk factor? *Br Heart J* 1985;53:378-81.

Constantinides P. Plaque hemorrhages, their genesis and their role in supraplaque thrombosis and atherogenesis. In: Giagov S, Newman WP, Schaffer SA, eds. In: Pathobiology of the human atherosclerotic plaque. New York: Springer-Verlag, 1990;393-411.

Cook DG, Mendall MA, Whincup PH, Carey IM, Ballam L, Morris JE, Miller GJ, Strachan DP. C-reactive protein concentrations in children: relationship to adiposity and other cardiovascular risk factors. *Atherosclerosis* 2000;149:139-50.

Cooper RS, Liao Y, Rotimi C. Is hypertension more severe among U.S. blacks, or is severe hypertension more common? *Ann Epidemiol* 1996;6:173-80.

Coronary Drug Project Research Group. Clofibrate and niacin in coronary heart disease. *JAMA* 1975:231:360-81.

Coronary Drug Project Research Group. Gallbladder disease as a side effect of drugs influencing lipid metabolism. Experience in the Coronary Drug Project. *N Engl J Med* 1977;296:1185-90.

Coronary Drug Project Research Group. Influence of adherence to treatment and response of cholesterol on mortality in the coronary drug project. *N Engl J Med* 1980;303:1038-41.

Craighead LW, Stunkard AJ, O'Brien RM. Behavior therapy and pharmacotherapy for obesity. *Arch Gen Psychiatry* 1981;38:763-8.

Creager MA. Results of the CAPRIE trial: efficacy and safety of clopidogrel. Clopidogrel versus aspirin in patients at risk of ischaemic events. *Vasc Med* 1998;3:257-60.

Cressman MD, Hoogwerf BJ, Moodie DS, Olin JW, Weinstein CE. HMG-CoA reductase inhibitors. A new approach to the management of hypercholesterolemia. *Cleve Clin J Med* 1988; 55:93-100.

Criqui MH, Coughlin SS, Fronek A. Noninvasively diagnosed peripheral arterial disease as a predictor of mortality: results from a prospective study. *Circulation* 1985;72:768-73.

Criqui MH, Golomb BA. Epidemiologic aspects of lipid abnormalities. *Am J Med* 1998a;105:48S-57S.

Criqui MH, Langer RD, Fronek A, Feigelson HS, Klauber MR, McCann TJ, Browner D. Mortality over a period of 10 years in patients with peripheral arterial disease. *N Engl J Med* 1992;326:381-6.

Criqui MH. Alcohol and coronary heart disease: consistent relationship and public health implications. *Clinica Chim Acta* 1996;246:51-7.

Criqui MH. Alcohol and hypertension: new insights from population studies. *Eur Health J* 1987;(suppl B)19-26.

Criqui MH. Alcohol in the myocardial infarction patient. *Lancet* 1998b;352:1873.

Croghan IT, Offord KP, Evans RW, Schmidt S, Gomez-Dahl LC, Schroeder DR, Patten CA, Hurt RD. Cost-effectiveness of treating nicotine dependence: the Mayo Clinic experience. *Mayo Clinic Proc* 1997;72:917-24.

Cromwell J, Bartosch WJ, Fiore MC, Hasselblad V, Baker T. Cost-effectiveness of the clinical practice recommendations in the AHCPR guideline for smoking cessation. Agency for Health Care Policy and Research. *JAMA* 1997;278:1759-66.

Crook D, Cust MP, Gangar KF, Worthington M, Hillard TC, Stevenson JC, Whitehead MI, Wynn V. Comparison of transdermal and oral estrogen-progestin replacement therapy: effects on serum lipids and lipoproteins. *Am J Obstet Gynecol* 1992;166:950-5.

Crouse JR III, Byington RP, Bond MG, Espeland MA, Craven TE, Sprinkle JW, McGovern ME, Furberg CD. Pravastatin, Lipids, and Atherosclerosis in the Carotid Arteries (PLAC-II). *Am J Cardiol* 1995;75:455-9.

Crouse JR III, Byington RP, Furberg CD. HMG-CoA reductase inhibitor therapy and stroke risk reduction: an analysis of clinical trials data. *Atherosclerosis* 1998;138:11-24.

Crouse JR III, Byington RP, Hoen HM, Furberg CD. Reductase inhibitor monotherapy and stroke prevention. *Arch Intern Med* 1997;157:1305-10.

Crouse JR III, Morgan T, Terry JG, Ellis J, Vitolins M, Burke GL. A randomized trial comparing the effect of casein with that of soy protein containing varying amounts of isoflavones on plasma concentrations of lipids and lipoproteins. *Arch Intern Med* 1999;159:2070-6.

Crouse JR III. Effects of statins on carotid disease and stroke. *Curr Opin Lipidol* 1999;10:535-41.

Crouse JR III. Hypertriglyceridemia: a contraindication to the use of bile acid binding resins. *Am J Med* 1987;83:243-8.

Cui Y, Blumenthal RS, Flaws JA, Whiteman MK, Langenberg P, Bachorik PS, Bush TL. Non-high-density lipoprotein cholesterol level as a predictor of cardiovascular disease mortality. *Arch Intern Med* 2001;161:1413-9.

Cullen P, Assmann G. Treatment goals for low-density lipoprotein cholesterol in the secondary prevention of coronary heart disease: absolute levels or extent of lowering? *Am J Cardiol* 1997;80:1287-94.

Cullen P, von Eckardstein A, Assmann G. Diagnosis and management of new cardiovascular risk factors. *Eur Heart J* 1998;19(suppl O):O13-9.

Cummings SR, Rubin SM, Oster G. The cost-effectiveness of counseling smokers to quit. *JAMA* 1989;261:75-9.

Current Procedural Terminology: CPT 2001. Chicago, Illinois; American Medical Association, 2000:300 pages.

Cushman M, Legault C, Barrett-Connor E, Stefanick ML, Kessler C, Judd HL, Sakkinen PA, Tracy RP. Effect of postmenopausal hormones on inflammation-sensitive proteins: the Postmenopausal Estrogen/Progestin Interventions (PEPI) Study. *Circulation* 1999;100:717-22.

Cutler JA, Psaty BM, MacMahon S, Furberg CD. Public health issues in hypertension control: what has been learned from clinical trials. In: Laragh JH, Brenner BM, eds. Hypertension: pathophysiology, diagnosis, and management;2nd ed. New York: Raven Press, 1995;253-70.

Cutter GR, Burke GL, Dyer AR, Friedman GD, Hilner JE, Hughes GH, Hulley SB, Jacobs DR, Liu K, Manolio TA, Oberman A, Perkins LL, Savage PJ, Serwitz JR, Sidney S, Wagenknecht LE. Cardiovascular risk factors in young adults. The CARDIA baseline monograph. *Control Clin Trials* 1991;12(1 suppl):1S-77S.

D'Agostino RB Sr., Grundy S, Sullivan LM, Wilson P. CHD Risk Prediction Group. Validation of the Framingham coronary heart disease prediction scores: results of a multiple ethnic groups investigation. *JAMA* 2001;286:180-7.

DAIS Investigators. Effect of fenofibrate on progression of coronary-artery disease in type 2 diabetes: the Diabetes Atherosclerosis Intervention Study, a randomised study. *Lancet* 2001;357:905-10.

Daltroy LH, Godin G. The influence of spousal approval and patient perception of spousal approval on cardiac participation in exercise programs. *J Cardiopulmonary Rehabilitation* 1989;9:363-7.

Danesh J, Collins R, Peto R. Lipoprotein(a) and coronary heart disease. Meta-analysis of prospective studies. *Circulation* 2000;102:1082-5.

Davidson MH, Dillon MA, Gordon B, Jones P, Samuels J, Weiss S, Isaacsohn J, Toth P, Burke SK. Colesevelam hydrochloride (cholestagel): a new, potent bile acid sequestrant associated with a low incidence of gastrointestinal side effects. *Arch Intern Med* 1999;159:1893-1900.

Davidson MH, Dugan LD, Burns JH, Bova J, Story K, Drennan KB, Anderson V, Fulgoni L, Saldanha L, Olson B. The hypocholesterolemic effects of beta-glucan in oatmeal and oat bran. A dose-controlled study. *JAMA* 1991;265:1833-9.

Davidson MH, Stein EA, Hunninghake DB, Ose L, Dujovne CA, Insull W Jr., Bertolami M, Weiss SR, Kastelein JJ, Scott RS, Campodonico S, Escobar ID, Schrott HG, Bays H, Stepanavage ME, Wu M, Tate AC, Melino MR, Kush D, Mercuri M, Mitchel YB for the Worldwide Expanded Dose Simvastatin Study Group. Lipid-altering efficacy and safety of simvastatin 80 mg/day: Worldwide long-term experience I patients with hypercholesterolemia. *Nutr Metab Cardiovasc Dis* 2000;10:253-262.

Davidson MH, Toth P, Weiss S, McKenney J, Hunninghake D, Isaacsohn J, Donovan JM, Burke SK. Low-dose combination therapy with colesevelam hydrochloride and lovastatin effectively decreases low-density lipoprotein cholesterol in patients with primary hypercholesterolemia. *Clin Cardiol* 2001;24:467-74.

Davidson MH. Does differing metabolism by cytochrome P450 have clinical importance? *Curr Atheroscler Reports* 2000;2:14-9.

Daviglus ML, Stamler J, Orencia AJ, Dyer AR, Liu K, Greenland P, Walsh MK, Morris D, Shekelle RB. Fish consumption and the 30-year risk of fatal myocardial infarction. *N Engl J Med* 1997;336:1046-53.

Davignon J, Montigny M, Dufour R. HMG-CoA reductase inhibitors: a look back and a look ahead. *Can J Cardiol* 1992;8:843-64.

Davignon J, Roederer G, Montigny M, Hayden MR, Tan MH, Connelly PW, Hegele R, McPherson R, Lupien PJ, Gagne C. Comparative efficacy and safety of pravastatin, nicotinic acid, and the two combined in patients with hypercholesterolemia. *Am J Cardiol* 1994;73:339-45.

Davis BR, Cutler JA, Gordon DJ, et al. Rationale and design for the Antihypertensive and Lipid Lowering Treatment to Prevent Heart Attack Trial (ALLHAT) *Am J Hypertens* 1996;9:342-60.

Davis DA, Thomson MA, Oxman AD, Haynes RB. Changing physician performance. A systematic review of the effect of continuing medication education strategies. *JAMA* 1995;274:700-5.

Dayton S, Pearce ML, Goldman H, Harnish A, Plotkin D, Shickman M, Winfield M, Zager A, Dixon W. Controlled trial of a diet high in unsaturated fat for prevention of atherosclerotic complications. *Lancet* 1968;2:1060-102.

de Koning HJ, van Ineveld BM, van Oortmarssen GJ, de Haes JC, Collette HJ, Hendriks JH, van der Maas PJ. Breast cancer screening and cost-effectiveness: policy alternatives, quality of life considerations, and the possible impact of uncertain factors. *Int J Cancer* 1991;49:531-7.

de Lorgeril M, Salen P, Martin JL, Monjaud I, Boucher P, Mamelle N: Mediterranean dietary pattern in a randomized trial: prolonged survival and possible reduced cancer rate. *Arch Intern Med* 1998;158:1181-7.

de Lorgeril M, Salen P, Martin JL, Monjaud I, Delaye J, Mamelle N. Mediterranean diet, traditional risk factors, and the rate of cardiovascular complications after myocardial infarction: Final report of the Lyon Diet Heart Study. *Circulation* 1999;99:779-85.

de Vreede-Swagemakers JJM, Gorgels APM, Dubois-Arbouw WI, van Ree JW, Daemen MJAP, Houben LGE, Wellens HJJ. Out-of-hospital cardiac arrest in the 1990s: a population-based study in the Maastricht area on incidence, characteristics and survival. *J Am Coll Cardiol* 1997;30:1500-5.

Deaths for 282 selected causes by 5-year age groups, race, and sex: United States, 1979–98. Retrieved from http://www.cdc.gov/nchs/datawh/statab/unpubd/mortabs/gmwk292.html

DeBusk RF, Miller NH, Superko HR, Dennis CA, Thomas RJ, Lew HT, Berger WE III, Heller RS, Rompf J, Gee D, Kraemer HC, Bandura A, Ghandour G, Clark M, Shah RV, Fisher L, Taylor CB. A case-management system for coronary risk factor modification after acute myocardial infarction. *Ann Intern Med* 1994;120:721-9.

Dengel DR, Galecki AT, Hagberg JM, Pratley RE. The independent and combined effects of weight loss and aerobic exercise on blood pressure and oral glucose tolerance in older men. *Am J Hypertens* 1998;11:1405-12.

Denke MA, Grundy SM. Efficacy of low-dose cholesterol-lowering drug therapy in men with moderate hypercholesterolemia. *Arch Intern Med* 1995;155:393-9.

Denke MA, Grundy SM. Hypercholesterolemia in elderly persons: resolving the treatment dilemma. *Ann Intern Med* 1990;112:780-92.

Denke MA, Grundy SM. Individual responses to a cholesterol-lowering diet in 50 men with moderate hypercholestrolemia. *Arch Intern Med* 1994;154:317-25.

Denke MA, Sempos CT, Grundy SM. Excess body weight. An underrecognized contributor to high blood cholesterol levels in white American men. *Arch Intern Med* 1993;153:1093-103.

Denke MA, Sempos CT, Grundy SM. Excess body weight. An underrecognized contributor to dyslipidemia in white American women. *Arch Intern Med* 1994;154:401-10.

Denke MA. Individual responsiveness to a cholesterol-lowering diet in postmenopausal women with moderate hypercholesterolemia. *Arch Intern Med* 1994;154:1977-82.

Denke MA. Review of human studies evaluating individual dietary responsiveness in patients with hypercholesterolemia. *Am J Clin Nutr* 1995;62:471S-77S.

Despres JP. Abdominal obesity as important component of insulin-resistance syndrome. *Nutrition* 1993;9:452-9.

Despres JP. The insulin resistance-dyslipidemic syndrome of visceral obesity: effect on patients' risk. *Obes Res* 1998;6(suppl 1):8S-17S.

Detrano RC, Wong ND, Doherty TM, Shavelle RM, Tang W, Ginzton LE, Budoff MJ, Narahara KA. Coronary calcium does not accurately predict near-term future coronary events in high-risk adults. *Circulation* 1999;99:2633-8.

Devaraj S, Vega G, Lange R, Grundy SM, Jialal I. Remnant-like particle cholesterol levels in patients with dysbetalipoproteinemia or coronary artery disease. *Am J Med* 1998;104:445-50.

Devlin JT. Effects of exercise on insulin sensitivity in humans. *Diabetes Care* 1992;15:1690-3.

Diabetes Control and Complications Trial Research Group (DCCT). The effect of intensive treatment of diabetes on the development and progression of long-term complications in insulin-dependent diabetes mellitus. *N Engl J Med* 1993;329:977-86.

Dietrich AJ, O'Connor GT, Keller A, Carney PA, Levy D, Whaley FS. Cancer: improving early detection and prevention. A community practice randomised trial. *BMJ* 1992;304:687-91.

Do KA, Green A, Guthrie JR, Dudley EC, Burger HG, Dennerstein L. Longitudinal study of risk factors for coronary heart disease across the menopausal transition. *Am J Epidemiol* 2000;151:584-93.

Dolecek TA, Grandits G. Dietary polyunsaturated fatty acids and mortality in the Multiple Risk Factor Intervention Trial (MRFIT). *World Rev Nutr Diet* 1991;66:205-16.

Doll R, Gray R, Hafner B, Peto R. Mortality in relation to smoking: 22 years' observations on female British doctors. *BMJ* 1980;280:967-71.

Doll R, Peto R. Mortality in relation to smoking: 20 years' observations on male British doctors. *BMJ* 1976;2:1525-36.

Donner MG, Klein GK, Mathes PB, Schwandt P, Richter WO. Plasma total homocysteine levels in patients with early-onset coronary heart disease and a low cardiovascular risk profile. *Metabolism* 1998;47:273-9.

Douzdjian V, Ferrara D, Silvestri G. Treatment strategies for insulin-dependent diabetics with ESRD: a cost-effectiveness decision analysis model. *Am J Kidney Dis* 1998;31:794-802.

Downs JR, Clearfield M, Weis S, Whitney E, Shapiro DR, Beere PA, Langendorfer A, Stein EA, Kruyer W, Gotto AM Jr. Primary prevention of acute coronary events with lovastatin in men and women with average cholesterol levels: results of AFCAPS/TexCAPS. Air Force/Texas Coronary Atherosclerosis Prevention Study. *JAMA* 1998;279:1615-22.

Drood JM, Zimetbaum PJ, Fishman WH. Nicotinic acid for the treatment of hyperlipoproteinemia. *J Clin Pharmacol* 1991;31:641-50.

Duell PB, Connor WE, Illingworth DR. Rhabdomyolysis after taking atorvastatin with gemfibrozil. *Am J Cardiol* 1998;81:368-9.

Dufour MC. If you drink alcoholic beverages do so in moderation: what does this mean? *J Nutr* 2001;131(suppl 1):552S-61S.

Dunn FL, Grundy SM, Bilheimer DW, Havel RJ, Raskin P. Impaired catabolism of very low-density lipoprotein-triglyceride in a family with primary hypertriglyceridemia. Metab 1985;34:316-24.

Durrington PN. Diabetic dyslipidaemia. *Baillieres Best Pract Res Clin Endocrinol Metab* 1999;13:265-78.

Dyer AR, Liu K, Walsh M, Kiefe C, Jacobs DR Jr., Bild DE. Ten-year incidence of elevated blood pressure and its predictors: the CARDIA study. Coronary Artery Risk Development in (Young) Adults. *J Hum Hypertens* 1999;13:13-21.

East C, Bilheimer DW, Grundy SM. Combination drug therapy for familial combined hyperlipidemia. *Ann Intern Med* 1988;109:25-32.

East CA, Grundy SM, Bilheimer DW. Preliminary report: treatment of type 3 hyperlipoproteinemia with mevinolin. *Metabolism* 1986;35:97-8.

Eaton CB, Bostom AG, Yanek L, Laurino JP, McQuade W, Hume A, Selhub J. Family history and premature coronary heart disease. *J Am Board Fam Pract* 1996;9:312-8.

Ebara T, Ramakrishnan R, Steiner G, Shachter NS. Chylomicronemia due to apolipoprotein CIII overexpression in apolipoprotein E-null mice. Apolipoprotein CIII-induced hypertriglyceridemia is not mediated by effects on apolipoprotein E. *J Clin Invest* 1997;99:2672-81.

Eccles M, Freemantle N, Mason J. North of England evidence based guideline development project: guideline on the use of aspirin as secondary prophylaxis for vascular disease in primary care. North of England Aspirin Guideline Development Group. *BMJ* 1998;316:1303-9.

Eckel RH, Krauss RM. American Heart Association call to action: obesity as a major risk factor for coronary heart disease. AHA Nutrition Committee. *Circulation* 1998;97:2099-100.

Eckel RH. Obesity and heart disease: a statement for healthcare professionals from the Nutrition Committee, American Heart Association. *Circulation* 1997;96:3248-50.

Eddy DM, Hasselblad V, McGivney W, Hendee W. The value of mammography screening in women under age 50 years. *JAMA* 1988;259:1512-9.

Edelson JT, Weinstein MC, Tosteson AN, Williams L, Lee TH, Goldman L. Long-term cost-effectiveness of various monotherapies for mild to moderate hypertension. *JAMA* 1990;263:407-13.

Edelstein SL, Knowler WC, Bain RP, Andres R, Barrett-Connor EL, Dowse GK, Haffner SM, Pettitt DJ, Sorkin JD, Muller DC, Collins VR, Hamman RF. Predictors of progression from impaired glucose tolerance to NIDDM: an analysis of six prospective studies. *Diabetes* 1997;46:701-10.

Edmonds D, Foerster E, Groth H, Greminger P, Siegenthaler W, Vetter W. Does self-measurement of blood pressure improve patient compliance in hypertension? *J Hypertens Suppl* 1985;3:S31-S34.

Eisenberg S, Gavish D, Oschry Y, Fainaru M, Deckelbaum RJ. Abnormalities in very low, low and high density lipoproteins in hypertriglyceridemia. Reversal toward normal with bezafibrate treatment. *J Clin Invest* 1984;74:470-82.

Eisenhauer T, Armstrong VW, Wieland H, Fuchs C, Nebendahl K, Scheler F, Seidel D. Selective continuous elimination of low density lipoproteins (LDL) by heparin precipitation: first clinical application. *ASAIO Trans* 1986;32:104-7.

Ekelund LG, Haskell WL, Johnson JL, Whaley FS, Criqui MH, Sheps DS. Physical fitness as a predictor of cardiovascular mortality in asymptomatic North American men: the Lipid Research Clinics Mortality Follow-up Study. *N Engl J Med* 1988;319:1379-84.

Elam MB, Hunninghake DB, Davis KB, Garg R, Johnson C, Egan D, Kostis JB, Sheps DS, Brinton EA. Effect of niacin on lipid and lipoprotein levels and glycemic control in patients with diabetes and peripheral arterial disease: the ADMIT study: A randomized trial. Arterial Disease Multiple Intervention Trial. *JAMA* 2000;284:1263-70.

Ellen RL, McPherson R. Long-term efficacy and safety of fenofibrate and a statin in the treatment of combined hyperlipidemia. *Am J Cardiol* 1998;81:60B-65B.

Enas EA, Yusuf S, Sharma S. Coronary artery disease in South Asians. Second meeting of the International Working Group. 16 March 1997, Anaheim, California. *Indian Heart J* 1998;50:105-13.

Endo A. The discovery and development of HMG-CoA reductase inhibitors. *J Lipid Res* 1992;33:1569-82.

Ericsson CG, Hamsten A, Nilsson J, Grip L, Svane B, de Faire U. Angiographic assessment of effects of bezafibrate on progression of coronary artery disease in young male postinfarction patients. *Lancet* 1996;347:849-53.

Ernst E. Fibrinogen: its emerging role as a cardiovascular risk factor. *Angiology* 1994;45:87-93.

Ernst ND, Sempos CT, Briefel RR, Clark MB. Consistency between U.S. dietary fat intake and serum total cholesterol concentrations: the National Health and Nutrition Examination Surveys. *Am J Clin Nutr* 1997;66(suppl 4):965S-72S.

Esrey KL, Joseph L, Grover SA. Relationship between dietary intake and coronary heart disease mortality: lipid research clinics prevalence follow-up study. *J Clin Epidemiol* 1996;49:211-6.

Etchason JA, Miller TD, Squires RW, Allison TG, Gau GT, Marttila JK, Kottke BA. Niacin-induced hepatitis: a potential side effect with low-dose time-release niacin. *Mayo Clinic Proc* 1991;66:23-8.

Evans RW, Shaten BJ, Hempel JD, Cutler JA, Kuller LH. Homocyst(e)ine and risk of cardiovascular disease in the Multiple Risk Factor Intervention Trial. *Arterioscler Throm Vasc Biol* 1997;17:1947-53.

Everson GT, Daggy BP, McKinley C, Story J. Effects of psyllium hydrophilic mucilloid on LDL-synthesis and bile acid synthesis in hypercholesterolemic men. *J Lipid Res* 1992;33:1183-92.

Executive Committee for the Asymptomatic Carotid Atherosclerosis Study. Endarterectomy for Asymptomatic Carotid Artery Stenosis. *JAMA* 1995;273:1421-8.

Faergemen O. New British recommendations for prevention of coronary heart disease in clinical practice [Editorial]. *Heart* 1999;81:335.

Falk E, Shah PK, Fuster V. Coronary plaque disruption. *Circulation* 1995;92:657-71.

Falkner B, Sherif K, Sumner AE, Kushner H. Blood pressure increase with impaired glucose tolerance in young adult American blacks. *Hypertension* 1999;34:1086-90.

Farnier M, Dejager S. Effect of combined fluvastatin-fenofibrate therapy compared with fenofibrate monotherapy in severe primary hpercholesterolemia. French Fluvastatin Study Group. *Am J Cardiol* 2000;85:53-7.

Farrell SW, Kampert JB, Kohl HW III, Barlow CE, Macera CA, Paffenbarger RS Jr., Gibbons LW, Blair SN. Influences of cardiorespiratory fitness levels and other predictors on cardiovascular disease mortality in men. *Med Sci Sports Exerc* 1998;30:899-905.

Feher M, Webb JC, Patel DD, Lant AF, Mayne PD, Knight BL, Soutar AK. Cholesterol-lowering drug therapy in a patient with receptor-negative homozygous familial hypercholesterolaemia. *Atherosclerosis* 1993;103:171-80.

Feit F, Brooks MM, Sopko G, Keller NM, Rosen A, Krone R, Berger PB, Shemin R, Attubato MJ, Williams DO, Frye R, Detre KM. Long-term clinical outcome in the Bypass Angioplasty Revascularization Investigation registry: comparison with the randomized trial. BARI Investigators. *Circulation* 2000;101:2795-802.

Ferguson GC, Eliasziw M, Barr HW, Clagett P, Barnes RW, Wallace C, Taylor W, Haynes B, Finan JW, Hachinski VC, Barnett HJ, for the North American Symptomatic Carotid Endarterectomy Trial (NASCET) Collaborators. The North American Symptomatic Carotid Endarterectomy Trial. Surgical Results in 1415 Patients. *Stroke* 1999;30:1751-8.

Ferguson JA, Tierney WM, Westmoreland GR, Mamlin LA, Segar DS, Eckert GJ, Zhou X, Martin DK, Weinberger M. Examination of racial differences in management of cardiovascular disease. *J Am Coll Cardiol* 1997;30:1707-13.

Finnerty FA Jr., Shaw LW, Himmelsbach CK. Hypertension in the inner city. II. Detection and follow-up. *Circulation* 1973;47:76-8.

Fiscella K, Franks P. Cost-effectiveness of the transdermal nicotine patch as an adjunct to physicians' smoking cessation counseling. *JAMA* 1996;275:1247-51.

Fitzgibbon ML, Stolley MR, Kirschenbaum DS. An obesity prevention pilot program for African-American mothers and daughters. *J Nutr Educ* 1995;27:93-9.

Fletcher GF, Balady G, Blair SN, Blumenthal J, Caspersen C, Chaitman B, Epstein S, Sivarajan Froelicher ES, Froelicher VF, Pina IL, Pollock ML. Statements on exercise: benefits and recommendations for physical activity programs for all Americans. A statement for health professionals by the Committee on Exercise and Cardiac Rehabilitiation of the Council on Clinical Cardiology. American Heart Association. *Circulation* 1996;94:857-62.

Fodor JG, Frohlich JJ, Genest JJ Jr., McPherson PR. Recommendations for the management and treatment of dyslipidemia. Report of the Working Group on Hypercholesterolemia and Other Dyslipidemias. *CMAJ* 2000;162:1441-7.

Folsom AR, Nieto FJ, McGovern PG, Tsai MY, Malinow MR, Eckfeldt JH, Hess DL, Davis CE. Prospective study of coronary heart disease incidence in relation to fasting total homocysteine, related genetic polymorphisms, and B vitamins: the Atherosclerosis Risk in Communities (ARIC) study. *Circulation* 1998;98:204-10.

Fonorow G, Gawlinski A. Rationale and design of the Cardiac Hospitalization Atherosclerosis Management Program at the University of California, Los Angeles. *Am J Cardiol* 2000;85:10A-17A.

Fontbonne AM, Eschwege EM. Insulin and cardiovascular disease. Paris Prospective Study. *Diabetes Care* 1991;14:461-9.

Foody JM, Milberg JA, Robinson K, Pearce GL, Jacobsen DW, Sprecher DL. Homocysteine and lipoprotein(a) interact to increase CAD risk in young men and women. *Arterioscler Thromb Vasc Biol* 2000;20:493-9.

Ford ES. Body mass index, diabetes, and C-reactive protein among U.S. adults. *Diabetes Care* 1999;22:1971-7.

Fortson MR, Freedman SN, Webster PD III. Clinical assessment of hyperlipidemic pancreatitis. *Am J Gastroenterol* 1995;90:2134-9.

Franceschi S, Favero A, Decarli A, Negri E, LaVecchia C, Ferraroni M, Russo A, Salvini S, Amadori D, Conti E, Montella M, Giacosa A. Intake of macronutrients and risk of breast cancer. *Lancet* 1996;347:1351-6.

Franklin SS, Khan SA, Wong ND, Larson MG, Levy D. Is pulse pressure useful in predicting risk for coronary heart disease? The Framingham Heart Study. *Circulation* 1999;100:354-60.

Frantz ID Jr., Dawson EA, Ashman PI, Gatewood LC, Bartsch GE, Kuba K, Brewer ER. Test of effect of lipid lowering by diet on cardiovascular risk. The Minnesota Coronary Survey. *Arteriosclerosis* 1989;9:129-35.

Fredrickson DS, Levy RI, Lees RS. Fat transport in lipoproteins – an integrated approach to mechanisms and disorders. *N Engl J Med* 1967a;276:34-42.

Fredrickson DS, Levy RI, Lees RS. Fat transport in lipoproteins – an integrated approach to mechanisms and disorders (continued). *N Engl J Med* 1967b;276:94-103.

Fredrickson DS, Levy RI, Lees RS. Fat transport in lipoproteins – an integrated approach to mechanisms and disorders (continued). *N Engl J Med* 1967c;276:148-56.

Fredrickson DS, Levy RI, Lees RS. Fat transport in lipoproteins – an integrated approach to mechanisms and disorders (continued). *N Engl J Med* 1967d;276:215-25.

Fredrickson DS, Levy RI, Lees RS. Fat transport in lipoproteins – an integrated approach to mechanisms and disorders (concluded). *N Engl J Med* 1967e;276:273-81.

Freis ED. The efficacy and safety of diuretics in treating hypertension. *Ann Intern Med* 1995;122:223-6.

Frick MH, Elo MO, Haapa K, Heinonen OP, Heinsalmi P, Helo P, Huttunen JK, Kaitaniemi P, Koskinen P, Manninen V. Helsinki Heart Study: Primary-prevention trial with gemfibrozil in middle-aged men with dyslipidemia. Safety of treatment, changes in risk factors, and incidence of coronary heart disease. *N Engl J Med* 1987;317:1237-45.

Frick MH, Syvanne M, Nieminen MS, Kauma H, Majahalme S, Virtanen V, Kesaniemi YA, Pasternack A, Taskinen MR. Prevention of the angiographic progression of coronary and vein-graft atherosclerosis by gemfibrozil after coronary bypass surgery in men with low levels of HDL cholesterol. Lopid Coronary Angiography Trial (LOCAT) Study Group. *Circulation* 1997;96:2137-43.

Friedewald WT, Levy RI, Frederickson DS. Estimation of the concentration of low-density lipoprotein cholesterol in plasma, without use of the preparative ultracentrifuge. *Clin Chem* 1972;18;499-502.

Friedman RH, Kazis LE, Jette A, Smith MB, Stollerman J, Torgerson J, Carey K. A telecommunications system for monitoring and counseling patients with hypertension. Impact on medication adherence and blood pressure control. *Am J Hypertens* 1996;9:285-92.

Frohlich J, Fodor G, McPherson R, Genest J, Langner N. Rationale for and outline of the recommendations of the Working Group on Hypercholesterolemia and Other Dyslipidemias: interim report. Dyslipidemia Working Group of Health Canada. *Can J Cardiol* 1998;14(suppl A):17A-21A.

Frolkis JP, Zyzanski SJ, Schwartz JM, Suhan PS. Physician noncompliance with the 1993 National Cholesterol Education Program (NCEP-ATP II) guidelines. *Circulation* 1998;98:851-5.

Frost PH, Havel RJ. Rationale for use of non-high-density lipoprotein cholesterol rather than low-density lipoprotein cholesterol as a tool for lipoprotein cholesterol screening and assessment of risk and therapy. *Am J Cardiol* 1998;81:26B-31B.

Fruchart JC, Brewer HB Jr., Leitersdorf E. Consensus for the use of fibrates in the treatment of dyslipoproteinemia and coronary heart disease. Fibrate Consensus Group. *Am J Cardiol* 1998;81:912-7.

Furberg CD, Adams HP Jr., Applegate WB, Byington RP, Espeland MA, Hartwell T, Hunninghake DB, Lefkowitz DS, Probstfield J, Riley WA, Young B. Effect of lovastatin on early carotid atherosclerosis and cardiovascular events. Asymptomatic Carotid Artery Progression Study (ACAPS) Research Group. *Circulation* 1994;90:1679-87.

Fuster V, Fayad ZA, Badimon JJ. Acute coronary syndromes: biology. *Lancet* 1999;353(suppl 2):SII5-9.

Fuster V, Lewis A. Conner Memorial Lecture. Mechanisms leading to myocardial infarction: insights from studies of vascular biology. *Circulation* 1994;90:2126-46.

Galton DJ. Common genetic determinants of dyslipidemia: the hypertriglyceridemia/low-high-density lipoprotein syndrome. *J Cardiovasc Pharmacol* 1995;25(suppl 4):S35-40.

Gans KM, Lapane KL, Lasater TM, Carleton RA. Effects of intervention on compliance to referral and lifestyle recommendations given at cholesterol screening programs. *Am J Prev Med* 1994;10:275-82.

Gans KM, Sundaram SG, McPhillips JB, Hixson ML, Linnan L, Carleton RA. Rate your plate: An eating pattern assessment and educational tool used at cholesterol screening and education programs. *J Nutr Educ* 1993;25:29-36.

Gans KM, Sundaram SG, McPhillips JB, Hixson ML, Linnan L, Carleton RA. Rate your plate: An eating pattern assessment and educational tool used at cholesterol screening and education programs. *J Nutr Educ* 1993;25:29-36.

Gardner CD, Fortmann SP, Krauss RM. Association of small low-density lipoprotein particles with the incidence of coronary artery disease in men and women. *JAMA* 1996;276:875-81.

Garg A, Bantle JP, Henry RR, Coulston AM, Griver KA, Raatz SK, Brinkley L, Chen YD, Grundy SM, Huet BA, et al. Effects of varying carbohydrate content of diet in patients with non-insulin-dependent diabetes mellitus. *JAMA* 1994;271:1421-8.

Garg A, Grundy SM, Unger RH. Comparison of effects of high and low carbohydrate diets on plasma lipoproteins and insulin sensitivity in patients with mild NIDDM. *Diabetes* 1992;41:1278-85.

Garg A, Grundy SM. Cholestyramine therapy for dyslipidemia in non-insulin-dependent diabetes mellitus. A short-term, double-blind, crossover trial. *Ann Intern Med* 1994;121:416-22.

Garg A, Grundy SM. Gemfibrozil alone and in combination with lovastatin for treatment of hypertriglyceridemia in NIDDM. *Diabetes* 1989;38:364-72.

Garg A, Grundy SM. Nicotinic acid as therapy for dyslipidemia in non-insulin-dependent diabetes mellitus. *JAMA* 1990;264:723-6.

Garg A. High-monounsaturated-fat diets for patients with diabetes mellitus: a meta-analysis. *Am J Clin Nutr* 1998;67(suppl 3):577S-82S.

Garg A. Lipodystrophies. *Am J Med* 2000;108:142-52.

Garrison RJ, Wilson PW, Castelli WP, Feinleib M, Kannel WB, McNamara PM. Obesity and lipoprotein cholesterol in the Framingham offspring study. *Metabolism* 1980;29:1053-60.

Gavin JR III. Diabetes in Minorities: Reflections on the medical dilemma and the health care crisis. *Trans Am Clin Climatol Assoc* 1995;107:213-23.

Gavin JR, Alberti KGMM, Davidson MB, DeFronzo RA, Drash A, Gabbe SG, Genuth S, Harris MI, Kahn R, Keen H, Knowler WC, Lebovitz H, Maclaren NK, Palmer JP, Raksin P, Rizza RA, Stern MP. Report of the Expert Committee on the Diagnosis and Classification of Diabetes Mellitus. *Diabetes Care* 1998;21:S5-S19.

Gavish D, Oschry Y, Fainaru M, Eisenberg S. Change in very low-, low- and high-density lipoproteins during lipid-lowering (bezafibrate) therapy: studies in type IIA and type IIB hyperlipoproteinemia. *Eur J Clin Invest* 1986;16:61-8.

Gerstein HC, Pais P, Pogue J, Yusuf S. Relationship of glucose and insulin levels to the risk of myocardial infarction: a case-control study. *J Am Coll Cardiol* 1999;33:612-9.

Gibbons LW, Gonzalez V, Gordon N, Grundy S. The prevalence of side effects with regular and sustained-release nicotinic acid. *Am J Med* 1995;99:378-85.

Giles WH, Croft JB, Greenlund KJ, Ford ES, Kittner SJ. Association between total homocyst(e)ine and the likelihood for a history of acute myocardial infarction by race and ethnicity: Results from the Third National Health and Nutrition Examination Survey. *Am Heart J* 2000;139:446-53.

Gillum RF, Mussolino ME, Madans JH. Coronary heart disease incidence and survival in African-American women and men. The NHANES I Epidemiologic Follow-up Study. *Ann Intern Med* 1997;127:111-8.

Gillum RF. Sudden cardiac death in Hispanic Americans and African Americans. *Am J Public Health* 1997;87:1461-6.

Ginsberg HN, Kris-Etherton P, Dennis B, Elmer PJ, Ershow A, Lefevre M, Pearson T, Roheim P, Ramakrishnan R, Reed R, Stewart K, Stewart P, Phillips K, Anderson N, for the Delta Research Group. Effects of reducing dietary saturated fatty acids on plasma lipids and lipoproteins in healthy subjects. The Delta Study, Protocol 1. *Arterioscler Thromb Vasc Biol* 1998;18:441-9.

Giovannucci E, Goldin B. The role of fat, fatty acids, and total energy intake in the etiology of human colon cancer. *Am J Clin Nutr* 1997;66(suppl 6):1564S-71S.

GISSI-Prevenzione Investigators. Dietary supplementation with n-3 polyunsaturated fatty acids and vitamin E after myocardial infarction: results of the GISSI-Prevenzione trial. *Lancet* 1999;354:447-55.

Gjonca A, Bobak M. Albanian paradox, another example of protective effect of Mediterranean lifestyle? *Lancet* 1997;350:1815-17.

Glanz K, Patterson RE, Kristal AR, DiClemente CC, Heimendinger J, Linnan L, McLerran DF. Stages of change in adopting healthy diets: fat, fiber, and correlates of nutrient intake. *Health Educ Q* 1994;21:499-519. [Erratum, *Health Educ Q* 1994;22:261].

Glasziou PP, Mulray SE, Hall JP, Martin A, Harris P, Thompson P, Tonkin A, Simes RJ. Cost effectiveness with pravastatin in patients with coronary heart disease and average cholesterol level (abstract). *Med Decis Making* 1998;18:475.

Glick H, Heyse JF, Thompson D, Epstein RS, Smith ME, Oster G. A model for evaluating the cost-effectiveness of cholesterol-lowering treatment. *Int J Tech Assess Health Care* 1992;8:719-34.

Glueck CJ, Gartside F, Fallart RW, Sielski J, Steiner PM. Longevity syndromes: Familial hypobeta- and familial hyperalphalipoproteinemia. *J Lab Clin Med* 1976;88:941-57.

Glueck CJ, Gordon DJ, Nelson JJ, Davis CE, Tyroler HA. Dietary and other correlates of changes in total and low density lipoprotein cholesterol in hypercholesterolemic men: the Lipid Research Clinics Coronary Primary Prevention Trial. *Am J Clin Nutr* 1986;44:489-500.

Gokal R, Mann JI, Moore RA, Morris PJ. Hyperlipidaemia following renal transplantation: a study of the prevalence, "natural history," and dietary treatment. *Q J Med* 1979;48:507-17.

Goldberg A, Alagona P Jr., Capuzzi DM, Guyton J, Morgan JM, Rodger J, Sachson R, Samuel P. Multiple-dose efficacy and safety of an extended-release form of niacin in the management of hyperlipidemia. *Am J Cardiol* 2000;85:1100-5.

Goldberg AC, Schonfeld G, Feldman EB, Ginsberg HN, Hunninghake DB, Insull W, Knopp RH Jr., Kwiterovich PO, Mellies MJ, Pickering J, Samuel P. Fenofibrate for the treatment of type IV and V hyperlipoproteinemias: a double-blind, placebo-controlled multicenter U.S. study. *Clin Ther* 1989;11:69-83.

Goldberg RB, Mellies MJ, Sacks FM, Moyé LA, Howard BV, Howard WJ, Davis BR, Cold TG, Pfeffer MA, Braunwald E. Cardiovascular events and their reduction with pravastatin in diabetic and glucose-intolerant myocardial infarction survivors with average cholesterol levels. Subgroup analyses in the cholesterol and recurrent events (CARE) trial. *Circulation* 1998;98:2513-9.

Goldberg RJ, Burchfiel CM, Benfante R, Chiu D, Reed DM, Yano K. Lifestyle and biologic factors associated with atherosclerotic disease in middle-aged men. 20-year findings from the Honolulu Heart Program. *Arch Intern Med* 1995;155:686-94.

Goldman JA, Fishman AB, Lee JE, Johnson RJ. The role of cholesterol-lowering agents in drug-induced rhabdomyolysis and polymyositis. [Letter to the Editor]. *Arthritis Rheum* 1989;32:358-9.

Goldman L, Coxson P, Hunink MG, Goldman PA, Tosteson AN, Mittleman M, Williams L, Weinstein MC. The relative influence of secondary versus primary prevention using the National Cholesterol Education Program Adult Treatment Panel II guidelines. *J Am Coll Cardiol* 1999;34:768-76.

Goldstein JL, Brown MS. Familial hypercholesterolemia. In: Scriver CR, Beaud et al., Sly WS, Vallee D, eds. The metabolic basis of inherited disease. New York: McGraw-Hill, 1989;1215-50.

Goldstein JL, Brown MS. Familial hypercholesterolemia. In: Scriver CR, Beaud et al., Sly WS, Valle D, eds. The metabolic basis of inherited disease. New York: McGraw-Hill, 1995; 198-203.

Goldstein JL, Hazzard WR, Schrott HG, Bierman EL, Motulsky AG. Hyperlipidemia in coronary heart disease. I. Lipid levels in 500 survivors of myocardial infarction. *J Clin Invest* 1973a;52:1533-43.

Goldstein JL, Schrott HG, Hazzard WR, Bierman EL, Motulsky AG. Hyperlipidemia in coronary heart disease. Genetic analysis of lipid levels in 176 families and delineation of a new inherited disorder, combined hyperlipidemia. *J Clin Invest* 1973b;52:1544-68.

Golper TA, Illingworth DR, Morris CD, Bennett WM. Lovastatin in the treatment of multifactorial hyperlipidemia associated with proteinuria. *Am J Kidney Dis* 1989;13:312-20.

Gordon DJ, Probstfield JL, Garrison RJ, Neaton JD, Castelli WP, Knoke JD, Jacobs DR Jr., Bangdiwala S, Tyroler HA. High-density lipoprotein cholesterol and cardiovascular disease: Four prospective American studies. *Circulation* 1989;79:8-15.

Gordon DJ. Cholesterol lowering and total mortality. In: Rifkind BM, ed. Contemporary issues in cholesterol lowering: clinical and population aspects. New York: Marcel Dekker Inc., 1994;33-48.

Gordon DJ. Cholesterol and mortality: what can meta-analysis tell us. In: Gallo LL, ed. Cardiovascular disease 2: cellular and molecular mechanisms, prevention, and treatment. New York: Plenum Press, 1995a;333-40.

Gordon DJ. Cholesterol lowering and total mortality. In: Rifkind BM, ed. Lowering cholesterol in high-risk individuals and populations. New York: Marcel Dekker Inc., 1995b;33-47.

Gordon DJ. Cholesterol lowering reduces mortality: the statins. In: Grundy SM, ed. Cholesterol-lowering therapy: evaluation of clinical trial evidence. New York: Marcel Dekker Inc., 2000; 299-311.

Gotto AM Jr., Grundy SM. Lowering LDL cholesterol: questions from recent meta-analyses and subset analyses of clinical trial data issues from the Interdisciplinary Council on Reducing the Risk for Coronary Heart Disease, Ninth Council Meeting. *Circulation* 1999;99:E1-7.

Gotto AM Jr., Whitney E, Stein EA, Shapiro DR, Clearfield M, Weis S, Jou JY, Langendörfer A, Beere PA, Watson DJ, Downs JR, de Cani JS. Relation between baseline and on-treatment lipid parameters and first acute major coronary events in the Air Force/Texas Coronary Atherosclerosis Prevention Study (AFCAPS/TexCAPS). *Circulation* 2000;101:477-84.

Gould AL, Rossouw JE, Santanello NC, Heyse JF, Furberg CD. Cholesterol reduction yields clinical benefit: a new look at old data. *Circulation* 1995;91:2274-82.

Gould AL, Rossouw JE, Santanello NC, Heyse JF, Furberg CD. Cholesterol reduction yields clinical benefit: impact of statin trials. *Circulation* 1998;97:946-52.

Government Printing Office, ed. Reducing the health consequences of smoking: 25 years of progress. Washington D.C.: Government Printing Office, 1989:702 pages.

Grady D, Wenger NK, Herrington D, Khan S, Furberg CD, Hunninghake D, Vittinghoff E, Hulley S. Postmenopausal hormone therapy increases risk for thromboembolic disease: the heart and estrogen/progestin replacement study (HERS). *Ann Intern Med* 2000;132:689-96.

Graham IM, Daly LE, Refsum HM, Robinson K, Brattström LE, Ueland PM, Palma-Reis RJ, Boers GHJ, Sheahan RG, Israelsson B, Uiterwaa CS, Meleady R, McMaster D, Verhoef P, Witteman J, Rubba P, Bellet H, Wautrecht JC, deValk HW, Sales Luis AC, Parrot-Rouland FM, Tan KS, Higgins I, Garcon D, Medrano MJ, Candito M, Evans AE, Andria G. Plasma homocysteine as a risk factor for vascular disease. The European Concerted Action Project. *JAMA* 1997;277:1775-81.

Graham NM. Metabolic disorders among HIV-infected patients treated with protease inhibitors: a review. *J Acquir Immune Defic Syndr* 2000;25(suppl 1):S4-11.

Granfone A, Campos H, McNamara JR, Schaefer MM, Lamon-Fava S, Ordovas JM, Schaefer EJ. Effects of estrogen replacement on plasma lipoproteins and apolipoproteins in postmenopausal, dyslipidemic women. *Metabolism* 1992;41:1193-8.

Greenberg BH, Blackwelder WC, Levy RI. Primary type V hyperlipoproteinemia. A descriptive study in 32 families. *Ann Intern Med* 1977;87:526-34.

Greenland P, Abrams J, Aurigemma GP, Bond MG, Clark LT, Criqui MH, Crouse JR III, Friedman L, Fuster V, Herrington DM, Kuller LH, Ridker PM, Roberts WC, Stanford W, Stone N, Swan HJ, Taubert KA, Wexler L. Prevention Conference V: Beyond secondary prevention: identifying the high-risk patient for primary prevention: noninvasive tests of atherosclerotic burden: Writing Group III. *Circulation* 2000;101:E16-22.

Greenwald P, Sherwood K, McDonald SS. Fat, caloric intake, and obesity: lifestyle risk factors for breast cancer. *J Am Diet Assoc* 1997;97(suppl 7):S24-30.

Grimley DM, Prochaska JO, Velicer WF, Prochaska GE. Contraceptive and condom use adoption and maintenance: a stage paradigm approach. *Health Educ Q* 1995;22:20-35.

Groop LC. Insulin resistance: the fundamental trigger of type 2 diabetes. *Diabetes Obes Metab* 1999;1(suppl 1):S1-7.

Group of Physicians of the Newcastle-upon-Tyne Region. Trial of clofibrate in the treatment of ischaemic heart disease: five year study by a group of physicians of the New Castle-upon-Tyne region. *BMJ* 1971;4:767-75.

Grover SA, Abrahamowicz M, Joseph L, Brewer C, Coupal L, Suissa S. The benefits of treating hyperlipidemia to prevent coronary heart disease. *JAMA* 1992;267:816-22.

Grover SA, Coupal L, Paquet S, Zowall H. Cost-effectiveness of 3-hydroxy-3-methylglutaryl-coenzyme A reductase inhibitors in the secondary prevention of cardiovascular disease: forecasting the incremental benefits of preventing coronary and cerebrovascular events. *Arch Intern Med* 1999;159:593-600.

Gruer PJ, Vega JM, Mercuri MF, Dobruska MR, Tobert JA. Concomitant use of cytochrome P-450 3A4 inhibitors and simvastatin. *Am J Cardiol* 1999;84:811-5.

Grundy SM, Ahrens EH Jr., Salen G. Interruption of the enterohepatic circulation of bile acids in apolipoprotein E-3/E-2 pattern. *Metabolism* 1992;41:241-5.

Grundy SM, Barrett-Connor E, Rudel LL, Miettinen T, Spector AA. Workshop on the impact of dietary cholesterol on plasma lipoproteins and atherogenesis. *Arteriosclerosis* 1988;8:95-101.

Grundy SM, Bazzarre T, Cleeman J, D'Agostino RB Sr., Hill M, Houston-Miller N, Kannel WB, Krauss R, Krumholz HM, Lauer RM, Ockene IS, Pasternak RC, Pearson T, Ridker PM, Wood D. Prevention Conference V: Beyond secondary prevention: identifying the high-risk patient for primary prevention: medical office assessment: Writing Group I. *Circulation* 2000;101:E3-11.

Grundy SM, Blackburn G, Higgins M, Lauer R, Perri MG, Ryan D. Physical activity in the prevention and treatment of obesity and its comorbidities: evidence report of independent panel to assess the role of physical activity in the treatment of obesity and its comorbidities. *Med Sci Sports Exerc* 1999a;31:1493-500.

Grundy SM, Cleeman JI, Rifkind BM, Kuller LH. Cholesterol lowering in the elderly population. *Arch Intern Med* 1999b;159:1670-8.

Grundy SM, D'Agostino RD Sr., Mosca L, Burke G, Wilson PWF, Rader D, Cleeman JI, Roccella E, Cutler JA, Friedman L. Cardiovascular Risk Assessment Based on U.S. Cohort Studies: findings from a National Heart, Lung, and Blood Institute workshop. *Circulation* 2001a;104:491-6.

Grundy SM, Denke MA. Dietary influences on serum lipids and lipoproteins. *J Lipid Res* 1990;31:1149-72.

Grundy SM, ed. Cholesterol-lowering trials: a historical perspective. In: Grundy SM, ed. Cholesterol lowering therapy: evaluation of clinical trial evidence. New York: Marcel Dekker Inc., 2000a;1-329.

Grundy SM, Mok HY, Zech L, Berman M. Influence of nicotinic acid on metabolism of cholesterol and triglycerides in man. *J Lipid Res* 1981;22:24-36.

Grundy SM, Mok HY, Zech L, Steinberg D, Berman M. Transport of very low density lipoprotein triglycerides in varying degrees of obesity and hypertriglyceridemia. *J Clin Invest* 1979;63:1274-83.

Grundy SM, Pasternak R, Greenland P, Smith S Jr., Fuster V. Assessment of cardiovascular risk by use of multiple-risk-factor assessment equations: a statement for healthcare professionals from the American Heart Association and the American College of Cardiology. *Circulation* 1999c;100:1481-92.

Grundy SM, Vega GL, McGovern ME. Effects of extended-release niacin on lipoproteins and glycemic control in patients with type 2 diabetes mellitus: results of a randomized, double-blind, placebo-controlled multicenter trial. *JACC* 2001b;37(suppl A):249A.

Grundy SM, Wilhelmsen L, Rose G, Campbell RW, Assmann G. Coronary heart disease in high-risk populations: lessons from Finland. *Eur Heart J* 1990;11:462-71.

Grundy SM. Early detection of high cholesterol levels in young adults[Editorial]. *JAMA* 2000b;284:365-7.

Grundy SM. Primary prevention of coronary heart disease: integrating risk assessment with intervention. *Circulation* 1999b;100:988-98.

Grundy SM. Comparison of monounsaturated fatty acids and carbohydrates for lowering plasma cholesterol. *N Engl J Med* 1986;314:745-8.

Grundy SM. Coronary plaque as a replacement for age as a risk factor in global risk assessment. *Am J Cardiol* 2001;88(2-A):8E-11E.

Grundy SM. George Lyman Duff Memorial Lecture. Multifactorial etiology of hypercholesterolemia. Implications for prevention of coronary heart disease. *Arterioscler Thromb* 1991;11:1619-35.

Grundy SM. Hypertriglyceridemia, atherogenic dyslipidemia, and the metabolic syndrome. *Am J Cardiol* 1998a;81:18B-25B.

Grundy SM. Hypertriglyceridemia, insulin resistance, and the metabolic syndrome. *Am J Cardiol* 1999a;83:25F-29F.

Grundy SM. Management of hyperlipidemia of kidney disease. *Kidney Int* 1990;37:847-53.

Grundy SM. Statin trials and goals of cholesterol-lowering therapy. *Circulation* 1998b;97:1436-9.

Gustafsson I, Hildebrandt P, Seibaek M, Melchior T, Torp-Pedersen C, Kober L, Kaiser-Nielsen P, and the TRACE Study Group. Long-term prognosis of diabetic patients with myocardial infarction: relation to antidiabetic treatment regimen. *Eur Heart J* 2000:21:1937-43.

Guyton JR, Blazing MA, Hagar J, Kashyap ML, Knopp RH, McKenney JM, Nash DT, Nash SD. Extended-release niacin vs. gemfibrozil for the treatment of low levels of high-density lipoprotein cholesterol. Niaspan-Gemfibrozil Study Group. *Arch Intern Med* 2000;160:1177-84.

Guyton JR, Capuzzi DM. Treatment of hyperlipidemia with combined niacin-statin regimens. *Am J Cardiol* 1998;82:82U-84U; discussion 85U-86U.

Guyton JR, Goldberg AC, Kreisberg RA, Sprecker DL, Superko HR, O'Connor CM. Effectiveness of once-nightly dosing of extended release niacin alone and in combination for hypercholesterolemia. *Am J Cardiol* 1998;82:737-43.

Guyton JR. Treatment of type III hyperlipoproteinemia. *Am Heart J* 1999;138:17-8.

Gylling H, Miettinen TA. Lipid lowering during concomitant cholesterol synthesis inhibition and cholesterol and bile acid malabsorption in coronary patients. *Circulation* 1999b;100:I-825.

Gylling H, Miettinen TA. Cholesterol reduction by different plant stanol mixtures and with variable fat intake. *Metabolism* 1999a;48:575-80.

Gylling H, Miettinen TA. Serum cholesterol and cholesterol and lipoprotein metabolism in hypercholesterolaemic NIDDM patients before and during sitostanol ester-margarine treatment. *Diabetol* 1994;37:773-80.

Gylling H, Radhakrishnan R, Miettinen TA. Reduction of serum cholesterol in postmenopausal women with previous myocardial infarction and cholesterol malabsorption induced by dietary sitostanol ester margarine: women and dietary sitostanol. *Circulation* 1997;96:4226-31.

Gylling H, Siimes MA, Miettinen TA. Sitostanol ester margarine in dietary treatment of children with familial hypercholesterolemia. *J Lipid Res* 1995;36:1807-12.

Gylling H. Studies of plant stanol esters in different patient populations. *European Heart Journal* 1999;1(suppl):S109-13.

Gyrd-Hansen D. The relative economics of screening for colorectal cancer, breast cancer and cervical cancer. *Crit Rev Oncol Hematol* 1999;32:133-44.

Haffner SM, Alexander CM, Cook TJ, Boccuzzi SJ, Musliner TA, Pedersen TR, Kjekshus J, Pyörälä K. Reduced coronary events in simvastatin-treated patients with coronary heart disease and diabetes or impaired fasting glucose levels: subgroup analyses from the Scandinavian Simvastatin Survival Study. *Arch Intern Med* 1999a;159:2661-7.

Haffner SM, D'Agostino R Jr., Saad MF, O'Leary DH, Savage PJ, Rewers M, Selby J, Bergman RN, Mykkänen L. Carotid artery atherosclerosis in type 2 diabetic and non-diabetic subjects with and without symptomatic coronary artery disease: The Insulin Resistance Atherosclerosis Study. *Am J Cardiol* 2000;85:1395-400.

Haffner SM, Lehto S, Rönnemaa T, Pyörälä K, Laakso M. Mortality from coronary heart disease in subjects with type 2 diabetes and in nondiabetic subjects with and without prior myocardial infarction. *N Engl J Med* 1998;339:229-34.

Haffner SM, Miettinen H, Gaskill SP, Stern MP. Decreased insulin action and insulin secretion predict the development of impaired glucose tolerance. *Diabetologia* 1996;39:1201-7.

Haffner SM, Mykkänen L, Stern MP, Paidi M, Howard BV. Greater effect of diabetes on LDL size in women than in men. *Diabetes Care* 1994;17:1164-71.

Haffner SM. Epidemiology of insulin resistance and its relation to coronary artery disease. *Am J Cardiol* 1999;84:11J-14J.

Haffner SM. Impaired glucose tolerance: is it relevant for cardiovascular disease? *Diabetologia* 1997;40(suppl 2):S138-40.

Hak AE, Stehouwer CD, Bots ML, Polderman KH, Schalkwijk CG, Westendorp IC, Hofman A, Witteman JC. Associations of c-reactive protein with measures of obesity, insulin resistance, and subclinical atherosclerosis in healthy, middle-aged women. *Arterioscler Thromb Vasc Biol* 1999;19:1986-91.

Hallikainen MA, Uusitupa MI. Effects of 2 low-fat stanol ester-containing margarines on serum cholesterol concentrations as part of a low-fat diet in hypercholesterolemic subjects. *Am J Clin Nutr* 1999;69:403-10.

Hansson L, Zanchetti A, Carruthers SG, Dahlöf B, Elmfeldt D, Julius S, Ménard J, Rahn KH, Wedel H, Westerling S. Effects of intensive blood-pressure lowering and low-dose aspirin in patients with hypertension: principal results of the Hypertension Optimal Treatment (HOT) randomised trial. HOT Study Group. *Lancet* 1998;351:1755-62.

Hanston PD, Horn JR. Drug interactions with HMG CoA reductase inhibitors. *Drug Interactions Newsletter* 1998;103-6.

Hardman AE. Physical activity, obesity and blood lipids. *Int J Obes Relat Metab Disord* 1999;23(suppl 3):S64-71.

Harnick DJ, Cohen JL, Schechter CB, Fuster V, Smith DA. Effects of practice setting on quality of lipid-lowering management in patients with coronary artery disease. *Am J Cardiol* 1998;81:1416-20.

Harris WS, Rothrock DW, Fanning A, Inkeles SB, Goodnight SH, Illingworth DR, Connor W. Fish oils in hypertriglyceridemia: a dose-response study. *Am J Clin Nutr* 1990;51:399-406.

Harris WS. Fish oils and plasma lipid and lipoprotein metabolism in humans: a critical review. J Lipid Res 1989;30:785-807.

Harris WS. n-3 fatty acids and serum lipoproteins: human studies. *Am J Clin Nutr* 1997;65(suppl 5):1645-54.

Harrison RA, Waterbor JW. Understanding meta-analysis in cancer epidemiology: dietary fat and breast cancer. *Cancer Detect Prev* 1999;23:97-106.

Hartz AJ, Rupley DC, Kalkhoff RD, Rimm AA. Relationship of obesity to diabetes: influence of obesity level and body fat distribution. *Prev Med* 1983;12:351-7.

Harvald B, Christiansen T, Pederson KM, Rasmussen K, Strate M, Thygesen K. Cost-benefit in treatment of mild hypertension. *Acta Medica Scandinavia* 1983;686:81-7.

Harvey-Berino J. The efficacy of dietary fat vs. total energy restriction for weight loss. *Obes Res* 1998;6:202-7.

Haskell WL, Alderman EL, Fair JM, Maron DJ, Mackey SF, Superko HR, Williams PT, Johnstone IM, Champagne MA, Krauss RM, Farquhar JW. Effects of intensive multiple risk factor reduction on coronary atherosclerosis and clinical cardiac events in men and women with coronary artery disease: The Stanford Coronary Risk Intervention Project (SCRIP). *Circulation* 1994;89:975-90.

Hatziandreu EI, Koplan JP, Weinstein MC, Caspersen CJ, Warner KE. A cost-effectiveness analysis of exercise as a health promotion activity. *Am J Public Health* 1988;78:1417-21.

Havel RJ. Remnant lipoproteins as therapeutic targets. *Curr Opin Lipidol* 2000;11:615-20.

Havel RJ. Role of triglyceride-rich lipoproteins in progression of atherosclerosis. *Circulation* 1990;81:694-6.

Hay JW, Yu WM, Ashraf T. Pharmacoeconomics of lipid-lowering agents for primary and secondary prevention of coronary artery disease. *Pharmacoeconomics* 1999;15:47-74.

Haynes RB, Montague P, Oliver T, McKibbon KA, Brouwers MC, Kanani R. Interventions for helping patients follow prescription medications (Cochrane Review). In: The Cochrane Library, Issue 4, 1999. Oxford: Update Software.

Haynes RB, Sackett DL, Gibson ES, Taylor DW, Hackett BC, Roberts RS, Johnson AL. Improvement of medication compliance in uncontrolled hypertension. *Lancet* 1976;1:1265-8.

Hazzard WR, Goldstein JL, Schrott MG, Motulsky AG, Bierman EL. 3. Hyperlipidemia in coronary heart disease. Evaluation of lipoprotein phenotypes of 156 genetically defined survivors of myocardial infarction. *J Clin Invest* 1973;52:1569-77.

Heart Outcomes Prevention Evaluation Study Investigators. Effects of an angiotensin-converting-enzyme inhibitor, ramipril, on cardiovascular events in high-risk persons. The Heart Outcomes Prevention Evaluation Study Investigators. *N Engl J Med* 2000a;342:145-53.

Heart Outcomes Prevention Evaluation Study Investigators. Vitamin E supplementation and cardiovascular events in high-risk patients. *N Engl J Med* 2000b;342:154-60.

Hebert PR, Gaziano JM, Chan KS, Hennekens CH. Cholesterol lowering with statin drugs, risk of stroke, and total mortality. An overview of randomized trials. *JAMA* 1997;278:313-21.

Heiberg A. The risk of atherosclerotic vascular disease in subjects with xanthomatosis. *Acta Med Scand* 1975;198(4):249-61.

Heinonen TM, Schrott H, McKenney JM, Sniderman AD, Broyles FE, Zavoral JH, Kivel F, Black DM. Atorvastatin, a new HMG-CoA reductase inhibitor as monotherapy and combined with colestipol. *J Cardiovasc Pharamacol Therapeut* 1996;1:117-22.

Heiss G, Tamir I, Davis CE, Tyroler HA, Rifkind BM, Schonfeld G, Jacobs D, Frantz ID Jr. Lipoprotein-cholesterol distributions in selected North American populations: the lipid research clinics program prevalence study. *Circulation* 1980;61:302-15.

Heitmann BL, Lissner L, Sorensen TI, Bengtsson C. Dietary fat intake and weight gain in women genetically predisposed for obesity. *Am J Clin Nutr* 1995;61:1213-7.

Heller DA, de Faire U, Pedersen NL, Dahlen G, McClearn GE. Genetic and environmental influences on serum lipid levels in twins. *N Engl J Med* 1993;328:1150-6.

Helmrich SP, Ragland DR, Leung RW, Paffenbarger RS Jr. Physical activity and reduced occurrence of non-insulin-dependent diabetes mellitus. *N Engl J Med* 1991;325:147-52.

Hendriks HF, Weststrate JA, van Vliet T, Meijer GW. Spreads enriched with three different levels of vegetable oil sterols and the degree of cholesterol lowering in normocholesterolaemic and mildly hypercholesterolaemic subjects. *Eur J Clin Nutr* 1999;53:319-27.

Henken Y, Shap I, Zuk R, Brickner D, Zuilli I, Neumann L, Shany S. Dietary treatment of hypercholesterolemia: do dietitians do it better? A randomized controlled trial. *Am J Med* 2000;109:549-55.

Hennekens CH, Buring JE, Manson JE, Stampfer M, Rosner B, Cook NR, Belanger C, LaMotte F, Gaziano JM, Ridker PM, Willett W, Peto R. Lack of effect of long-term supplementation with beta-carotene on the incidence of malignant neoplasms and cardiovascular disease. *N Engl J Med* 1996;334:1145-9.

Hennekens CH, Dyken ML, Fuster V. Aspirin as a therapeutic agent in cardiovascular disease: a statement for healthcare professionals from the American Heart Association. *Circulation* 1997;96:2751-3.

Herd JA, Ballantyne CM, Farmer JA, Ferguson JJ, Jones PH, West MS, Gould KL, Gotto AM. Effects of fluvastatin on coronary atherosclerosis in patients with mild to moderate cholesterol elevations (Lipoprotein and Coronary Atherosclerosis Study [LCAS]); *Am J Cardiol* 1997;80:278-86.

Herlitz J, Karlson BW, Edwardsson N, Emanuelsson H, Hjalmarson A. Prognosis in diabetics with chest pain or other symptoms suggestive of acute myocardial infarction. *Cardiology* 1992;80:237-45.

Herlitz J, Karlson BW, Karlsson T, Lindqvist J, and Sjolin M. Predictors of death during 5 years after hospital discharge among patients with a suspected acute coronary syndrome with particular emphasis on whether an infarction was developed. *Int J Cardiol* 1998;66(1):73-80.

Herlitz J, Wognsen GB, Karlson BW, Sjöland H, Karlsson T, Caidahl K, Hartford M, Haglid M. Mortality, mode of death and risk indicators for death during 5 years after coronary artery bypass grafting among patients with and without a history of diabetes mellitus. *Coron Artery Dis* 2000;11:339-46.

Herrington DM, Reboussin DM, Brosnihan KB, Sharp PC, Shumaker SA, Snyder TE, Furberg CD, Kowalchuk GJ, Stuckey TD, Rogers WJ, Givens DH, Waters D. Effects of estrogen replacement on the progression of coronary-artery atherosclerosis. *N Engl J Med* 2000;343:522-9.

Hertzer NR. Fatal myocardial infarction following abdominal aortic aneurysm resection. Three hundred forty-three patients followed 6-11 years postoperatively. *Ann Surg* 1980;192:667-73.

Hirsch J, Hudgins LC, Leibel RL, Rosenbaum M. Diet composition and energy balance in humans. *Am J Clin Nutr* 1998;67(suppl):551S-5S.

Historic income tables—people. Retrieved from http://www.census.gov/hhes/income/histinc/incperdet.html.

Hjermann I, Holme I, Velve Byre K, Leren P. Effect of diet and smoking intervention on the incidence of coronary heart disease: report from the Oslo study group of a randomised trial in healthy men. *Lancet* 1981;2:1303-10.

Hlatky MA, Rogers WJ, Johnstone I, Boothroyd D, Brooks MM, Pitt B, Reeder G, Ryan T, Smith H, Whitlow P, Wiens R, Mark DB. Medical care costs and quality of life after randomization to coronary angioplasty or coronary bypass surgery. Bypass Angioplasty Revascularization Investigation (BARI) Investigators. *N Engl J Med* 1997;336:92-9.

Hobbs HH, Brown MS, Goldstein JL. Molecular genetics of the LDL receptor gene in familial hypercholesterolemia. *Hum Mutat* 1992;1:445-66.

Hobbs HH, Russell DW, Brown MS, Goldstein JL. The LDL receptor locus in familial hypercholesterolemia: mutational analysis of a membrane protein. *Annu Rev Genet* 1990;24:133-70.

Hobson RW 2nd, Weiss DG, Fields WS, Goldstone J, Moore WS, Towne JB, Wright CB. Efficacy of carotid endarterectomy for asymptomatic carotid stenosis. The Veterans Affairs Cooperative Study Group. *N Engl J Med* 1993;328:221-7.

Hodgson TA, Cohen AJ. Medical care expenditures for selected circulatory diseases. *Medical Care* 1999;37:994-1012.

Hodis HN, Mack WJ, Azen SP, Alaupovic P, Pogoda JM, LaBree L, Hemphill LC, Kramsch DM, Blankenhorn DH. Triglyceride- and cholesterol-rich lipoproteins have a differential effect on mild/moderate and severe lesion progression as assessed by quantitative coronary angiography in a controlled trial of lovastatin. *Circulation* 1994;90:42-9.

Hodis HN, Mack WJ, LaBree L, Selzer RH, Liu CR, Liu CH, Azen SP. The role of carotid arterial intima-media thickness in predicting clinical coronary events. *Ann Intern Med* 1998;128:262-9.

Hoerger TJ, Bala MV, Bray JW, Wilcosky TC, LaRosa J. Treatment patterns and distribution of low-density lipoprotein cholesterol levels in treatment-eligible United States adults. *Am J Cardiol* 1998;82:61-5.

Holme I. An analysis of randomized trials evaluating the effect of cholesterol reduction on total mortality and coronary heart disease incidence. *Circulation* 1990;82:1916-24.

Holme I. Relation of coronary heart disease incidence and total mortality to plasma cholesterol reduction in randomised trials: use of meta-analysis. *Br Heart J* 1993;69(suppl 1):S42-S7.

Holme I. Relationship between total mortality and cholesterol reduction as found by meta-regression analysis of randomized cholesterol-lowering trials. *Control Clin Trials* 1996;17:13-22.

Holmes CL, Schulzer M, Mancini GB. Angiographic results of lipid-lowering trials: a systematic review and meta-analysis. In: Grundy SM, ed. Cholesterol-lowering therapy*:* evaluation of clinical trial evidence. New York: Marcel Dekker Inc., 2000;191-220.

Holmes MD, Hunter DJ, Colditz GA, Stampfer MJ, Hankinson SE, Speizer FE, Rosner B, Willett WC. Association of dietary intake of fat and fatty acids with risk of breast cancer. *JAMA* 1999;281:914-20.

Homma Y, Mikami Y, Tamachi H, Nakaya N, Nakamura H, Araki G, Goto Y. Comparison of selectivity of LDL removal by double filtration and dextran-sulfate cellulose column plasmapheresis. *Atherosclerosis* 1986;60:23-7.

Honda T, Kai I, Ohi G: Fat and dietary fiber intake and colon cancer mortality: a chronological comparison between Japan and the United States. *Nutr Cancer* 1999;33:95-99.

Hong MK, Romm PA, Reagan K, Green CE, Rackley CE. Usefulness of the total cholesterol to high-density lipoprotein cholesterol ratio in predicting angiographic coronary artery disease in women. *Am J Cardiol* 1991;68:1646-50.

Hoogwerf BJ, Bantle JP, Kuba K, Frantz ID Jr., Hunninghake DB. Treatment of type III hyperlipoproteinemia with four different treatment regimens. *Atherosclerosis* 1984;51:251-9.

Hoogwerf BJ, Frolkis JP, Pearce GP, Vidt D, Pashkow FJ, Cross JA, Sprecher DL. Use of treatment algorithms by physician extenders in a preventive cardiology clinic for LDL-cholesterol, blood pressure, and HbA1c in diabetic patients. *Circulation* 1999a;100:1-100.

Hoogwerf BJ, Waness A, Cressman M, Canner J, Campeau L, Domanski M, Geller N, Herd A, Hickey A, Hunninghake DB, Knatterud GL, White C. Effects of aggressive cholesterol lowering and low-dose anticoagulation on clinical and angiographic outcomes in patients with diabetes. The Post Coronary Artery Bypass Graft Trial. *Diabetes* 1999b;48:1289-94.

Hopkins PN, Williams RR, Kuida H, Stults BM, Hunt SC, Barlow GK, Ash KO. Family history as an independent risk factor for incident coronary artery disease in a high-risk cohort in Utah. *Am J Cardiol* 1988;62:703-7.

Hopkins PN. Effects of dietary cholesterol on serum cholesterol: a meta-analysis and review. *Am J Clin Nutr* 1992;55:1060-70.

Horwitz RI, Horwitz SM. Adherence to treatment and health outcomes. *Arch Intern Med* 1993;153:1863-8.

Howard BV, Lee ET, Cowan LD, Devereaux RB, Galloway JM, Go OT, Howard WJ, Rhoades ER, Robbins DC, Sievers MC, Welty TK. Rising tide of cardiovascular disease in American Indians. *Circulation* 1999;99:2389-95.

Howard BV, Lee ET, Cowan LD, Fabsitz RR, Howard WJ, Oopik AJ, Robbins DC, Savage PJ, Yeh JL, Welty TK. Coronary heart disease prevalence and its relation to risk factors in Amercian Indians. The Strong Heart Study. *Am J Epidemiol* 1995;142:254-68.

Howell WH, McNamara DJ, Tosca MA, Smith BT, Gaines JA. Plasma lipid and lipoprotein responses to dietary fat and cholesterol: a meta-analysis. *Am J Clin Nutr* 1997;65:1747-64.

Hristova L, Hakama M. Effect of screening for cancer in the Nordic countries on deaths, cost and quality of life up to the year 2017. *Acta Oncologica* 1997;36(suppl 9):S1-60.

Hruz PW, Murata H, Mueckler M. Adverse metabolic consequences of HIV protease inhibitor therapy: the search for a central mechanism. *Am J Physiol Endocrinol Metab* 2001;280:E549-53.

Hsu I, Spinler SA, Johnson NE. Comparative evaluation of the safety and efficacy of HMG-CoA reductase inhibitor monotherapy in the treatment of primary hypercholesterolemia. *Ann Pharmacother* 1995;29:743-59.

Hu FB, Stampfer MJ, Manson JE, Ascherio A, Colditz GA, Speizer FE, Hennekens CH, Willett WC. Dietary saturated fats and their food sources in relation to the risk of coronary heart disease in women. *Am J Clin Nutr* 1999a;70:1001-8b.

Hu FB, Stampfer MJ, Manson JE, Rimm E, Colditz GA, Rosner BA, Hennekens CH, Willett WC. Dietary fat intake and the risk of coronary heart disease in women, *N Engl J Med* 1997;337:1491-9.

Hu FB, Stampfer MJ, Rimm EB, Manson JE, Ascherio A, Colditz GA, Rosner BA, Hennekens CH, Spiegelman D, Speizer FE, Sacks FM, Willett WC. A prospective study of egg consumption and risk of cardiovascular disease in men and women. *JAMA* 1999b;281:1387-94a.

Hu FB, Stampfer MJ, Solomon C, Liu S, Colditz GA, Speizer FE, Willett WC, Manson JE. Physical activity and risk for cardiovascular events in diabetic women. *Ann Intern Med* 2001;134:96-105.

Hu FB, Stampfer MJ, Solomon C, Willett WC, Manson JE. Diabetes mellitus and mortality from all causes and coronary heart disease in women: 20 years of follow-up. *Diabetes* 2000;49(suppl 1):A20.

Hubert HB, Feinleib M, McNamara PM, Castelli WP. Obesity as an independent risk factor for cardiovascular disease: a 26-year follow-up of participants in the Framingham Heart Study. *Circulation* 1983;67:968-77.

Hulley S, Grady S, Bush T, Furberg C, Herrington D, Riggs B, Vittinghoff FE. Randomized trial of estrogen plus progestin for secondary prevention of coronary heart disease in postmenopausal women. *JAMA* 1998;280:605-13.

Hulley SB, Rosenman RH, Bawol RD, Brand RJ. Epidemiology as a guide to clinical decisions: The association between triglyceride and coronary heart disease. *N Engl J Med* 1980;302:1383-9.

Humphries SE, Peacock R, Dunning A, Lane A, Green F, Hamsten A. Identification of genetic variation that determines levels of plasma triglycerides and hypercoagulability. *Clin Genet* 1994;46(1 Spec No):19-31.

Hunninghake DB, Stein EA, Bremner WF, Greenland P, Demke DM, Oliphant TH. Dose-response study of colestipol tablets in patients with moderate hypercholesterolemia. *Am J Therapeut* 1995; 2:180-9.

Hunninghake DB, Stein EA, Dujovne CA, Harris WS, Feldman EB, Miller VT, Tobert JA, Laskarzewski PM, Quiter E, Held J, Taylor AM, Hopper S, Leonard SB, Brewer BK. The efficacy of intensive dietary therapy alone or combined with lovastatin in outpatients with hypercholesterolemia. *N Engl J Med* 1993;328:1213-9.

Hunninghake DB. Drug treatment of dyslipoproteinemia. *Endocrinol Metab Clin North Am* 1990;19:345-60.

Hunt SC, Williams RR, Barlow GK. A comparison of positive family history definitions for defining risk of future disease. *J Chronic Dis* 1986;39:809-21.

Hunter DJ, Spiegelman D, Adami HO, et al: Cohort studies of fat intake and the risk of breast cancer—a pooled analysis. *N Engl J Med* 1996;334:356-61.

Hutchinson RG, Watson RL, Davis CE, Barnes R, Brown S, Romm F, Spencer JM, Tyroler HA, Wu K. Racial Differences in risk factors for atherosclerosis. The ARIC Study. Atherosclerosis Risk in Communities. *Angiology* 1997;48:279-90.

Huttunen JK, Heinonen OP, Manninen V, Koskinen P, Hakulinen T, Teppo L, Mänttäri M, Frick MH. The Helsinki Heart Study: an 8.5-year safety and mortality follow-up. *J Intern Med* 1994;235:31-9.

Huttunen JK, Manninen V, Mänttäri M, Koskinen P, Romo M, Tenkanen L, Heinonen OP, Frick MH. The Helsinki Heart Study: central findings and clinical implications. *Ann Med* 1991;23:155-9.

Hypercholesterolemia in elderly patients: resolving the treatment dilemna. *Ann Intern Med* 1990;112:780-92.

Ibels LS, Alfrey AC, Weil R II. Hyperlipidemia in adult, pediatric and diabetic renal transplant recipients. *Am J Med* 1978;64:634-42.

Iida H, Izumino K, Asaka M, Fujita M, Nishino A, Sasayama S. Effect of probucol on hyperlipidemia in patients with nephrotic syndrome. *Nephron* 1987;47:280-3.

Iliadis EA, Rosenson RS. Long-term safety of pravastatin-gemfibrozil therapy in mixed hyperlipidemia. *Clin Cardiol* 1999;22:25-8.

Illingworth DR, Olsen GD, Cook SF, Sexton GJ, Wendel HA, Connor WE. Ciprofibrate in the therapy of type II hypercholesterolemia. A double-blind trial. *Atherosclerosis* 1982;44:211-21.

Illingworth DR, Stein EA, Mitchel YB, Dujovne CA, Frost PH, Knopp RH, Tun P, Zupkis RV, Greguski RA. Comparative effects of lovastatin and niacin in primary hypercholesterolemia. A prospective trial. *Arch Intern Med* 1994;154:1586-95.

Innerarity TL, Mahley RW, Weisgraber KH, Bersot TP, Krauss RM, Vega GL, Grundy SM, Friedl W, Davignon J, McCarthy BJ. Familial defective apolipoprotein B-100: a mutation of apolipoprotein B that causes hypercholesterolemia. *J Lipid Res* 1990;31:1337-49.

Innerarity TL, Weisgraber KH, Arnold KS, Mahey RW, Krauss RM, Vega GL, Grundy SM. Familial defective apolipoprotein B-100: low density lipoproteins with abnormal receptor binding. *Proc Natl Acad Sci U S A* 1987;84:6919-23.

Insull W Jr., Isaacsohn J, Kwiterovich P, Ra P, Brazg R, Dujovne C, Shan M, Shugrue-Crowley E, Ripa S, Tota R. Efficacy and safety of cerivastatin 0.8 mg in patients with hypercholesterolaemia: the pivotal placebo-controlled clinical trial. Cerivastatin Study Group. *J Int Med Res* 2000;28:47-68.

Insull W Jr., Marquis NR, Tsianco MC. Comparison of the efficacy of questran light, a new formulation of cholestyramine powder, to regular questran in maintaining lowered plasma cholesterol levels. *Am J Cardiol* 1991;67:501-5.

Israeli Society for Prevention of Heart Attacks. *Circulation* 2000;102(1):21-7.

Jacques PF, Selhub J, Bostom AG, Wilson PW, Rosenberg IH. The effect of folic acid fortification on plasma folate and total homocysteine concentrations. *N Engl J Med* 1999;340: 1449-54.

Jeffery RW, Hellerstedt WL, French SA, Baxter JE. A randomized trial of counseling for fat restriction versus calorie restriction in the treatment of obesity. *Int J Obes Relat Metab Disord* 1995;19:132-7.

Jenkins DJ, Kendall CW, Axelsen M, Augustin LS, Vuksan V. Viscous and nonviscous fibres, nonabsorbable and low glycaemic index carbohydrates, blood lipids and coronary heart disease. *Curr Opin Lipidol* 2000a;11:49-56. Review.

Jenkins DJ, Kendall CW, Vidgen E, Mehling CC, Parker T, Seyler H, Faulkner D, Garsetti M, Griffin LC, Agarwal S, Rao AV, Cunnane SC, Ryan MA, Connelly PW, Leiter LA, Vuksan V, Josse R. The effect on serum lipids and oxidized low-density lipoprotein of supplementing self-selected low-fat diets with soluble fiber, soy, and vegetable protein foods. *Metabolism* 2000b;49:67-72.

Jenkins DJ, Wolever TM, Rao AV, Hegele RA, Mitchell SJ, Ransom TP, Boctor DL, Spadafora PJ, Jenkins AL, Mehling C, Relle LK, Connelly PW, Story JA, Furumoto EJ, Cory P, Würsch P. Effect on blood lipids of very high intakes of fiber in diets low in saturated fat and cholesterol. *N Engl J Med* 1993;329:21-6.

Jensen J, Blankenhorn DH, Kornerup V. Coronary disease in familial hypercholesterolemia. *Circulation* 1967;36(1):77-82.

Jensen J, Nilas L, Christiansen C. Cyclic changes in serum cholesterol and lipoproteins following different doses of combined postmenopausal hormone replacement therapy. *Br J Obstet Gynaecol* 1986;93:613-8.

Jensen T, Borch-Johnsen K, Kofoed-Enevoldsen A, Deckert T. Coronary heart disease in young type 1 (insulin dependent) diabetic patients with and without diabetic nephropathy: incidence and risk factors. *Diabetologia* 1987;30:144-8.

JNC VI. The sixth report of the Joint National Committee on prevention, detection, evaluation, and treatment of high blood pressure. *Arch Intern Med* 1997;157:2413-46.

Johannesson M, Agewall S, Hartford M, Hedner T, Fagerberg B. The cost-effectiveness of a cardiovascular multiple-risk-factor intervention programme in treated hypertensive men. *J Int Med* 1995;237:19-26.

Johannesson M, Dahlof B, Lindholm LH, Ekbom T, Hansson L, Oden A, Scherstén B, Wester PO, Jönsson B. The cost-effectiveness of treating hypertension in elderly people—an analysis of the Swedish Trial in Old Patients with Hypertension (STOP Hypertension). *J Int Med* 1993;234:317-23.

Johannesson M, Jönsson B, Kjekshus J, Olsson AG, Pedersen TR, Wedel H. Cost-effectiveness of simvaststain treatment to lower cholesterol levels in patients with coronary heart disease. *N Engl J Med* 1997a;336:332-6.

Johannesson M, Meltzer D, O'Conor RM. Incorporating future costs in medical cost-effectiveness analysis: implications for the cost-effectiveness of the treatment of hypertension. *Med Decis Making* 1997b;17:382-9.

Johannesson M. The cost-effectiveness of hypertension treatment in Sweden: an analysis of the criteria for intervention and the choice of drug treatment. *J Hum Hypertens* 1996;10(suppl 2): S23-6.

Johannesson M. The impact of age on the cost-effectiveness of hypertension treatment: an analysis of randomized drug trials. *Med Decis Making.* 1994;14:236-44.

Joint British recommendations on prevention of coronary heart disease in clinical practice. British Cardiac Society, British Hyperlipidaemia Association, British Hypertension Society, endorsed by the British Diabetic Association. *Heart* 1998;80(suppl 2):S1-S29.

Joint British recommendations on prevention of coronary heart disease in clinical practice: summary. British Cardiac Society, British Hyperlipidaemia Association, British Hypertension Society, British Diabetic Association. *BMJ* 2000;320:705-8.

Joint National Committee on Prevention, Detection, Evaluation, and Treatment of High Blood Pressure. Sixth Report. NIH Pub. No. 98-4080, Bethesda, MD: Public Health Service, National Institutes of Health, National Heart, Lung, and Blood Institute, 1997;70.

Jonas MA, Oates JA, Ockene JK, Hennekens CH. Statement on smoking and cardiovascular disease for health care professionals. *Circulation* 1992;86:1664-9.

Jones P, Kafonek S, Laurora I, Hunninghake D, for the CURVES Investigators. Comparative dose efficacy study of atorvastatin versus simvastatin, pravastatin, lovastatin and fluvastatin in patients with hypercholesterolemia (The CURVES study). *Am J Cardiol* 1998;81:582-7.

Jones TF, Eaton CB. Cost-benefit analysis of walking to prevent coronary heart disease. *Arch Fam Med* 1994;3:703-10.

Jorde LB, Williams RR. Relation between family history of coronary artery disease and coronary risk variables. *Am J Cardiol* 1988;62:708-13.

Judd JT, Baer DJ, Clevidence BA, Muesing RA, Chen SC, Weststrate JA, Meijer GW, Wittes J, Lichtenstein AH, Montserrat VB, Schaefer EJ. Effects of margarine compared with those of butter on blood lipid profiles related to cardiovascular disease risk factors in normolipemic adults fed controlled diets. *Am J Clin Nutr* 1998;68:768-77.

Judd JT, Clevidence BA, Muesing RA, Wittes J, Sunkin ME, Podczasy JJ. Dietary trans fatty acids: effects on plasma lipids and lipoproteins of healthy men and women. *Am J Clin Nutr* 1994;59:861-8.

Jukema JW, Bruschke AV, van Boven AJ, Reiber JH, Bal ET, Zwinderman AH, Jansen H, Boerma GJ, van Rappard FM, Lie KI. Effects of lipid lowering by pravastatin on progression and regression of coronary artery disease in symptomatic men with normal to moderately elevated serum cholesterol levels: The Regression Growth Evaluation Statin Study (REGRESS). *Circulation* 1995;91:2528-40.

Julien P, Vohl MC, Gaudet D, Gagne C, Levesque G, Despres JP, Cadelis F, Brun LD, Nadeau A, Ven Murthy MR. Hyperinsulinemia and abdominal obesity affect the expression of hypertriglyceridemia in heterozygous familial lipoprotein lipase deficiency. *Diabetes* 1997;46:2063-8.

Kagan A, Harris BR, Winkelstein W Jr., Johnson KG, Kato H, Syme SL, Rhoads GG, Gay ML, Nichaman MZ, Hamilton HB, Tillotson J. Epidemiologic studies of coronary heart disease and stroke in Japanese men living in Japan, Hawaii, and California: demographic, physical, dietary and biochemical characteristics. *J Chron Dis* 1974;27:345-64.

Kahn SE, Beard JC, Schwartz MW, Ward WK, Ding HL, Bergman RN, Taborsky GJ Jr., Porte D Jr. Increased beta-cell secretory capacity as mechanism for islet adaption to nicotinic acid-induced insulin resistance. *Diabetes* 1989;38:562-8.

Kane JP, Malloy MJ, Ports TA, Phillips NR, Diehl JC, Havel RJ. Regression of coronary atherosclerosis during treatment of familial hypercholesterolemia with combined drug regimens. *JAMA* 1990;264:3007-12.

Kang SS, Wong PW, Malinow MR. Hyperhomocyst(e)inemia as a risk factor for occlusive vascular disease. *Ann Rev Nutr* 1992;12:279-98.

Kannel WB, Abbott RD, Dannenberg AL: Unrecognized myocardial infarction and hypertension: The Framingham Study. *Am Heart J* 1985a;109(3):581.

Kannel WB, Hjortland MC, McNamara PM, Gordon T. Menopause and risk of cardiovascular disease: The Framingham Study. *Ann Intern Med* 1976;85:447-52.

Kannel WB, McGee DL. Diabetes and cardiovascular disease: The Framingham Study. *JAMA* 1979a;241:2035-8.

Kannel WB, McGee DL. Diabetes and glucose tolerance as risk factors for cardiovascular disease: The Framingham Study. *Diabetes Care* 1979b;2:120-6.

Kannel WB, Neaton JD, Wentworth D, Thomas HE, Stamler J, Hulley SB, Kjelsberg MO. Overall and coronary heart disease mortality rates in relation to major risk factors in 325,348 men screened for the MRFIT. *Am Heart J* 1986;112:825-36.

Kannel WB, Schatzkin A. Sudden death: lessons from subsets in populations studies. *J Am Coll Cardiol* 1985b;5:141B-149B.

Kannel WB. Influence of fibrinogen on cardiovascular disease. *Drugs* 1997;54(suppl 3):32-40.

Kannel WB. Range of serum cholesterol values in the population developing coronary artery disease. *Am J Cardiol* 1995;76:69C-77C.

Karhapaa P, Malkki M, Laakso M. Isolated low HDL cholesterol. An insulin-resistant state. *Diabetes* 1994;43:411-7.

Karlson BW, Wiklund O, Hallgren P, Sjolin M, Lindqvist J, Herlitz J. Ten-year mortality amongst patients with a very small or unconfirmed acute myocardial infarction in relation to clinical history, metabolic screening and signs of myocardial ischaemia. *J Intern Med* 2000;247:449-56.

Karpe F, Boquist S, Tang R, Bond G, de Faire U, Hamsten A. Remnant lipoproteins are related to intima-media thickness of the carotid artery independently of LDL cholesterol and plasma triglycerides. *J Lipid Res* 2001;42:17-21.

Kasiske BL, Umen AJ. Persistent hyperlipidemia in renal transplant patients. *Medicine* 1987;66:309-16.

Kastelein JP, Isaacsohn JL, Ose L, Hunninghake DB, Frohlich J, Davidson MH, Habib R, Dujovne CA, Crouse JR, Liu M, Melino MR, O'Grady L, Mercuri M, Mitchel YB for the Simvastatin Atorvastatin HDL Study Group. Comparison of effects of simvastatin versus atorvastatin on high-density lipoprotein cholesterol and apolipoprotein A-I levels. *Am J Cardiol* 2000;86:221-3.

Katan MB, Grundy SM, Willett WC. Should a low-fat, high-carbohydrate diet be recommended for everyone? Beyond low-fat diets. *N Engl J Med* 1997;337:563-6.

Katan MB, Zock PL, Mensink RP. Trans fatty acids and their effects on lipoproteins in humans. *Ann Rev Nutr* 1995;15:473-93.

Katan MB. Direct and indirect effects of dietary fibre on plasma lipoproteins in man. *Scand J Gastroenterol Suppl* 1987;129:218-22.

Katan MB. Effect of low-fat diets on plasma high-density lipoprotein concentrations. *Am J Clin Nutr* 1998;67(suppl):573S-576S.

Katan MB. High-oil compared with low-fat, high-carbohydrate diets in the prevention of ischemic heart disease. *Am J Clin Nutr* 1997;66(suppl):974S-9S.

Keenan JM, Wenz JB, Myers S, Ripsin C, Huang Z. Randomized controlled cross-over trial of oat bran in hypercholesterolemic subjects. *J Family Practice* 1991;33:600-8.

Kekalainen P, Sarlund H, Pyörälä K, Laakso M. Family history of coronary heart disease is a stronger predictor of coronary heart morbidity and mortality than family history of non-insulin dependent diabetes mellitus. *Atherosclerosis* 1996;123:203-13.

Kekki M, Nikkila EA. Plasma triglyceride metabolism in the adult nephrotic syndrome. *Eur J Clin Invest* 1971;1:345-51.

Kelley MJ, Hoover-Plow J, Nichols-Bernhard JF, Verity LS, Brewer H. Oat bran lowers total and low-density lipoprotein cholesterol but not lipoprotein(a) in exercising adults with borderline hypercholesterolemia. *JADA* 1994;94:1419-21.

Kelly JJ, Lawson JA, Campbell LV, Storlien LH, Jenkins AB, Whitworth JA, O'Sullivan AJ. Effects of nicotinic acid on insulin sensitivity and blood pressure in healthy subjects. *J Hum Hypertens* 2000;14:567-72.

Kerlikowske K, Salzmann P, Phillips KA, Cauley JA, Cummings SR. Continuing screening mammography in women aged 70 to 79 years: impact on life expectancy and cost-effectiveness. *JAMA* 1999;282:2156-63.

Kesaniemi YA, Grundy SM. Dual defect in metabolism of very-low-density lipoprotein triglycerides. Patients with type 5 hyperlipoproteinemia. *JAMA* 1984;251:2542-7.

Keys A, Aravanis C, Blackburn H. Seven countries–a multivariate analysis of death and coronary heart disease. Cambridge, MA: Harvard University Press, 1980;381.

Keys A, Menotti A, Aravanis C, Blackburn H, Djordjevic BS, Buzina R, Dontas AS, Fidanza F, Karvonen MJ, Kimura N, Mohacek I, Nedeljkovic S, Puddu V, Punsar S, Taylor HL, Conti S, Kromhout D, Toshima H. The Seven Countries Study: 2,289 deaths in 15 years. *Prev Med* 1984;13:141-54.

Keys A, Menotti A, Karvonen MJ, Aravanis C, Blackburn H, Buzina R, Djordjevic BS, Dontas AS, Fidanza F, Keys MH, Kromhout D, Nedeljkovic S, Punsar S, Seccareccia F, Toshima H. The diet and 15-year death rate in the seven countries study. *Am J Epedmiol* 1986;124:903-15.

Khaw KT, Barrett-Connor E. Family history of heart attack: a modifiable risk factor? *Circulation* 1986;74:239-44.

King H, Kriska AM. Prevention of type II diabetes by physical training: epidemiological considerations and study methods. *Diabetes Care* 1992;15(suppl 4):1794-9.

King ME, Breslow JL, Lees RS. Plasma-exchange therapy of homozygous familial hypercholesterolemia. *N Engl J Med* 1980;302(26):1457-9.

Kinosian B, Glick H, Preiss L, Puder KL. Cholesterol and coronary heart disease: predicting risks in men by changes in levels and ratios. *J Investig Med* 1995;43:443-50.

Kiortisis DN, Millionis H, Bairaktari E, Elisaf MS. Efficacy of combination of atorvastatin and micronised fenofibrate in the treatment of severe mixed hyperlipidemia. *Eur J Clin Pharmacol* 2000;56:631-5.

Kirkman MS, Weinberger M, Landsman PB, Samsa GP, Shortliffe EA, Simel DL, Feussner JR. A telephone-delivered intervention for patients with NIDDM. *Diabetes Care* 1994;17:840-6.

Kjekshus J, and Pedersen TR for the Scandinavian Simvastatin Survival Study Group. Reducing the risk of coronary events: evidence from the Scandinavian Simvastatin Survival Study (4S). *Am J Cardiol* 1995;76:64C-68C.

Klag MJ, Ford DE, Mead LA, He J, Whelton PK, Liang KY, Levine DM. Serum cholesterol in young men and subsequent cardiovascular disease. *N Engl J Med* 1993;328:313-8.

Klarman HE, Francis JO, Rosenthal JD. Cost-effectiveness analysis applied to the treatment of chronic renal disease. *Medical Care* 1968;6:48-54.

Kliewer EV, Smith KR: Breast cancer mortality among immigrants in Australia and Canada. *J Natl Cancer Inst* 1995;87:1154-61.

Knapp HH, Schrott H, Ma P, Knopp R, Chin B, Gaziano JM, Donovan JM, Burke SK, Davidson MH. Efficacy and safety of combination simvastatin and colesevelam in patients with primary hypercholesterolemia. *Am J Med* 2001;110:352-60.

Knatterud GL, Rosenberg Y, Campeau L, Geller NL, Hunninghake DB, Forman SA, Forrester JS, Gobel FL, Herd JA, Hickey A, Hoogwerf BJ, Terrin ML, White C. Long-term effects on clinical outcomes of aggressive lowering of low-density lipoprotein cholesterol levels and low-dose anticoagulation in the Post Coronary Artery Bypass Graft Trial. *Circulation* 2000;102:157-65.

Knopp RH, Alagona P, Davidson M, Goldberg SD, Kafonek SD, Kashyap M, Sprecher D, Superko HR, Jenkins S, Marcovina S. Equivalent efficacy of a time release form of niacin (Niaspan) given once-a-night versus plain niacin in the management of hyperlipidemia. *Metabolism* 1998;47:1097-104.

Knopp RH, Ginsberg J, Albers JJ, Hoff C, Ogilvie JT, Warnick GR, Burrows E, Retzlaff B, Poole M. Contrasting effects of unmodified and time-release forms of niacin on lipoproteins in hyperlipidemic subjects: clues to mechanism of action of niacin. *Metabolism* 1985;34:642-50.

Knopp RH, Walden CE, Retzlaff BM, McCann BS, Dowdy AA, Albers JJ, Gey GO, Cooper MN. Long-term cholesterol-lowering effects of 4 fat-restricted diets in hypercholesterolemic and combined hyperlipidemic men. The Dietary Alternatives Study. *JAMA* 1997;278:1509-15.

Knopp RH. Drug treatment of lipid disorders. *N Engl J Med* 1999;341:498-511.

Knox EG. Evaluation of a proposed breast cancer screening regimen. *BMJ* 1988;297:650-4.

Knuiman JT, West CE, Katan MB, Hautvast JG. Total cholesterol and high density lipoprotein cholesterol levels in populations differing in fat and carboyhydrate intake. *Arteriosclerosis* 1987;7:612-9.

Kodlin D. A note on the cost-benefit problem in screening for breast cancer. *Methods Inf Med* 1972;11:242-7.

Koenig W, Sund M, Frohlich M, Fischer HG, Lowel H, Doring A, Hutchinson WL, Pepys MB. C-reactive protein, a sensitive marker of inflammation, predicts future risk of coronary heart disease in initially healthy middle-aged men: results from the MONICA (Monitoring Trends and Determinants in Cardiovascular Disease) Augsburg Cohort Study, 1984 to 1992. *Circulation* 1999;99:237-42.

Kokkinos PF, Fernhall B. Physical activity and high density lipoprotein cholesterol levels: what is the relationship? *Sports Med* 1999;28:307-14.

Kolaczynski JW, Caro JF. Insulin resistance: site of the primary defect or how the current and the emerging therapies work. *J Basic Clin Physiol Pharmacol* 1998;9:281-94.

Kolinsky J, Reaven GM, Fuqua JW. Effects of weight reduction on obesity: studies of lipid and carbohydrate metabolism in normal and hyperlipoproteinemic subjects. *J Clin Invest* 1974;53:64-76.

Kolonel LN, Hankin JH, Nomura AM, Chu SY. Dietary fat intake and cancer incidence among five ethnic groups in Hawaii. *Cancer Res* 1981;41:3727-8.

Kolonel LN, Nomura AM, Cooney RV. Dietary fat and prostate cancer: current status. *J Natl Cancer Inst* 1999;91:414-28.

Kolonel LN: Nutrition and prostate cancer. *Cancer Causes and Control* 1996;7:83-94.

Koren E, Corder C, Mueller G, Centurion H, Hallum G, Fesmire J, McConathy WD, Alaupovic P. Triglyceride enriched lipoprotein particles correlate with the severity of coronary artery disease. *Atherosclerosis* 1996;122:105-15.

Korhonen T, Savolainen MJ, Koistinen MJ, Ikaheimo M, Linnaluoto MK, Kervinen K, Kesaniemi YA. Association of lipoprotein cholesterol and triglycerides with the severity of coronary heart disease in men and women. *Atherosclerosis* 1996;127:213-20.

Kornitzer M, Dramaix M, Vandenbroek MD, Everaert L, Gerlinger C. Efficacy and tolerance of 200 mg micronised fenofibrate administered over a six month period in hyperlipidemic patients: an open Belgian multicenter study. *Atherosclerosis* 1994;110:(suppl):S49-S54.

Koskinen P, Mänttäri M, Manninen V, Huttunen JK, Heinonen OP, Frick MH. Coronary heart disease incidence in NIDDM patients in the Helsinki Heart Study. *Diabetes Care* 1992;15:820-5.

Kottke TE, Solberg LI, Brekke ML, Conn SA, Maxwell P, Brekke MJ. A controlled trial to integrate smoking cessation advice into primary care practice: doctors helping smokers, round III. *J Fam Pract* 1992;34:701-8.

Krauss RM, Deckelbaum RJ, Ernst N, Fisher E, Howard BV, Knopp RH, Kotchen T, Lichtenstein AH, McGill HC, Pearson PA, Prewitt TE, Stone NJ, Horn LV, Weinberg R. Dietary guidelines for healthy American adults. A statement for health professionals from the Nutrition Committee, American Heart Association. *Circulation* 1996;94:1795-800.

Krauss RM, Eckel RH, Howard B, Appel LJ, Daniels SR, Deckelbaum RJ, Erdman JW Jr., Kris-Etherton P, Goldberg IJ, Kotchen TA, Lichtenstein AH, Mitch WE, Mullis R, Robinson K, Wylie-Rosett J, St. Jeor S, Suttie J, Tribble DL, Bazzarre TL. AHA Dietary Guidelines: revision 2000: A statement for healthcare professionals from the Nutrition Committee of the American Heart Association. *Circulation* 2000;102:2284-99.

Krauss RM, Lindgren FT, Williams PT, Kelsey SF, Brensike J, Vranizan K, Detre KM, Levy RI. Intermediate-density lipoproteins and progression of coronary artery disease in hypercholesterolemic men. *Lancet* 1987;2:62-6.

Krauss RM. Atherogenicity of triglyceride-rich lipoproteins. *Am J Cardiol* 1998;81:13B-17B.

Krauss RM. Regulation of high density lipoprotein levels. *Med Clin North Am* 1982;66:403-30.

Kreisberg RA. Diabetic dyslipidemia. *Am J Cardiol* 1998 Dec 17;82(12A):67U-73U.

Kris-Etherton PM, Pearson TA, Wan Y, Hargrove RL, Moriarty K, Fishell V, Etherton TD. High-monounsaturated fatty acid diets lower both plasma cholesterol and triacylglycerol concentrations. *Am J Clin Nutr* 1999;70:1009-15.

Kris-Etherton PM, Yu S. Individual fatty acid effects on plasma lipids and lipoproteins: human studies. *Am J Clin Nutr* 1997;65(suppl 5):1628S-44S.

Kristal AR, Abrams BF, Thornquist MD, Disogra L, Croyle RT, Shattuck AL, Henry HJ. Development and validation of a food use checklist for evaluation of community nutrition interventions. *Am J Public Health* 1990;80:1318-22.

Kristal AR, Abrams BF, Thornquist MD, Disogra L, Croyle RT, Shattuck AL, Henry HJ. Development and validation of a food use checklist for evaluation of community nutrition interventions. *Am J Public Health* 1990;80:1318-22.

Kristal AR, White E, Shattuck AL, Curry S, Anderson GL, Fowler A, Urban N. Long-term maintenance of a low-fat diet: durability of fat-related dietary habits in the Women's Health Trial. *J Am Diet Assoc* 1992;92:553-9.

Kristein MM. Economic issues in prevention. *Prev Med* 1977;6:252-64.

Krolewski AS, Kosinksi EJ, Warram JH, Leland OS, Busick EJ, Asmal AC, Rand LI, Christlieb AR, Bradley RF, Kahn CR. Magnitude and determinants of coronary artery disease in juvenile-onset, insulin dependent diabetes mellitus. *Am J Cardiol* 1987;59:750-5.

Kromhout D, Bloemberg BP, Feskens EJ, Hertog MG, Menotti A, Blackburn H. Alcohol, fish, fibre and antioxidant vitamins intake do not explain population differences in coronary heart disease mortality. *Int J Epidemiol* 1996;25:753-9.

Kromhout D, Coulander CDL. Diet, prevalence, and 10-year mortality from coronary heart disease in 871 middle-aged men: the Zutphen Study. *Am J Epidemiol* 1984;119:733-41.

Kromhout D, Menotti A, Bloemberg BP, Aravanis C, Blackburn H, Buzina R, Dontas AS, Fidanza F, Giampaoli S, Jansen A, Karvonen M, Katan M, Nissinen A, Nedeljkovic S, Pekkanen J, Pekkarinen M, Punsar S, Rasanen L, Simic B, Toshima H. Dietary saturated and trans fatty acids and cholesterol and 25-year mortality from coronary heart disease: The Seven Countries Study. *Prev Med* 1995;24:308-15.

Kronmal RA, Cain KC, Ye Z, Omenn GS. Total serum cholesterol levels and mortality risk as a function of age. *Arch Intern Med* 1993;153:1065-73.

Kroon AA, Aengevaeren WR, van der Werf T, Uijen GJ, Reiber JH, Bruschke AV, Stalenhoef AF. LDL-Apheresis Atherosclerosis Regression Study (LAARS). Effect of aggressive versus conventional lipid lowering treatment on coronary atherosclerosis. *Circulation* 1996;93:1826-35.

Kroon UB, Silfverstolpe G, Tengborn L. The effects of transdermal estradiol and oral conjugated estrogens on haemostasis variables. *Thromb Haemost* 1994;71:420-3.

Krumholz HM, Cohen BJ, Tsevat J, Pasternak RC, Weinstein MC. Cost-effectiveness of a smoking cessation program after myocardial infarction. *J Am Coll Cardiol* 1993;22:1697-1702.

Krumholz HM, Seeman TE, Merrill SS, Mendes de Leon CF, Vaccarino V, Silverman DI, Tsukahara R, Ostfeld AM, Berkman LF. Lack of association between cholesterol and coronary heart disease mortality and morbidity and all-cause mortality in persons older than 70 years. *JAMA* 1994;272:135-40.

Kuchinskiene Z, Carlson LA. Composition, concentration, and size of low density lipoproteins and of subfractions of very low density lipoproteins from serum of normal men and women. *J Lipid Res* 1982;23:762-9.

Kuller L, Borhani N, Furberg C, Gardin J, Manolio T, O'Leary D, Psaty B, Robbins J. Prevalence of subclinical atherosclerosis and cardiovascular disease and association with risk factors in the cardiovascular health study. *Am J Epidemiol* 1994;139:1164-79.

Kuller L, Fisher L, McClelland R, Fried L, Cushman M, Jackson S, Manolio T. Differences in prevalence of and risk factors for subclinical vascular disease among black and white participants in the Cardiovascular Health Study. *Arterioscler Thromb Vasc Biol* 1998;18:283-93.

Kumanyika S, Wilson JF, Guilford-Davenport M. Weight-related attitudes and behaviors of African American women. *J Am Diet Assoc* 1993;93:416-22.

Kushi LH, Lew RA, Stare FJ, et al. Diet and 20 year mortality from coronary heart disease. The Ireland-Boston Diet-Heart Study. *N Engl J Med* 1985;312:811-8.

Kwiterovich PO Jr. Young adults with hypercholesterolemia. *Am J Med* 1999;107(2A):40S-2S.

Kwiterovich PO Jr., Coresh J, Smith HH, Bachorik PS, Derby CA, Pearson TA. Comparison of the plasma levels of apolipoproteins B and A-1, and other risk factors in men and women with premature coronary artery disease. *Am J Cardiol* 1992;69:1015-21.

Kwiterovich PO Jr., White S, Forte T, Bachorik PS, Smith H, Sniderman A. Hyperapobetalipoproteinemia in a kindred with familial combined hyperlipidemia and familial hypercholesterolemia. *Arteriosclerosis* 1987;7:211-25.

La Vecchia C, Favero A, Franceschi S. Monounsaturated and other types of fat, and the risk of breast cancer. *Eur J Cancer Prev* 1998;7:461-4.

Laakso M; Lehto S. Epidemiology of risk factors for cardiovascular disease in diabetes and impaired glucose tolerance. *Atherosclerosis* 1998;137(suppl 1):S65-73.

LaBresh KA, Owen P, Alteri C, Reilly S, Albright PS, Hordes AR, Shaftel PA, Noonan TE, Stoukides CA, Kaul AF. Secondary prevention in a cardiology group practice and hospital setting after a heart-care initiative. *Am J Cardiol* 2000;85:23A-9A.

LaCroix AZ, Lang J, Scherr P, Wallace RB, Cornoni-Huntley J, Berkman L, Curb JB, Evans D, Hennekens CH. Smoking and mortality among older men and women in three communities. *N Engl J Med* 1991;324:1619-25.

Lai MS, Yen MF, Kuo HS, Koong SL, Chen TH, Duffy SW. Efficacy of breast-cancer screening for female relatives of breast-cancer-index cases: Taiwan multicentre cancer screening (TAMCAS). *Int J Cancer* 1998;78:21-6.

Lamarche B, Despres JP, Pouliot MC, Prud'homme D, Moorjani S, Lupien PJ, Nadeau A, Tremblay A, Bouchard C. Metabolic heterogeneity associated with high plasma triglyceride or low HDL cholesterol levels in men. *Arterioscler Thromb* 1993;13:33-40.

Lamarche B, Moorjani S, Lupien PJ, Cantin B, Bernard PM, Dagenais GR, Despres JP. Apolipoprotein A-I and B levels and the risk of ischemic heart disease during a five-year follow-up of men in the Quebec cardiovascular study. *Circulation* 1996;94:273-8.

Landsberg L. Insulin resistance and hypertension. *Clin Exp Hypertens* 1999;21:885-94.

Langer T, Levy RI. The effect of nicotinic acid on the turnover of low density lipoproteins in type II hyperlipoproteinemia. In: Gey KF, Carlson RA, eds. Metabolic effects of nicotinic acid and its derivatives. Bern, Germany: Hans Huber Publishers, 1971:641-7.

Lardinois CK, Neuman SL. The effects of antihypertensive agents on serum lipids and lipoproteins. *Arch Intern Med* 1988;148:1280-8.

LaRosa JC, He J, Vupputuri S. Effect of statins on risk of coronary disease: a meta-analysis of randomized controlled trials. *JAMA* 1999;282:2340-6.

LaRosa JC. Triglycerides and coronary risk in women and the elderly. *Arch Intern Med* 1997;157:961-8.

Law MR, Thompson SG, Wald NJ. Assessing possible hazards of reducing serum cholesterol. *BMJ* 1994a;308:373-9.

Law MR, Wald NJ, Thompson SG. By how much and how quickly does reduction in serum cholesterol concentration lower risk of ischaemic heart disease? *BMJ* 1994b;308:367-72.

Law MR, Wald NJ, Wu T, Hackshaw A, Bailey A. Systematic underestimation of association between serum cholesterol concentration and ischaemic heart disease in observational studies: data from the BUPA study. *BMJ* 1994c;308:363-6.

Law MR, Wald NJ. An ecologic study of serum cholesterol and ischaemic heart disease between 1950 and 1990. *Eur J Clin Nutr* 1994;48:305-25.

Law MR. Lowering heart disease risk with cholesterol reduction: evidence from observational studies and clinical trials. *Eur Heart J Suppl* 1999;(suppl 1):S3-S8.

Law MR. Plant sterol and stanol margarines and health. *West J Med* 2000;173:43-7.

Leaf A, Jorgensen MB, Jacobs AK, Cote G, Schoenfeld DA, Scheer J, Weiner BH, Slack JD, Kellet MA, Raizner AE, Weber PC, Mahrer PR, Rossouw JE. Do fish oils prevent restenosis after coronary angioplasty? *Circulation* 1994;90:2248-57.

Leaf DA, Connor WE, Illingworth DR, Bacon SP, Sexton G. The hypolipidemic effects of gemfibrozil in type V hyperlipidemia. A double-blind, crossover study. *JAMA* 1989;262:3154-60.

Leary ET, Wang T, Baker DJ, Cilla DD, Zhong J, Warnick GR, Nakajima K, Havel RJ. Evaluation of an immunoseparation method for quantitative measurement of remnant-like particle-cholesterol in serum and plasma. *Clin Chem* 1998;44:2490-8.

Leibel RL, Hirsch J, Appel BE, Checani GC: Energy intake required to maintain body weight is not affected by wide variation in diet composition. *Am J Clin Nutr* 1992;55:350-5.

Leivo T, Sintonen H, Tuominen R, Hakama M, Pukkala E, Heinonen OP. The cost-effectiveness of nationwide breast carcinoma screening in Finland, 1987–1992. *Cancer* 1999;86:638-46.

Lemieux I, Pascot A, Couillard C, Lamarche B, Tchernof A, Almeras N, Bergeron J, Gaudet D, Tremblay G, Prudhomme D, Nadeau A, Despres JP. Hypertriglyceridemic waist: A marker of the atherogenic metabolic triad (hyperinsulinemia; hyperapolipoprotein B; small, dense LDL) in men? *Circulation* 2000;102:179-84.

Lender D, Arauz-Pacheco C, Adams-Huet B, Raskin P. Essential hypertension is associated with decreased insulin clearance and insulin resistance. *Hypertension* 1997;29(1 Pt 1):111-4.

Leng GC, Fowkes FG, Lee AJ, Dunbar J, Housley E, Ruckley CV. Use of ankle brachial pressure index to predict cardiovascular events and death: a cohort study. *BMJ* 1996; 313:1440-4.

Leon AS, Connett J, Jacobs DR Jr., Rauramaa R. Leisure-time physical activity levels and risk of coronary heart disease and death: the Multiple Risk Factor Intervention Trial. *JAMA* 1987;258:2388-95.

Leren P. The effect of plasma cholesterol lowering diet in male survivors of myocardial infarction. A controlled clinical trial. *Acta Med Scand Suppl* 1966;466:1-92.

Leren TP, Hjermann I, Berg K, Leren P, Foss OP, Viksmoen L. Effects of lovastatin alone and in combination with cholestyramine on serum lipids and apolipoproteins in heterozygotes for familial hypercholesterolemia. *Atherosclerosis* 1988;73:135-41.

Lerner DJ, Kannel WB. Patterns of coronary heart disease morbidity and mortality in the sexes: a 26-year follow-up of the Framingham population. *Am Heart J* 1986;111:383-90.

Levin RJ. Carbohydrates. In: Shils ME, Olson JA, Shine M, Ross AC, eds. Modern nutrition in health and disease;9th edition. Baltimore: Williams and Wilkins, 1999;63-4.

Levine GN, Keaney JF, Vita JA. Cholesterol reduction in cardiovascular disease. Clinical benefits and possible mechanisms. *N Engl J Med* 1995;332:512-21.

Levinson SS, Wagner SG. Measurement of apolipoprotein B-containing lipoproteins for routine clinical laboratory use in cardiovascular disease. *Arch Pathol Lab Med* 1992;116:1350-4.

Lewis SJ, Moyé LA, Sacks FM, Johnstone DE, Timmis G, Mitchell J, Limacher M, Kell S, Glasser JP, Grant J, Davis BR, Pfeffer MA, Braunwald E. Effect of pravastatin on cardiovascular events in older patients with myocardial infarction and cholesterol levels in the average range. Results of the Cholesterol and Recurrent Events (CARE) trial. *Ann Intern Med* 1998a;129:681-9.

Lewis SJ, Sacks FM, Mitchell JS, East C, Glasser S, Kell S, Letterer R, Limacher M, Moye LA, Rouleau JL, Pfeffer MA, Braunwald E. Effect of pravastatin on cardiovascular events in women after myocardial infarction. *J Am Coll Cardiol* 1998b;32:140-6.

Li R, Bensen JT, Hutchinson RG, Province MA, Hertz-Picciotto I, Sprafka JM, Tyroler HA. Family risk score of coronary heart disease (CHD) as a predictor of CHD: the Atherosclerosis Risk in Communities (ARIC) study and the NHLBI family heart study. *Genet Epidemiol* 2000;18:236-50.

Li WW, Dammerman MM, Smith JD, Metzger S, Breslow JL, Leff T. Common genetic variation in the promoter of the human apoCIII gene abolishes regulation by insulin and may contribute to hypertriglyceridemia. *J Clin Invest* 1995;96:2601-5.

Liao Y, Cooper RS, Cao G, Kaufman JS, Long AE, McGee DL. Mortality from coronary heart disease and cardiovascular disease among adult U.S. Hispanics: findings from the National Health Interview Survey (1986 to 1994). *J Am Coll Cardiol* 1997;30:1200-5.

Liao Y, Cooper RS, McGee DL, Mensah GA, Ghali JK. The relative effects of left ventricular hypertrophy, coronary artery disease, and ventricular dysfunction on survival among black adults. *JAMA* 1995;273;1592-7.

Libby P, Schoenbeck U, Mach F, Selwyn AP, Ganz P. Current concepts in cardiovascular pathology: the role of LDL cholesterol in plaque rupture and stabilization. *Am J Med* 1998;104(2A):14S-8S.

Libby P. Molecular bases of the acute coronary syndromes. *Circulation* 1995;91:2844-50.

Lichtenstein AH, Ausman LM, Carrasco W, Jenner JL, Ordovas JM, Schaefer EJ. Hydrogenation impairs the hypolipidemic effect of corn oil in humans. Hydrogenation, trans-fatty acids, and plasma lipids. *Arterioscler Thromb* 1993;13:154-61.

Lichtenstein AH, Ausman LM, Jalbert SM, Schaefer EJ. Effects of different forms of dietary hydrogenated fats on serum lipoprotein cholesterol levels. *N Engl J Med* 1999;340:1933-40.

Lichtlen PR, Hugenholtz PG, Rafflenbeul W, Hecker H, Jost S, Deckers JW. Retardation of angiographic progression of coronary artery disease by nifedipine. Results of the International Nifedipine Trial on Antiatherosclerotic Therapy (INTACT). INTACT Group Investigators. *Lancet* 1990;335:1109-13.

Lin BH, Frazao E, Guthrie J. Away-from-home foods are increasingly important to quality of American diet. Agriculture Information Bulletin no.749. Washington, D.C.: U.S. Department of Agriculture, 1999;26 pages.

Lind L, Berne C, Lithell H. Prevalence of insulin resistance in essential hypertension. *J Hypertens* 1995;13:1457-62.

Lindahl B, Weinehall L, Asplund K, Hallmans G. Screening for impaired glucose tolerance. Results from a population-based study in 21,057 individuals. *Diabetes Care* 1999;22:1988-92.

Lindfors KK, Rosenquist CJ. The cost-effectiveness of mammographic screening strategies. *JAMA* 1995;274:881-4.

Lindholm LH, Johannesson M. Cost-benefit aspects of treatment of hypertension in the elderly. *Blood Pressure Suppl* 1995;3:11-4.

Lipid Research Clinics Investigators. The Lipid Research Clinics Coronary Primary Prevention Trial. Results of 6 years of post-trial follow-up. *Arch Intern Med* 1992;152:1399-1410.

Lipid Research Clinics Program Epidemiology Committee. Plasma lipid distributions in selected North American populations: the Lipid Research Clinics Program Prevalence Study. *Circulation* 1979;60:427-39.

Lipid Research Clinics Program. The Lipid Research Clinics coronary primary prevention trial results, I: Reduction in the incidence of coronary heart disease. *JAMA* 1984a;251:351-64.

Lipid Research Clinics Program. The Lipids Research Clinics coronary primary prevention trial results, II: The relationship of reduction in incidence of coronary heart disease to cholesterol lowering. *JAMA* 1984b;251:365-74.

Lissner L, Heitmann BL. Dietary fat and obesity: evidence from epidemiology. *Eur J Clin Nutr* 1995;49:79-90.

Littenberg B, Garber AM, Sox HC Jr. Screening for hypertension. *Ann Intern Med* 1990;112:192-202.

Lloyd-Jones DM, Larson MG, Beiser A, Levy D. Lifetime risk of developing coronary heart disease. *Lancet* 1999;353:89-92.

Logan AG, Milne BJ, Achber C, Campbell WP, Haynes RB. Work-site treatment of hypertension by specially trained nurses: a controlled trial. *Lancet* 1979;2:1175-8.

Long C, Simpson C, Allott E. Psychological and dietetic counselling combined in the treatment of obesity: a comparative study in a hospital outpatient clinic. *Hum Nutr Appl Nutr* 1983;37:94-102.

Long-Term Intervention with Pravastatin in Ischaemic Disease (LIPID) Study Group. Prevention of cardiovascular events and death with pravastatin in patients with coronary heart disease and a broad range of initial cholesterol levels. *N Engl J Med* 1998;339:1349-57.

Lovastatin Study Group III. A multicenter comparison of lovastatin and cholestyramine therapy for severe primary hypercholesterolemia. *JAMA* 1988;260:359-66.

Luc G, Bard JM, Poulain P, Arveiler D, Evans AE, Cambien F, Fruchart JC, Ducimetiere P. Relationship between low-density lipoprotein size and apolipoprotein A-I-containing particles: the ECTIM Study. *Eur J Clin Invest* 1997:27:242-7.

Ludbrook A. A cost-effectiveness analysis of the treatment of chronic renal failure. *Applied Economics* 1981;13:337-50.

Luria MH. Effects of low-dose niacin on high density lipoprotein cholesterol and total cholesterol/high density lipoprotein cholesterol ratio. *Arch Intern Med* 1988;148:2493-5.

MAAS Investigators. Effect of simvastatin on coronary atheroma: the Multicentre Anti-Atheroma Study (MAAS). *Lancet* 1994;344:633-8.

Mabuchi H, Haba T, Tatami R, Miyamoto S, Sakai Y, Wakasugi T, Watanabe A, Koizumi J, Takeda R. Effects of an inhibitor of 3-hydroxy-3-methylglutaryl coenzyme A reductase on serum lipoproteins and ubiquinone-3-10 levels in patients with familial hypercholesterolemia. *N Engl J Med* 1981;305:478-82.

Mabuchi H, Michishita I, Sakai T, Sakai Y, Watanabe A, Wakasugi T, Takeda R. Treatment of homozygous patients with familial hypercholesterolemia by double-filtration plasmapheresis. *Atherosclerosis* 1986;61:135-40.

Mabuchi H, Sakai T, Sakai Y, Yoshimura A, Watanabe A, Wakasugi T, Koizumi J, Takeda R. Reduction of serum cholesterol in heterozygeous patients with familial hypercholesterolemia. Additive effects of compactin and cholestyramine. *N Engl J Med* 1983;308:609-13.

Mack WJ, Krauss RM, Hodis HN. Lipoprotein subclasses in the Monitored Atherosclerosis Regression Study (MARS). Treatment effects and relation to coronary angiographic progression. *Arterioscler Thromb Vasc Biol* 1996;16:697-704.

MacMahon S, Peto R, Cutler J, Collins R, Sorlie P, Neaton J, Abbott R, Godwin J, Dyer A, Stamler J. Blood pressure, stroke, and coronary heart disease. Part 1. Prolonged differences in blood pressure: prospective observational studies corrected for the regression dilution bias. *Lancet* 1990;335:765-74.

MacMahon SW, Cutler JA, Furberg CD, Payne GH. The effects of drug treatment for hypertension on morbidity and mortality from cardiovascular disease: a review of randomized controlled trials. *Prog Cardiovasc Dis* 1986;29(suppl 1):99-118.

Mahley RW, Rall SC Jr. Type III hyperlipoproteinemia (dysbetalipoproteinemia): the role of apolipoprotein E in normal and abnormal lipoprotein metabolism. In: Scriver CR, Beaudet AL, Sly WS, Valle D., eds. The metabolic and molecular bases of inherited disease;7th edition. New York: McGraw-Hill, 1995;1953-80.

Mahley RW, Weisgraber KH, Innerarity TL, Rall SC Jr. Genetic defects in lipoprotein metabolism. Elevation of atherogenic lipoproteins caused by impaired catabolism. *JAMA* 1991;265:78-83.

Malinow MR, Bostom AG, Krauss RM. Homocyst(e)ine, diet, and cardiovascular diseases: a statement for healthcare professionals from the Nutrition Committee, American Heart Association. *Circulation* 1999;99:178-82.

Mallick NP, Short CD. The nephrotic syndrome and ischaemic heart disease. *Nephron* 1981;27:54-7.

Malloy MJ, Kane JP, Kunitake ST. Complementarity of colestipol, niacin, and lovastatin in treatment of severe familial hypercholesterolemia. *Ann Intern Med* 1987;107:616-23.

Malmberg K, Yusuf S, Gerstein HC, Brown J, Zhao F, Hunt D, Piegas L, Calvin J, Keltai M, Budaj, A for the OASIS Registry Investigators. Impact of diabetes on long-term prognosis in persons with unstable angina and non-Q-wave myocardial infarction. Results of the OASIS (Organization to Assess Strategies for Ischemic Syndromes) Registry. *Circulation* 2000;102: 1014-9.

Maly RC, Abrahamse AF, Hirsh SH, Frank FC, Reuben DB. What influences physician practice behavior? An interview study of physicians who received consultative geriatric assessment recommendations. *Arch Fam Med Dev* 1996;5:448-54.

Mandelblatt J, Freeman H, Winczewski D, Cagney K, Williams S, Towers R, Tang J, Gold K, Lin TH, Kerner J. The costs and effects of cervical and breast cancer screening in a public hospital emergency room. *Amer J Public Health* 1997;87:1182-9.

Manson JE, Colditz GA, Stampfer MJ, Willett WC, Rosner B, Monson RR, Speizer FE, Hennekens CH. A prospective study of obesity and risk of coronary heart disease in women. *N Engl J Med* 1990;322:882-9.

Marais AD, Naoumova RP, Firth JC, Penny C, Neuwirth CK, Thompson GR. Decreased production of low density lipoprotein by atorvastatin after apheresis in homozygous famililial hypercholesterolemia. *J Lipid Res* 1997;38:2071-8.

Marcovina S, Zoppo A, Graziani MS, Vassanelli C, Catapano AL. Evaluation of apolipoproteins A-I and B as markers of angiographically assessed coronary artery disease. *Ric Clin Lab* 1988;18:319-28.

Marcovina SM, Hegele RA, Koschinsky ML. Lipoprotein(a) and coronary heart disease risk. *Curr Cardiol Rep* 1999;1:105-11.

Marcovina SM, Koschinsky ML. Lipoprotein(a) as a risk factor for coronary artery disease. *Am J Cardiol* 1998;82:57U-66U; discussion 85U-86U.

Markides KS, Coreil J. The health of Hispanics in the southwestern United States: an epidemiologic paradox. *Public Health Rep* 1986;101:253-65.

Marks JS, Koplan JP, Hogue CJR, Dalmat ME. A cost-benefit/cost-effectiveness analysis of smoking cessation for pregnant women. *Am J Prev Med* 1990;6:282-9.

Marmot MG, Syme SL, Kagan A, Kato H, Cohen JB, Belsky J. Epidemiologic studies of coronary heart disease and stroke in Japanese men living in Japan, Hawaii and California: prevalence of coronary and hypertensive heart disease and associated risk factors. *Am J Epidemiol* 1975;102:514-25.

Martin-Jadraque R, Tato F, Mostaza JM, Vega GL, Grundy SM. Effectiveness of low-dose crystalline nicotinic acid in men with low high-density lipoprotein cholesterol levels. *Arch Intern Med* 1996;156:1081-8.

Marz W, Wollschlager H, Klein G, Neiss A, Wehling M. Safety of low-density lipoprotein cholesterol reduction with atorvastatin versus simvastatin in a coronary heart disease population (the TARGET TANGIBLE Trial). *Am J Cardiol* 1999;84:7-13.

Masuoka H, Kamei S, Wagayama H, Ozaki M, Kawasaki A, Tanaka T, Kitamura M, Katoh S, Shintani U, Misaki M, Sugawa M, Ito M, Nakano T. Association of remnant-like particle cholesterol with coronary artery disease in patients with normal total cholesterol levels. *Am Heart J* 2000;139:305-10.

Matzkies FK, Bahner U, Teschner M, Hohage H, Heidland A, Schaefer RM. Efficiency of 1-year treatment with fluvastatin in hyperlipidemic patients with nephrotic syndrome. *Am J Nephrol* 1999;19:492-4.

Mayo Asymptomatic Carotid Endarterectomy Study Group. Results of a randomized controlled trial of carotid endarterectomy for asymptomatic carotid stenosis. *Mayo Clin Proc* 1992;67:513-8.

McBride P, Underbakke G, Plane MB, Massoth K, Brown RL, Solberg L, Ellis L, Schrott HG, Smith K, Swanson T, Spencer E, Pfeifer G, Knox A. Improving practice prevention systems in primary care practices. The health education and research trial (HEART). *J Fam Pract* 2000;49:115-25.

McBride PE. The health consequences of smoking. Cardiovascular diseases. *Med Clin North Am* 1992;76:333-53.

McGee DL, Reed DM, Yano K, Kagan A, Tillotson J. Ten-year incidence of coronary heart disease incidence in the Honolulu Heart Program: relationship to nutrient intake. *Am J Epidemiol* 1984;119:667-76.

McGill HC Jr. Introduction to the geographic pathology of atherosclerosis. *Lab Invest* 1968;18:465-7.

McGill HC Jr. Persistent problems in the pathogenesis of atherosclerosis. *Atherosclerosis* 1984;4:443-51.

McGill HC Jr., McMahan CA, and the Pathobiological Determinants of Atherosclerosis in Youth (PDAY) Research Group. Determinants of atherosclerosis in the young. *Am J Cardiol* 1998;82: 30T-6T.

McGill HC Jr., McMahan CA, Malcom GT, Oalmann MC, Strong JP, for the PDAY Research Group. Effects of serum lipoproteins and smoking on atherosclerosis in young men and women. *Arterioscler Thromb Vasc Biol* 1997;17:95-106.

McGill HC Jr., McMahan CA, Zieske AW, Sloop GD, Walcott JV, Troxclair DA, Malcom GT, Tracy RE, Oalmann MC, Strong JP, for the Pathobiological Determinants of Atherosclerosis in Youth (PDAY) Research Group. Associations of coronary heart disease risk factors with the intermediate lesion of atherosclerosis in youth. *Arterioscler Thromb Vasc Biol* 2000;20:1998-2004.

McKenna M, Wolfson S, Kuller L. The ratio of ankle and arm arterial pressure as an independent predictor of mortality. *Atherosclerosis* 1991;87:119-28.

McKenney JM, Proctor JD, Harris S, Chinchili VM. A comparison of the efficacy and toxic effects of sustained- vs immediate-release niacin in hypercholesterolemic patients. *JAMA* 1994;271:672-7.

McKenney JM, Slining JM, Henderson HR, Devins D, Barr M. The effect of clinical pharmacy services on patients with essential hypertension. *Circulation* 1973; 48:1104-11.

McMichael A, Giles G: Cancer in migrants to Australia: extending the descriptive epidemiological data. *Cancer Res* 1988;48:751-6.

McNamara JR, Shah PK, Nakajima K, Cupples LA, Wilson PW, Ordovas JM, Schaefer EJ. Remnant lipoprotein cholesterol and triglyceride reference ranges from the Framingham Heart Study. *Clin Chem* 1998;44:1224-32.

Meade TW. Fibrinogen in ischaemic heart disease. *Eur Heart J* 1995;16(suppl A):31-5.

Meenan RT, Stevens VJ, Hornbrook MC, La Chance PA, Glasgow RE, Hollis JF, Lichtenstein E, Vogt TM. Cost-effectiveness of a hospital-based smoking cessation intervention. *Med Care* 1998;36:670-8.

Meigs JB, D'Agostino RB Sr., Wilson PW, Cupples LA, Nathan DM, Singer DE. Risk variable clustering in the insulin resistance syndrome. The Framingham Offspring Study. *Diabetes* 1997;46:1594-600.

Meigs JB, Mittleman MA, Nathan DM, Tofler GH, Singer DE, Murphy-Sheehy PM, Lipinska I, D'Agostino RB, Wilson PW. Hyperinsulinemia, hyperglycemia, and impaired hemostasis: the Framingham Offspring Study. *JAMA* 2000;283:221-8.

Meigs JB, Nathan DM, Wilson PW, Cupples LA, Singer DE. Metabolic risk factors worsen continuously across the spectrum of nondiabetic glucose tolerance. The Framingham Offspring Study. *Ann Intern Med* 1998;128:524-33.

Meigs JB. Invited commentary: insulin resistance syndrome? Syndrome X? Multiple metabolic syndrome? A syndrome at all? Factor analysis reveals patterns in the fabric of correlated metabolic risk factors. *Am J Epidemiol* 2000;152:908-11.

Mekki N, Christofilis MA, Charbonnier M, Atlan-Gepner C, Defoort C, Juhel C, Borel P, Portugal H, Pauli AM, Vialettes B, Lairon D. Influence of obesity and body fat distribution on postprandial lipemia and triglyceride-rich lipoproteins in adult women. *J Clin Endocrinol Metab* 1999;84:184-91.

Mendall MA, Strachan DP, Butland BK, Ballam L, Morris J, Sweetnam PM, Elwood PC. C-reactive protein: relation to total mortality, cardiovascular mortality and cardiovascular risk factors in men. *Eur Heart J* 2000;21:1584-90.

Mensink RP, Katan MB. Effects of dietary fatty acids on serum lipids and lipoproteins. A meta-analysis of 27 trials. *Arterioscler Thromb* 1992;12:911-9.

Mensink RP, Katan MB. Effects of dietary trans-fatty acids on high-density and low-density lipoprotein cholesterol levels in healthy subjects. *N Engl J Med* 1990;323:439-45.

Mensink RP, Katan MB. Effects of monounsaturated fatty acids versus complex carbohydrates on high-density lipoproteins in healthy men and women. *Lancet* 1987;1:122-5.

Mercuri M, Bond MG, Sirtori CR, Veglia F, Crepaldi G, Feruglio FS, Descovich G, Ricci G, Rubba P, Mancini M, Gallus G, Bianchi G, D'Alo G, Ventura A. Pravastatin reduces carotid intima-media thickness progression in an asymptomatic hypercholesterolemic Mediterranean population: The Carotid Atherosclerosis Italian Ultrasound Study. *Am J Med* 1996;101:627-34.

Meschia M, Bruschi F, Soma M, Amicarelli F, Paoletti R, Crosignani P. Effects of oral and transdermal hormone replacement therapy on lipoprotein(A) and lipids: a randomized controlled trial. *Menopause* 1998;5:157-62.

Miccoli R, Bertolotto A, Navalesi R, Odoguardi L, Boni A, Wessling J, Funke H, Wiebusch H, von Eckardstein A, Assmann G. Compound heterozygosity for a structural apolipoprotein A-I variant, apo A-I (L141RT) Pisa, and an apolipoprotein A-I null allele in patients with absence of HDL cholesterol, corneal opacifications, and coronary heart disease. *Circulation* 1996;94:1622-8.

Miettinen H, Lehto S, Salomaa V, Mahonen M, Nicmela M, Haffner SM, Pyörälä K, Tuomilehto J, for the FINMONICA myocardial infarction register study group. Impact of diabetes on mortality after the first myocardial infarction. *Diabetes Care* 1998;21:69-75.

Miettinen M, Karvonen MJ, Turpeinen O, Elosuo R, Paavilainen E. Effect of cholesterol-lowering diet on mortality form coronary heart-disease and other causes. A twelve-year clinical trial in men and women. *Lancet* 1972;2:835-8.

Miettinen TA, Puska P, Gylling H, Vanhanen H, Vartiainen E. Reduction of serum cholesterol with sitostanol-ester margarine in a mildly hypercholesterolemic population. *N Engl J Med* 1995;333:1308-12.

Miettinen TA, Pyörälä K, Olsson AG, Musliner TA, Cook TJ, Faergeman O, Berg K, Pedersen T, Kjekshus J, for the Scandinavian Simvastatin Survival Study (4S). Cholesterol lowering therapy in women and older persons with myocardial infarction or angina pectoris. *Circulation* 1997;96:4211-8.

Miller BD, Alderman EL, Haskell WL, Fair JM, Krauss RM. Predominance of dense low-density lipoprotein particles predicts angiographic benefit of therapy in the Stanford Coronary Risk Intervention Project. *Circulation* 1996;94:2146-53.

Miller KW, Small DM. Surface-to-core and interparticle equilibrium distributions of triglyceride-rich lipoprotein lipids. *J Biol Chem* 1983;258:13772-84.

Miller M, Aiello D, Pritchard H, Friel G, Zeller K. Apolipoprotein A-I (Zavalla)(Leu159 →Pro): HDL cholesterol deficiency in a kindred associated with premature coronary artery disease. *Arterioscler Thromb Vasc Biol* 1998;18:1242-7.

Miller WR, Hedrick KE, Taylor CA. Addictive behaviors and life problems before and after behavioral treatment of problem drinkers. *Addict Behav* 1983b;8(4):403-12.

Miller WR, Rollnick S. Motivational interviewing: preparing people to change addictive behavior. New York: Guilford Press, 1991;348 pages.

Minnich A, Kessling A, Roy M, Giry C, DeLangavant G, Lavigne J, Lussier-Cacan S, Davignon J. Prevalence of alleles encoding defective lipoprotein lipase in hypertriglyceridemic patients of French Canadian descent. *J Lipid Res* 1995;36:117-24.

Moliterno DJ, Jokinen EV, Miserez AR, Lange RA, Willard JE, Boerwinkle E, Hillis LD, Hobbs HH. No association between plasma lipoprotein(a) concentrations and the presence or absence of coronary atherosclerosis in African Americans. *Arterioscler Thromb Vasc Biol* 1995;15:850-5.

Moliterno DJ, Lange RA, Meidell RS, Willard JE, Leffert CC, Gerard RD, Boerwinkle E, Hobbs HH, Hillis LD. Relation of plasma lipoprotein(a) to infarct artery patency in survivors of myocardial infarction. *Circulation* 1993;88:935-40.

Montalescot G, Collet JP, Choussat R, Thomas D. Fibrinogen as a risk factor for coronary heart disease. *Eur Heart J* 1998;19(suppl H):H11-7.

Morgan JM, Capuzzi DM, Guyton JR, Centor RM, Goldberg R, Robbin DC, DiPette D, Jenkins S, Marcovino S. Treatment effect of niaspan, a controlled-release niacin, in patients with hypercholesterolemia: a placebo-controlled trial. *J Cardiovasc Pharmacol Ther* 1996;1:195-202.

Morganroth J, Levy RI, Fredrickson DS. The biochemical, clinical, and genetic features of type III hyperlipoproteinemia. *Ann Intern Med* 1975;82:158-74.

Morisky DE, Levine DM, Green LW, Shapiro S, Russell RP, Smith CR. Five-year blood pressure control and mortality following health education for hypertensive patients. *Am J Public Health* 1983;73:153-62.

Morris JN, Clayton DG, Everitt MG, Semmence AM, Burgess EH. Exercise in leisure time: coronary attack and death rates. *Br Heart J* 1990;63:325-34.

Morris MC, Manson JE, Rosner B, Buring JE, Willett WC, Hennekens CH. Fish consumption and cardiovascular disease in the Physicians' Health Study: a prospective study. *Am J Epidemiol* 1995;142:166-175.

Morris S. A comparison of economic modeling and clinical trials in the economic evaluation of cholesterol-modifying pharmacotherapy. *Health Econ* 1997;6:589-601.

Morrow DA, Ridker PM. C-reactive protein, inflammation, and coronary risk. *Med Clin North Am* 2000;84:149-61, ix.

Moskowitz M, Fox S. Cost analysis of aggressive breast cancer screening. *Radiology* 1979;130:253-6.

Mostaza JM, Schulz I, Vega GL, Grundy SM. Comparison of pravastatin with crystalline nicotinic acid monotherapy in treatment of combined hyperlipidemia. *Am J Cardiol* 1997;79:1298-301.

Muldoon MF, Manuck SB, Mathews KA. Lowering cholesterol concentrations and mortality: a quantitative review of primary prevention trials. *BMJ* 1990;301:309-14.

Muller JE, Kaufmann PG, Luepker RV, Weisfeldt ML, Deedwania PC, Willerson JT. Mechanisms precipitating acute cardiac events: review and recommendations of an NHLBI workshop. *Circulation* 1997;96:3233-9.

Mullin GE, Greenson JK, Mitchell MC. Fulminant hepatic failure after ingestion of sustained-release nicotinic acid. *Ann Intern Med* 1989;111:253-5.

Muls E, Van Ganse E, Closon MC. Cost-effectiveness of pravastatin in secondary prevention of coronary heart disease: comparison between Belgium and the United States of a projected risk model. *Atherosclerosis* 1998;137(suppl):S111-6.

Multiple Risk Factor Intervention Trial (MRFIT). A national study of primary prevention of coronary heart disease. *JAMA* 1976;235:825-7.

Multiple Risk Factor Intervention Trial Research Group. Multiple Risk Factor Intervention Trial (MRFIT). Risk factor changes and mortality results. *JAMA* 1982;248:1465-77.

Mundinger MO, Kane RL, Lenz ER, Totten AM, Tsai WY, Cleary PD, Friedewald WT, Siu AL, Shelanski ML. Primary care outcomes in patients treated by nurse practitioners or physicians. A randomized trial. *JAMA* 2000;283:59-68.

Munro J, Brazier J, Davey R, Nicholl J. Physical activity for the over-65s: Could it be a cost-effective exercise for the NHS? *J Pub Hlth Med* 1997;19:397-402.

Murdock DK, Murdock AK, Murdock RW, Olsen KJ, Frane AM, Kersten ME, Joyce DM, Gantner SE. Long-term safety and efficacy of combination gemfibrozil and HMG-CoA reductase inhibitors for the treatment for mixed lipid disorders. *Am Heart J* 1999;138:151-5.

Mykkanen L, Kuusisto J, Haffner SM, Laakso M, Austin MA. LDL size and risk of coronary heart disease in older men and women. *Arterioscler Thromb Vasc Biol* 1999;19:2742-8.

Napoli C, Lepore S, Chiariello P, Condorelli M, Chiariello M. Long-term treatment with pravastatin alone and in combination with gemfibrozil in familial type IIB hyperlipoproteinemia or combined hyperlipidemia. *J Cardiovasc Pharmacol Ther* 1997;2:17-26.

National Center for Health Statistics. Total serum cholesterol levels of adults 20–74 years of age: United States, 1976–80. No. 236.*Vital Health Stat 2*; Hyattsville, MD: National Center for Health Statistics, 1986:59 pages.

National Cholesterol Education Program. Recommendations on lipoprotein measurement from the Working Group on Lipoprotein Measurement. NIH Pub. No. 95-3044. Bethesda, MD: National Heart, Lung, and Blood Institute, 1995:186 pages.

National Cholesterol Education Program. Recommendations for improving cholesterol measurement. A Report from the Laboratory Standardization Panel of the National Cholesterol Education Program. NIH Pub. No. 93-2964. Bethesda, MD: National Heart, Lung, and Blood Institute, 1993:65 pages.

National Cholesterol Education Program. Report of the Expert Panel on Population Strategies for Blood Cholesterol Reduction. NIH Pub. No. 90-3046. Bethesda, MD: National Heart, Lung, and Blood Institute, 1990:130 pages.

National Cholesterol Education Program. Second report of the expert panel on detection, evaluation, and treatment of high blood cholesterol in adults. NIH Pub. No. 93-3095. Bethesda, MD: National Heart, Lung, and Blood Institute, 1993:180 pages.

National Cholesterol Education Program. Second report of the expert panel on detection, evaluation, and treatment of high blood cholesterol in adults (Adult Treatment Panel II). *Circulation* 1994;89:1333-445.

National health expenditures amounts, and average annual percent change, by type of expenditure: selected calendar years 1970–2008. Retrieved from http://www.hcfa.gov.

National Institutes of Health. Clinical guidelines on the identification, evaluation, and treatment of overweight and obesity in adults–the evidence report. NIH Pub. No.98-4083. Bethesda, MD: National Heart, Lung and Blood Institute, 1998a:262 pages.

National Institutes of Health. Clinical guidelines on the identification, evaluation, and treatment of overweight and obesity in adults - the evidence report. *Obesity Res* 1998b;6:(suppl 2) 51S-209S.

National Research Council. Diet and health: implications for reducing chronic disease risk. Washington, D.C.: National Academy Press, 1989:7, 171-195, 196-201.

National Research Council. Dietary reference intakes for thiamin, riboflavin, niacin, vitamin B6, folate, vitamin B12, pantothenic acid, biotin, and choline Washington, D.C.: National Academy Press, 2000a:567 pages.

National Research Council. Dietary reference intakes for vitamin C, vitamin E, selenium, and carotenoids. Washington, D.C.: National Academy Press, 2000b:509 pages.

National Research Council. Toxicological effects of methylmercury. Washington, D.C.: National Academy Press, 1999.

Navab M, Hama SY, Anantharamaiah GM, Hassan K, Hough GP, Watson AD, Reddy ST, Sevanian A, Fonarow GC, Fogelman AM. Normal high density lipoprotein inhibits three steps in the formation of mildly oxidized low density lipoprotein: Steps 2 and 3. *J Lipid Res* 2000a;41:1495-508.

Navab M, Hama SY, Cooke CJ, Anantharamaiah GM, Chaddha M, Jin L, Subbanagounder G, Faull, KF, Reddy ST, Miller NE, Fogelman AM. Normal high density lipoprotein inhibits three steps in the formation of mildly oxidized low density lipoprotein: Step 1. *J Lipid Res* 2000b;41:1481-94.

Neaton JD, Kuller LH, Wentworth D, Borhani NO. Total and cardiovascular mortality in relation to cigarette smoking, serum cholesterol concentration, and diastolic blood pressure among black and white males followed up for five years. *Am Heart J* 1984;108:759-69.

Neaton JD, Wentworth D, for the Multiple Risk Factor Intervention Trial (MRFIT) Research Group. Serum cholesterol, blood pressure, cigarette smoking, and death from coronary heart disease. Overall findings and differences by age for 316,099 white men. *Arch Intern Med* 1992;152:56-64.

Nelson LH, Tucker LA. Diet composition related to body fat in a multivariate study of 203 men. *J Am Dietetic Assoc* 1996;96:771-7.

Nessman DG, Carnahan JE, Nugent CA. Increasing compliance: patient-operated hypertension groups. *Arch Intern Med* 1980;140:1427-30.

Nestel PJ, Noakes M, Belling GB, McArthur R, Clifton PM, Abbey M. Plasma cholesterol-lowering potential of edible-oil blends suitable for commercial use. *Am J Clin Nutr* 1992;55:46-50.

Neumann PJ, Stone PW, Chapman RH, Sandberg EA, Bell CM. The quality of reporting in published cost-utility analyses, 1976-1997. *Ann Intern Med* 2000;132:964-872.

Neve BP, Fruchart JC, Staels B. Role of the peroxisome proliferator-activated receptors (PPAR) in atherosclerosis. *Biochem Pharmacol* 2000;60:1245-50.

Newman AB, Siscovick DS, Manolio TA, Polak J, Fried LP, Borhani NO, Wolfson SK. Ankle-arm index as a marker of atherosclerosis in the Cardiovascular Health Study (CHS). *Circulation* 1993;88:837-45.

Ng DS, Vezina C, Wolever TS, Kuksis A, Hegele RA, Connelly PW. Apolipoprotein A-I deficiency. Biochemical and metabolic characteristics. *Arterioscler Thromb Vasc Biol* 1995;15:2157-64.

Nie L, Wang J, Clark LT, Tang A, Vega GL, Grundy SM, Cohen JC. Body mass index and hepatic lipase gene (LIPC) polymorphism jointly influence postheparin plasma hepatic lipase activity. *J Lipid Res* 1998;39:1127-30.

Niinikoski H, Lapinleimu H, Viikari J, Rönnemaa T, Jokinen E, Seppänen R, Terho P, Tuominen J, Välimäki I, Simell O. Growth until three years of age in a prospective randomized trial of a diet with reduced saturated fat and cholesterol. *Pediatrics* 1997;99:687-94.

Nilsson PM, Lind L, Pollare T, Berne C, Lithell H. Differences in insulin sensitivity and risk markers due to gender and age in hypertensives. *J Hum Hypertens* 2000;14:51-6.

Nishino M, Malloy MJ, Naya-Vigne J, Russell J, Kane JP, Redberg RF. Lack of association of lipoprotein(a) levels with coronary calcium deposits in asymptomatic postmenopausal women. *J Am Coll Cardiol* 2000;35:314-20.

Noakes M, Clifton PM. Oil blends containing partially hydrogenated or interesterified fats: differential effects on plasma lipids. *Am J Clin Nutr* 1998;68:242-7.

Nordestgaard BG, Lewis B. Intermediate density lipoprotein levels are strong predictors of the extent of aortic atherosclerosis in the St. Thomas's Hospital rabbit strain. *Atherosclerosis* 1991;87:39-46.

Norris JW, Zhu CZ, Bornstein NM, Chambers BR. Vascular risks of asymptomatic carotid stenosis. *Stroke* 1991;22:1485-90.

Notice to Readers. Publication of Surgeon General's report on physical activity and health. *Morb Mortal Wkly Rep* 1996;45:591-2.

Nygard O, Nordrehaug JE, Refsum H, Ueland PM, Farstad M, Vollset SE. Plasma homocysteine levels and mortality in patients with coronary artery disease. *N Engl J Med* 1997;337:230-6.

O'Driscoll G, Green D, Taylor RR. Simvastatin, an HMG-Coenzyme A reductase inhibitor, improves endothelial function within 1 month. *Circulation* 1997; 95:1126-31.

O'Leary DH, Polak JF, Kronmal RA, Manolio TA, Burke GL, Wolfson SK Jr. Carotid-artery intima and media thickness as a risk factor for myocardial infarction and stroke in older adults. Cardiovascular Health Study Collaborative Research Group. *N Engl J Med* 1999;340:14-22.

O'Malley PG, Taylor AJ, Jackson JL, Doherty TM, Detrano RC. Prognostic value of coronary electron-beam computed tomography for coronary heart disease events in asymptomatic populations. *Am J Cardiol* 2000;85:945-8.

O'Rourke RA, Brundage BH, Froelicher VF, Greenland P, Grundy SM, Hachamovitch R, Pohost GM, Shaw LJ, Weintraub WS, Winters WL Jr. American College of Cardiology/American Heart Association expert consensus document on electron-beam computed tomography for the diagnosis and prognosis of coronary artery disease. *J Am Coll Cardiol* 2000a;36:326-340.

O'Rourke RA, Brundage BH, Froelicher VF, Greenland P, Grundy SM, Hachamovitch R, Pohost GM, Shaw LJ, Weintraub WS, Winters WL Jr., Forrester JS, Douglas PS, Faxon DP, Fisher JD, Gregoratos G, Hochman JS, Hutter AM Jr., Kaul S, Wolk MJ. American College of Cardiology/American Heart Association expert consensus document on electron-beam computed tomography for the diagnosis and prognosis of coronary artery disease. *Circulation* 2000b;102:126-140.

Obarzanek E, Hunsberger SA, Van Horn L, Hartmuller VV, Barton BA, Stevens VJ, Kwiterovich PO, Franklin FA, Kimm SY, Lasser NL, Simons-Morton DG, Lauer RM. Safety of a fat-reduced diet: the Dietary Intervention Study in Children (DISC). *Pediatrics* 1997;100:51-9.

Obarzanek E, Sacks FM, Vollmer WM, Bray GA, Miller ER III, Lin PH, Karanja NM, Most-Windhauser MM, Moore TJ, Swain JF, Bales CW, Proschan MA. Effects on blood lipids of a blood pressure-lowering diet: the Dietary Approaches to Stop Hypertension (DASH) Trial. *Am J Clin Nutr* 2001;74:80-9.

Ockene IS, Hebert JR, Ockene JK, Merriam PA, Hurley TG, Saperia GM. Effect of training and a structured office practice on physician-delivered nutrition counseling: the Worcester Area Trial for Counseling in Hyperlipidemia (WATCH). *Am J Prev Med* 1996;12:252-8.

Ockene IS, Hebert JR, Ockene JK, Saperia GM, Stanek E, Nicolosi R, Merriam PA, Hurley TG. Effect of physician-delivered nutrition counseling training and an office-support program on saturated fat intake, weight, and serum lipid measurements in a hyperlipidemic population. Worcester Area Trial for Counseling in Hyperlipidemia (WATCH). *Arch Intern Med* 1999;159:725-31.

Ockene JK, McBride PE, Sallis JF, Bonollo DP, Ockene IS. Synthesis of lessons learned from cardiopulmonary preventive interventions in healthcare practice settings. *Ann Epidemiol* 1997;7:S32-S45.

Okosun IS, Liao Y, Rotimi CN, Prewitt TE, Cooper RS. Abdominal adiposity and clustering of multiple metabolic syndrome in white, black and hispanic Americans. *Ann Epidemiol* 2000;10:263-70.

Okubo I, Glick H, Frumkin H, Eisenberg JM. Cost-effectiveness analysis of mass screening for breast cancer in Japan. *Cancer* 1991;67:2021-9.

Oldridge NB, Jones NL. Improving patient compliance in cardiac exercise rehabilitation: effects of written agreement and self-monitoring. *J Cardiopulm Rehabil* 1983;3:257-62.

Olefsky J, Reaven GM, Farquhar JW. Effects of weight reduction on obesity. Studies of lipid and carbohydrate metabolism in normal and hyperlipoproteinemic subjects. *J Clin Invest* 1974;53:64-76.

Oliver MF. Serum cholesterol—the knave of hearts and the joker. *Lancet* 1981;2:1090-5.

Omenn GS, Goodman GE, Thornquist MD, Balmes J, Cullen MR, Glass A, Keogh JP, Meyskens FL Jr., Valanis B, Williams JH Jr., Barnhart S, Hammar S. Effects of a combination of beta carotene and vitamin A on lung cancer and cardiovascular disease. *N Engl J Med* 1996;334:1150-5.

Oopik AJ, Dorogy M, Devereux RB, Yeh JL, Okin PM, Lee ET, Cowan L, Fabsitz RR, Howard BV, Welty TK. Major electrocardiographic abnormalities among American Indians aged 45 to 74 years (the Strong Heart Study). *Am J Cardiol* 1996;78:1400-5.

Ornish D, Brown SE, Scherwitz LW, Billings JH, Armstrong WT, Ports TA, McLanahan SM, Kirkeeide RL, Brand RJ, Gould KL. Can lifestyle changes reverse coronary heart disease? The Lifestyle Heart Trial. *Lancet* 1990;336:129-33.

Ornstein SM, Garr DR, Jenkins RG, Rust PF, Arnon A. Computer-generated physician and patient reminders. Tools to improve population adherence to selected preventive services. *J Fam Pract* 1991;32:82-90.

Oster G, Huse DM, Delea TE, Colditz GA. Cost-effectiveness of nicotine gum as an adjunct to physicians' advice against cigarette smoking. *JAMA* 1986;256:1315-8.

Paffenbarger RS Jr., Hyde RT, Wing AL, Lee I-M, Jung DL, Kampert JB. The association of changes in physical-activity level and other lifestyle characteristics with mortality among men. *N Engl J Med* 1993;328:538-45.

Palmer RH. Effects of fibric acid derivatives on biliary lipid composition. *Am J Med* 1987;83(suppl 5B):37-43.

Pan HY, DeVault AR, Swites BJ, Whigan D, Ivashkiv E, Willard DA, Brescia D. Pharmacokinetics and pharmacodynamics of pravastatin alone and with cholestyramine in hypercholesterolemia. *Clin Pharmacol Ther* 1990;48:201-7.

Pankow JS, Folsom AR, Province MA, Rao DC, Eckfeldt J, Heiss G, Shahar E, Wu KK. Family history of coronary heart disease and hemostatic variables in middle-aged adults. Atherosclerosis Risk in Communities Investigators and Family Heart Study Research Group. *Thromb Haemost* 1997;77:87-93.

Pate RR, Pratt M, Blair SN, Haskell WL, Macera CA, Bouchard C, Buchner D, Ettinger W, Heath GW, King AC, Kriska A, Leon AS, Marcus BH, Morris J, Paffenbarger RS Jr., Patrick K, Pollock ML, Rippe JM, Sallis J, Wilmore JH. Physical activity and public health. A recommendation from the Centers for Disease Control and Prevention and the American College of Sports Medicine. *JAMA* 1995;273:402-7.

Pauciullo P, Marotta G, Rubba P, Cortese C, Caruso MG, Gnasso A, Fischetti A, Motti C, Mancini M. Serum lipoproteins, apolipoproteins and very low density lipoprotein subfractions during six-month-fibrate treatment in primary hypertriglyceridaemia. *J Intern Med* 1990;228:425-30.

Pearson DA, Stranova TJ, Thompson JD. Patient and program costs associated with chronic hemodialysis care. *Inquiry* 1976;13:23-8.

Pearson TA, Laurora I, Chu H, Kafonek S. The lipid treatment assessment project (L-TAP). A multicenter survey to evaluate the percentages of dyslipidemic patients receiving lipid-lowering therapy and achieving low-density lipoprotein cholesterol goals. *Arch Intern Med* 2000;160:459-67.

Pearson TA, Stone EJ, Grundy SM, McBride PE, Van Horn L, Tobin BW. Translation of nutritional sciences into medical education: the Nutrition Academic Award Program. *Am J Clin Nutr* 2001;74:164-70.

Pearson TA. The undertreatment of LDL-cholesterol: addressing the challenge. *Int J Cardiol* 2000;74 suppl 1:S23-8.

Pedersen TR, Kjekshus J, Berg K, Olsson AG, Wilhelmsen L, Wedel H, Pyörälä K, Miettinen T, Haghfelt T, Faergeman O, Thorgeirsson G, Jönsson B, Schwartz S. Cholesterol lowering and the uses of healthcare resources. Results of the Scandinavian Simvastatin Survival Study. *Circulation* 1996;93:1796-802.

Pedersen TR, Kjekshus J, Pyörälä K, Olsson AG, Cook TJ, Musliner TA, Tobert JA, Haghfelt T. Effect of simvastatin on ischemic signs and symptoms in the Scandinavian Simvastatin Survival Study (4S). *Am J Cardiol* 1998a;81:333-5.

Pedersen TR, Olsson AG, Faergeman O, Kjekshus J, Wedel H, Berg K, Wilhelmsen L, Haghfelt T, Thorgeirsson G, Pyörälä K, Miettinen T, Christophersen B, Tobert JA, Musliner TA, Cook TJ. Lipoprotein changes and reduction in the incidence of major coronary heart disease events in the Scandinavian Simvastatin Survival Study (4S). *Circulation* 1998b; 97:1453-60.

Peduzzi P, Kamina A, Detre K. Twenty-two-year follow-up in the VA Cooperative Study of Coronary Artery Bypass Surgery for Stable Angina. *Am J Cardiol* 1998;81:1393-9.

Pekkanen J, Linn S, Heiss G, Suchindran CM, Leon A, Rifkind BM, Tyroler HA. Ten-year mortality from cardiovascular disease in relation to cholesterol level among men with and without preexisting cardiovascular disease. *N Engl J Med* 1990;322:1700-7.

Pennisi AJ, Heuser ET, Mickey MR, Lipsey A, Malekzadeh MH, Fine RN. Hyperlipidemia in pediatric hemodialysis and renal transplant patients. *Am J Dis Child* 1976;130:957-61.

Penzak SR, Chuck SK. Hyperlipidemia associated with HIV protease inhibitor use: pathophysiology, prevalence, risk factors and treatment. *Scand J Infect Dis* 2000;32:111-23.

People's Republic of China-United States Cardiovascular and Cardiopulmonary Epidemiology Research Group. An epidemiological study of cardiovascular and cardiopulmonary disease risk factors in four populations in the People's Republic of China. Baseline report from the P.R.C.-U.S.A. Collaborative Study. *Circulation* 1992;85:1083-96.

Perri MG. The maintenance of treatment effects in the long-term management of obesity. *Clin Psychol Sci Prac* 1998;5:526-43.

Perry IJ, Refsum H, Morris RW, Ebrahim SB, Ueland PM, Shaper AG. Prospective study of serum total homocysteine concentration and risk of stroke in middle-aged British men. *Lancet* 1995;346:1395-8.

Perseghin G, Price TB, Petersen KF, Roden M, Cline GW, Gerow K, Rothman DL, Shulman GI. Increased glucose transport-phosphorylation and muscle glycogen synthesis after exercise training in insulin-resistant subjects. *N Engl J Med* 1996;335:1357-62.

Peters JR, Quiter ES, Brekke ML, Admire J, Brekke MJ, Mullis RM, Hunninghake DB. The eating pattern assessment tool: A simple instrument for assessing dietary fat and cholesterol intake. *J Am Diet Assoc* 1994;94:1008-13.

Peterson GM, McLean S, Millingen KS. A randomized trial of strategies to improve patient compliance with anticonvulsant therapy. *Epilepsia* 1984;25:412-7.

Phillips NR, Havel RJ, Kane JP. Levels and interrelationships of serum and lipoprotein cholesterol and triglycerides. Association with adiposity and the consumption of ethanol, tobacco, and beverages containing caffeine. *Arteriosclerosis* 1981;1:13-24.

Phillips NR, Waters D, Havel RJ. Plasma lipoproteins and progression of coronary artery disease evaluated by angiography and clinical events. *Circulation* 1993;88:2762-70.

Phillips RL, Lilienfeld AM, Diamond EL, Kagan A. Frequency of coronary heart disease and cerebrovascular accidents in parents and sons of coronary heart disease index cases and controls. *Am J Epidemiol* 1974;100:87-100.

Pierce LR, Wysowski DK, Gross TP. Myopathy and rhabdomyolysis associated with lovastatin-gemfibrozil combination therapy. *JAMA* 1990;264:71-5.

Pietinen P, Ascherio A, Korhonen P, Hartman AM, Willett WC, Albanes D, Virtamo J. Intake of fatty acids and risk of coronary heart disease in a cohort of Finnish men. The Alpha-Tocopherol, Beta-Carotene Cancer Prevention Study. *Am J of Epidemiol* 1997;145:876-87.

Pineda Torra I, Gervois P, Staels B. Peroxisome proliferator-activated receptor alpha in metabolic disease, inflammation, atherosclerosis and aging. *Curr Opin Lipidol* 1999;10:151-9.

Pitt B, Mancini GBJ, Ellis SG, Rosman HS, Park JS, McGovern ME. Pravastatin limitation of atherosclerosis in the corony arteries (PLAC I): reduction in atherosclerosis progression and clinical events. *J Am Coll Cardiol* 1995;26:1133-9.

Pitt B, Waters D, Brown WV, van Boven AJ, Schwartz L, Title LM, Eisenberg D, Shurzinske L, McCormick LS, for the Atorvastatin Versus Revascularization Treatment Investigators . Aggressive lipid-lowering therapy compared with angioplasty in stable coronary artery disease.. *N Engl J Med* 1999;341:70-6.

Plehn JF, Davis BR, Sacks FM, Rouleau JL, Pfeffer MA, Bernstein V, Cuddy TE, Moye LA, Piller LB, Rutherford J, Simpson LM, Braunwald E. Reduction of stroke incidence after myocardial infarction with pravastatin. The Cholesterol and Recurrent Events (CARE) Study. *Circulation* 1999;99:216-23.

Plump AS, Scott CJ, Breslow JL. Human apolipoprotein A-I gene expression increases high density lipoprotein and suppresses atherosclerosis in apolipoprotein E-deficient mouse. *Proc Natl Acad Sci USA* 1994;91:9607-11.

Pohjola-Sintonen S, Rissanen A, Liskola P, Luomanmaki K. Family history as a risk factor of coronary heart disease in patients under 60 years of age. *Eur Heart J* 1998;19:235-9.

Ponticelli C, Barbi GL, Cantaluppi A, et al. Lipid disorders in renal transplant recipients. *Nephron* 1978;20:189-95.

Post Coronary Artery Bypass Graft Trial Investigators. The effect of aggressive lowering of low-density lipoprotein cholesterol levels and low-dose anticoagulation on obstructive changes in saphenous-vein coronary-artery bypass grafts. *N Engl J Med* 1997;336:153-62.

Postiglione A, Montefusco S, Pauciullo P, Mancini M, Piliego T. Effects of atorvastatin in patients with homozygous familial hypercholesterolemia. *Atherosclerosis* 1999;147:423-4.

Potter JD. Nutrition and colorectal cancer. *Cancer Causes and Control* 1996;7:127-46.

Poulias GE, Doundoulakis N, Prombonas E, Haddad H, Papaioannou K, Lymberiades D, Savopoulos G. Aorto-femoral bypass and determinants of early success and late favourable outcome. Experience with 1,000 consecutive cases. *J Cardiovasc Surg* 1992;33:664-78.

Pravastatin Multicenter Study Group II. Comparative efficacy and safety of pravastatin and cholestyramine alone and combined in persons with hypercholesterolemia. *Arch Intern Med* 1993;153:1321-9.

Prentice RL, Sheppard L. Dietary fat and cancer: consistency of the epidemiologic data, and disease prevention that may follow from a practical reduction in fat consumption. *Cancer Causes and Control* 1990;1:81-97.

Prevention of coronary heart disease in clinical practice. Recommendations of the Second Joint Task Force of European and other Societies on coronary prevention. *Eur Heart J* 1998;19:1434-503.

Prochaska JO, DiClemente CC. Stages of changes in the modification of problem behaviors. In: Hersen M, Eisler RM, Miller PM, eds. Progress in behavior modification. Sycamore: Sycamore Press, 1992;184-214.

Prochaska JO, Velicer WF, Rossi JS, Goldstein MG, Marcus BH, Rakowski W, Fiore C, Harlow LL, Redding CA, Rosenbloom D, Rossi SR. Stages of change and decisional balance for 12 problem behaviors. *Health Psychol* 1994;13:39-46.

Prochaska JO. Why do we behave the way we do? *Can J Cardiol* 1995;(suppl A):20A-5A.

Prosperi C, Sparti A, Schutz Y, Di Vetta V, Milon H, Jéquier E. Ad libitum intake of a high-carbohydrate or high-fat diet in young men: effects on nutrient balances. *Am J Clin Nutr* 1997;66:539-45.

Prosser LA, Stinnett AA, Goldman PA, Williams LW, Hunink MGM, Goldman L, Weinstein MC. Cost-effectiveness of cholesterol-lowering therapies according to selected patient characteristics. *Ann Intern Med* 2000;132:769-79.

Psaty BM, Furberg CD, Kuller LH, Bild DE, Rautaharju PM, Polak F, Bovill E, Gottdiener JS. Traditional risk factors and subclinical disease measures as predictors of first myocardial infarction in older adults. The Cardiovascular Health Study. *Arch Intern Med* 1999;159:1339-47.

Public Health Service. Treating Tobacco Use and Dependence: A Systems Approach. Clinical Practice Guideline. U.S. Department of Health and Human Services, June 2000.

Putnam J, Gerrior S. Trends in the U.S. food supply, 1970-97. In: America's eating habits: changes and consequences. (AIB-750). Washington, D.C.: United States Department of Agriculture, Economic Research Service, 1999;133-60.

Pyörälä K, De Backer G, Graham I, Poole-Wilson P, Wood D. Prevention of coronary heart disease in clinical practice: recommendations of the Task Force of the European Society of Cardiology, European Atherosclerosis Society and European Society of Hypertension. *Atherosclerosis* 1994;110:121-61.

Pyörälä K, Laakso M, Uusitupa M. Diabetes and atherosclerosis: an epidemiologic view. *Diabetes Metab Rev* 1987;3:463-524.

Pyörälä K, Pedersen TR, Kjekshus J, Faergeman O, Olsson AG, Thorgeirsson G. Cholesterol lowering with simvastatin improves prognosis of diabetic patients with coronary heart disease. A subgroup analysis of the Scandinavian Simvastatin Survival Study (4S). *Diabetes Care* 1997;20:614-20.

Quinn TG, Alderman EL, McMillan A, Haskell W, for the SCRIP investigators. Development of new coronary atherosclerotic lesions during a 4-year multifactor risk reduction program: the Stanford Coronary Risk Intervention Project (SCRIP). *J Am Coll Cardiol* 1994;24:900-8.

Raal FJ, Pappu AS, Illingworth DR, Pilcher GJ, Marais AD, Firth JC, Kotze MJ, Heinonen TM, Black DM. Inhibition of cholesterol synthesis by atorvastatin in homozygous familial hypercholesterolaemia. *Atherosclerosis* 2000;150:421-8.

Raal FJ, Pilcher G, Rubinsztein DC, Lingenhel A, Utermann G. Statin therapy in a kindred with both apolipoprotein B and low density lipoprotein receptor gene defects. *Atherosclerosis* 1997;129:97-102.

Rabelink AJ, Erkelens DW, Hene RJ, Joles JA, Koomans HA. Effects of simvastatin and cholestyramine on lipoprotein profile in hyperlipidaemia of nephrotic syndrome. *Lancet* 1988;2:1335-8.

Rader DJ, Hoeg JM, Brewer HB Jr. Quantitation of plasma apolipoproteins in the primary and secondary prevention of coronary artery disease. *Ann Intern Med* 1994;120:1012-25.

Rader DJ, Rosas S. Management of selected lipid abnormalities. Hypertriglyceridemia, low HDL cholesterol, lipoprotein(a), in thyroid and renal diseases, and post-transplantation. *Med Clin North Am* 2000;84:43-61.

Rader JI, Calvert RJ, Hathcock JN. Hepatic toxicity of unmodified and time-release preparations of niacin. *Am J Med* 1992;92:77-81.

Raggi P, Callister TQ, Cooil B, He ZX, Lippolis NJ, Russo DJ, Zelinger A, Mahmarian JJ. Identification of patients at increased risk of first unheralded acute myocardial infarction by electron-beam computed tomography. *Circulation* 2000;101:850-5.

Rainwater DL. Lipoprotein correlates of LDL particle size. *Atherosclerosis* 2000;148:151-8.

Randomised trial of endarterectomy for recently symptomatic carotid stenosis: final results of the MRC European Carotid Surgery Trial (ECST). *Lancet* 1998;351:1379-87.

Ravnskov U. Cholesterol lowering trials in coronary heart disease: frequency of citation and outcome. *BMJ* 1992;305:15-9.

Raynor DK, Booth TG, Blenkinsopp A. Effects of computer generated reminder charts on patients' compliance with drug regimens. *BMJ* 1993;306:1158-61.

Reardon MF, Nestel PJ, Craig IH, Harper RW. Lipoprotein predictors of the severity of coronary artery disease in men and women. *Circulation* 1985;71:881-8.

Reaven GM. Pathophysiology of insulin resistance in human disease. *Physiol Rev* 1995;75:473-86.

Refsum H, Ueland PM, Nygard O, Vollset SE. Homocysteine and cardiovascular disease. *Annu Rev Med* 1998;49:31-62.

Reinhart RA, Gani K, Arndt MR, Broste SK. Apolipoproteins A-I and B as predictors of angiographically defined coronary artery disease. *Arch Intern Med* 1990;150:1629-33.

Reisin E, Frohlich ED, Messerli FH, Dreslinski GR, Dunn FG, Jones MM, Batson HM. Cardiovascular changes after weight reduction in obesity hypertension. *Ann Intern Med* 1983:98:315-9.

Renaud S, de Lorgeril M, Delaye J, Guidollet J, Jacquard F, Mamelle N, Martin JL, Monjaud I, Salen P, Toubol P. Cretan Mediterranean diet for prevention of coronary heart disease. *Am J Clin Nutr* 1995;61(suppl):1360S-7S.

Report of the Committee of Principal Investigators. W.H.O. cooperative trial on primary prevention of ischaemic heart disease using clofibrate to lower serum cholesterol: mortality follow-up. *Lancet* 1980;2:379-85.

Report of the Committee of Principal Investigators. W.H.O. cooperative trial on primary prevention of ischaemic heart disease using clofibrate to lower serum cholesterol: final mortality follow-up. *Lancet* 1984;2:600-4.

Report of the National Cholesterol Education Program Expert Panel on Detection, Evaluation, and Treatment of High Blood Cholesterol in Adults. The Expert Panel. *Arch Intern Med* 1988;148:36-69.

Research Committee of the Scottish Society of Physicians. Ischaemic heart disease: a secondary prevention trial using clofibrate. *BMJ* 1971;4:775-84.

Research Committee to the Medical Research Council. Controlled trial of soya-bean oil in myocardial infarction. *Lancet* 1968;2:693-700.

Research Committee. Low-fat diet in myocardial infarction. A controlled trial. *Lancet* 1965;2:501-4.

Retzlaff BM, Dowdy AA, Walden CE, Bovbjerg VE, Knopp RH. The northwest lipid research clinic fat intake scale: Validation and utility. *Am J Public Health* 1997;87:181-5.

Retzlaff BM, Dowdy AA, Walden CE, Bovbjerg VE, Knopp RH. The northwest lipid research clinic fat intake scale: Validation and utility. *Am J Public Health* 1997;87:181-5.

Rice DP, Hodgson TA, Kopstein AN. The economic costs of illness: a replication and update. *Health Care Financ Rev* 1985;7:61-80.

Richard P, Nilsson BY, Rosenqvist U. The effect of long-term intensified insulin treatment on the development of microvascular complications of diabetes mellitus. *N Engl J Med* 1993;329:304-9.

Ridker PM, Buring JE, Shih J, Matias M, Hennekens CH. Prospective study of C-reactive protein and the risk of future cardiovascular events among apparently healthy women. *Circulation* 1998a;98:731-3.

Ridker PM, Glynn RJ, Hennekens CH. C-reactive protein adds to the predictive value of total and HDL cholesterol in determining risk of first myocardial infarction. *Circulation* 1998b;97:2007-11.

Ridker PM, Hennekens CH, Buring JE, Rifai N. C-reactive protein and other markers of inflammation in the prediction of cardiovascular disease in women. *N Engl J Med* 2000;342:836-43.

Ridker PM, Rifai N, Pfeffer MA, Sacks F, Braunwald E. Long-term effects of pravastatin on plasma concentration of C-reactive protein. The Cholesterol and Recurrent Events (CARE) Investigators. *Circulation* 1999;100:230-5.

Rimm EB, Klatsky A, Grobbee D, Stampfer MJ. Review of moderate alcohol consumption and reduced risk of coronary heart disease: is the effect due to beer, wine or spirits? *BMJ* 1996;23:731-6b.

Rimm EB, Stampfer MJ. Antioxidants for vascular disease. *Med Clin North Am* 2000;84:239-49.

Rimm EB, Williams P, Fosher K, Criqui M, Stampfer MJ. Moderate alcohol intake and lower risk of coronary heart disease: meta-analysis of effects on lipids and haemostatic factors. *BMJ* 1999;319:1523-8.

Rissanen AM, Nikkila EA. Coronary artery disease and its risk factors in families of young men with angina pectoris and in controls. *Br Heart J* 1977;39:875-83.

Rissanen AM. Familial aggregation of coronary heart disease in a high incidence area (North Karelia, Finland). *Br Heart J* 1979;42:294-303.

Rissanen T, Voutilainen S, Nyyssonen K, Lakka TA, Salonen JR. Fish oil-derived fatty acids, docosahexaenoic acid and docosapentaenoic acid, and the risk of acute coronary events: the Kuopio ischaemic heart disease risk factor study. *Circulation 2000*;102:2677-9.

Roberts SD, Maxwell DR, Gross TL. Cost-effective care of end-stage renal disease: A billion dollar question. *Ann Intern Med* 1980;92:243-8.

Robinson JG, Conroy C, Wickemeyer WJ. A novel telephone-based system for management of secondary prevention to a low-density lipoprotein cholesterol < or =100 mg/dL. *Am J Cardiol* 2000;85:305-8.

Roche HM, Gibney MJ. Effects of long-chain n-3 polyunsaturated fatty acids on fasting and postprandial triacylglycerol metabolism. *Am J Clin Nutr* 2000;71:232S-7S.

Rodes J, Cote G, Lesperance J, Bourassa MG, Doucet MG, Doucet S, Bilodeau L, Bertrand OF, Harel F, Gallo R, Tardif JC. Prevention of restenosis after angioplasty in small coronary arteries with probucol. *Circulation* 1998;97:429-36.

Rodgers A, MacMahon S. Blood pressure and the global burden of cardiovascular disease. *Clin Exp Hypertens* 1999;21:543-52.

Romling R, von Eckardstein A, Funke H, Motti C, Fragiacomo GC, Noseda G, Assmann G. A nonsense mutation in the apolipoprotein A-I gene is associated with high-density lipoprotein deficiency and periorbital xanthelasmas. *Arterioscler Thromb* 1994;14:1915-22.

Rosamond WD, Chambless LE, Folsom AR, Cooper LS, Conwill DE, Clegg L, Wang CH, Heiss G. Trends in the incidence of myocardial infarction and in mortality due to coronary heart disease, 1987 to 1994. *N Engl J Med* 1998;339:861-7.

Rose 1964 (Dr. Grundy to provide)

Rose DP. Dietary fatty acids and cancer. *Am J Clin Nutr* 1997;66(suppl 4):998S-1003S.

Rose G, Hamilton PJ, Colwell L, Shipley MJ. A randomised controlled trial of anti-smoking advice: 10-year results. *J Epidemiol Community Health* 1982;36:102-8.

Rosenberg L, Hennekens CH, Rosner B, Belanger C, Rothman KJ, Speizer FE. Early menopause and the risk of myocardial infarction. *Am J Obstet Gynecol* 1981;139:47-51.

Rosenquist CJ, Lindfors KK. Screening mammography in women aged 40-49 years: analysis of cost-effectiveness. *Radiology* 1994;191:647-50.

Rosenson RS, Frauenheim WA. Safety of combined pravastatin-gemfibrozil therapy. *Am J Cardiol* 1994;74:499-500.

Rossouw JE, Clinical trials of lipid-lowering drugs. In: Rifkind BM, ed. Drug treatment of hyperlipidemia. New York: Marcel Dekker, Inc., 1991;67-88.

Rossouw JE, Lewis B, Rifkind BM. The value of lowering cholesterol after myocardial infarction. *N Engl J Med* 1990;323:1112-9.

Rossouw JE. The effects of lowering serum cholesterol on coronary heart disease risk. *Med Clin North Am* 1994;78:181-95.

Rossouw JE. What we still need to learn about hormone replacement therapy. *Infert Reprod Med Clin North Am* 1999;10:189-209.

Rowland ML, Fulwood R. Coronary Heart Disease Risk Factor Trends in African Americans Between the First and Second National Health and Nutrition Examination Surveys, United States, 1971-1980. *Am Heart J* 1984;108:771-9.

Rubin EM, Krauss RM, Spangler EA, Verstuyft JG, Clift SM. Inhibition of early atherogenesis in transgenic mice by human apolipoprotein AI. *Nature* 1991;353:265-7.

Rubins HB, Robins SJ, Collins D, Fye CL, Anderson JW, Elam MB, Faas FH, Linares E, Schaefer EJ, Schectman G, Wilt TJ, Wittes J. Gemfibrozil for the secondary prevention of coronary heart disease in men with low levels of high-density lipoprotein cholesterol. Veterans Affairs High-Density Lipoprotein Cholesterol Intervention Trial Study Group. *N Engl J Med* 1999;341:410-8.

Rudel LL, Parks JS, Sawyer JK. Compared with dietary monounsaturated and saturated fat, polyunsaturated fat protects African green monkeys from coronary artery atherosclerosis. *Arterioscler Thromb Vasc Biol* 1995;15:2101-10.

Rudling MJ, Reihner E, Einarsson K, Ewerth S, Angelin B. Low density lipoprotein receptor-binding activity in human tissues: quantitative importance of hepatic receptors and evidence for regulation of their expression in vivo. *Proc Natl Acad USA* 1990;87:3469-73.

Runyan JW Jr. The Memphis chronic disease program. Comparisons in outcome and the nurse's extended role. *JAMA* 1975;231:264-7.

Ryder RE, Hayes TM, Mulligan IP, Kingswood JC, Williams S, Owens DR. How soon after myocardial infarction should plasma lipid values be assessed? *BMJ* 1984;289:1651-3.

Sackett DL, Haynes RB, Givson ES, Hackett BC, Taylor DW, Roberts RS, Johnson AL. Randomised clinical trial of strategies for improving medication compliance in primary hypertension. *Lancet* 1975;1:1205-7.

Sacks FM, Alaupovic P, Moyé LA, Cole TG, Sussex B, Stampfer MJ, Pfeffer MA, Braunwald E. VLDL, apolipoproteins B, CIII, and E, and risk of recurrent coronary events in the Cholesterol and Recurrent Events (CARE) trial. *Circulation* 2000a;102:1886-92.

Sacks FM, Moyé LA, Davis BR, Cole TG, Rouleau JL, Nash DT, Pfeffer MA, and Braunwald E. Relationship between plasma LDL concentrations during treatment with pravastatin and recurrent coronary events in the Cholesterol and Recurrent Events trial. *Circulation* 1998;97:1446-52.

Sacks FM, Pasternak RC, Gibson CM, Rosner B, Stone PH. Harvard Atherosclerosis Reversibility Project (HARP) Group. Effect on coronary atherosclerosis of decrease in plasma cholesterol concentrations in normocholesterolemic patients.. *Lancet* 1994;344:1182-6.

Sacks FM, Pfeffer MA, Moyé LA, Rouleau JL, Rutherford JD, Cole TG, Brown L, Warnica JW, Arnold JMO, Wun C-C, Davis BR, Braunwald E, for the Cholesterol and Recurrent Events Trial Investigators. The effect of pravastatin on coronary events after myocardial infarction in patients with average cholesterol levels. *N Engl J Med* 1996;335:1001-9.

Sacks FM, Stone PH, Gibson CM, Silverman DI, Rosner B, Pasternak RC. Controlled trial of fish oil for regression of human coronary atherosclerosis. *J Am Coll Cardiol* 1995;25:1492-8.

Sacks FM, Svetkey LP, Vollmer WM, Appel LJ, Bray GA, Harsha D, Obarzanek E, Conlin PR, Miller ER, Simons-Morton DG, Karanja N, Lin P-H, Aickin M, Most-Windhauser MM, Moore TJ, Proschan MA, Cutler JA. Effects on blood pressure of reduced dietary sodium and the Dietary Approaches to Stop Hypertension (DASH) diet. *N Engl J Med* 2001;344:3-10.

Sacks FM, Tonkin AM, Shepherd J, Braunwald E, Cobbe S, Hawkins CM, Keech A, Packard C, Simes J, Byington R, Furberg CD. Effect of pravastatin on coronary disease events in subgroups defined by coronary risk factors. The prospective pravastatin pooling project. *Circulation* 2000b;102:1893-900.

Saldanha LF, Hurst KS, Amend WJ, Lazarus JM, Lowrie EG, Ingelfinger J, Grupe W, Levey R. Hyperlipidemia after renal transplantation in children. *Am J Dis Child* 1976:130(9):951-3.

Salenius JP. The course of atherosclerotic diseases after carotid endarterectomy in 279 patients followed-up for 21 years. *J Intern Med* 1989;225:373-8.

Salonen JT, Salonen R. Ultrasonographically assessed carotid morphology and the risk of coronary heart disease. *Arterioscler Thromb* 1991;11:1245-9.

Salonen R, Nyyssönen K, Porkkala E, Rummukainen J, Belder R, Park JS, Salonen JT. Kuopio Atherosclerosis Prevention Study (KAPS). A population-based primary preventive trial of the effect of LDL lowering on atherosclerotic progression in carotid and femoral arteries. *Circulation* 1995;92:1758-64.

Saltzman E, Dallal GE, Roberts SB. Effect of high-fat and low-fat diets on voluntary energy intake and substrate oxidation: studies in identical twins consuming diets matched for energy density, fiber, and palatability. *Am J Clin Nutr* 1997;66:1332-9.

Salzmann P, Kerlikowske K, Phillips K. Cost-effectiveness of extending screening mammography guidelines to include women 40 to 49 years of age. *Ann Intern Med* 1997;127:955-65.

Sandvik L, Erikssen J, Thaulow E, Erikssen G, Mundal R, Rodahl K. Physical fitness as a predictor of mortality among healthy, middle-aged Norwegian men. *N Engl J Med* 1993;328:533-7.

Santamarina-Fojo S. The familial chylomicronemia syndrome. *Endocrinol Metab Clin North Am* 1998;27:551-67.

Savage PJ, Pressel SL, Curb JD, Schron EB, Applegate WB, Black HR, Cohen J, Davis BR, Frost P, Smith W, Gonzalez N, Guthrie GP, Oberman A, Rutan G, Probstfield JL, Stamler J. Influence of long-term, low-dose, diuretic-based, antihypertensive therapy on glucose, lipid, uric acid, and potassium levels in older men and women with isolated systolic hypertension: The Systolic Hypertension in the Elderly Program SHEP Cooperative Research Group. *Arch Intern Med* 1998;158:741-51.

Scandinavian Simvastatin Survival Study Group. Baseline serum cholesterol and treatment effect in the Scandinavian Simvastatin Survival Study (4S). *Lancet* 1995;345:1274-5.

Scandinavian Simvastatin Survival Study Group. Randomised trial of cholesterol lowering in 4,444 patients with coronary heart disease: the Scandinavian Simvastatin Survival Study (4S). *Lancet* 1994;344:1383-9.

Scarabin PY, Alhenc-Gelas M, Plu-Bureau G, Taisne P, Agher R, Aiach M. Effects of oral and transdermal estrogen/progesterone regimens on blood coagulation and fibrinolysis in postmenopausal women. A randomized controlled trial. *Arterioscler Thromb Vasc Biol* 1997;17:3071-8.

Schaefer EJ, Lamon-Fava S, Ordovas JM, Cohn SD, Schaefer MM, Castelli WP, Wilson PWF. Factors associated with low and elevated plasma high density lipoprotein cholesterol and apolipoprotein A-I levels in the Framingham Offspring Study. *J Lipid Res* 1994;35:871-2.

Schaefer EJ, McNamara JR, Genest J Jr., Ordovas JM. Clinical significance of hypertriglyceridemia. *Semin Thromb Hemost* 1988;14:143-8.

Schectman G, Wolff N, Byrd JC, Hiatt JG, Hartz A. Physician extenders for cost-effective management of hypercholesterolemia. *J Gen Intern Med* 1996;11:277-86.

Schoonjans K, Staels B, Auwerx J. Role of the peroxisome proliferator-activated receptor (PPAR) in mediating the effects of fibrates and fatty acids on gene expression. *J Lipid Res* 1996;37:907-25.

Schrott HG, Bittner V, Vittinghoff E, Herrington DM, Hulley S. Adherence to National Cholesterol Education Program Treatment goals in postmenopausal women with heart disease. The Heart and Estrogen/Progestin Replacement Study (HERS). *JAMA* 1997;277:1281-6.

Schucker B, Wittes JT, Santanello NC, Weber SJ, McGoldrick D, Donato K, Levy A, Rifkind BM. Change in cholesterol awareness and action. Results from national physician and public surveys. *Arch Intern Med* 1991;151(4):666-73.

Schuler G, Hambrecht R, Schlierf G, Niebauer J, Hauer K, Neumann J, Hoberg E, Drinkmann A, Bacher F, Grunze M**,** Kübler W**.** Regular physical exercise and low-fat diet. Effects on progression of coronary artery disease. *Circulation* 1992;86:1-11.

Schuster H, Rauh G, Kormann B, Hepp T, Humphries S, Keller C, Wolfram G, Zollner N. Familial defective apolipoprotein B-100. Comparison with familial hypercholesterolemia in 18 cases detected in Munich. *Arteriosclerosis* 1990;10(4):577-81.

Schutz Y: Macronutrients and energy balance in obesity. *Metabolism* 1995;44:7-11.

Schwartz GG, Olsson AG, Ezkowitz MD, Ganz P, Oliver MF, Waters D, Zeiher A, Chaitman BR, Leslie S, Stern T. Myocardial Ischemia Reduction with Aggressive Cholesterol Lowering (MIRACL) Study Investigators. Effects of atorvastatin on early recurrent ischemic events in acute coronary syndromes: the MIRACL study: a randomized controlled trial. *JAMA* 2001;285:1711-8.

Schwartz JS, Boccuzzi SJ, Murray JF, Roehn JB, Cook JR, Glick H, Kinosian B, Pedersen T, Kjekshus J. Cost-effectiveness of LDL-C reduction in Medicare managed care CHD patients: implications from the Scandinavian Simvastatin Survival Study (4S) [Abstract]. *J Am Coll Cardiol* 1997;29226A.

Secker-Walker RH, Worden JK, Holland RR, Flynn BS, Detsky AS. A mass media programme to prevent smoking among adolescents: costs and cost effectiveness. *Tobacco Control* 1997;6:207-12.

Sedlis SP, Schechtman KB, Ludbrook PA, Sobel BE, Schonfeld G. Plasma apoproteins and the severity of coronary artery disease. *Circulation* 1986;73:978-86.

Seidell JC. Dietary fat and obesity: an epidemiologic perspective. *Am J Clin Nutr* 1998;67 (suppl):546S-50S.

Seidell JC: Time trends in obesity: an epidemiological perspective. *Hormone Metabol Res* 1997;29:155-8.

Selmer R. Blood pressure and twenty-year mortality in the city of Bergen, Norway. *Am J Epidemiol* 1992;136:428-40.

Seman LJ, DeLuca C, Jenner JL, Cupples LA, McNamara JR, Wilson PW, Castelli WP, Ordovas JM, Schaefer EJ. Lipoprotein(a)-cholesterol and coronary heart disease in the Framingham Heart Study. *Clin Chem* 1999;45:1039-46.

Sempos CT, Cleeman JI, Carroll MD, Johnson CL, Bachorik PS, Gordon DJ, Burt VL, Briefel RR, Brown CD, Lippel K, Rifkind BM. Prevalence of high blood cholesterol among U.S. adults. An update based on guidelines from the second report of the National Cholesterol Education Program Adult Treatment Panel. *JAMA* 1993;269:3009-14.

Shaffer J, Wexler J. Reducing low-density lipoprotein cholesterol levels in an ambulatory care system. Results of a multidisciplinary collaborative practice lipid clinic compared with traditional physician-based care. *Arch Intern Med* 1995;155:2330-5.

Shah M, Garg A. High-fat and high-carbohydrate diets and energy balance. *Diabetes Care* 1996;19:1142-52.

Sharrett AR, Sorlie PD, Chambless LE, Folsom AR, Hutchinson RG, Heiss G, Szklo M. Relative importance of various risk factors for asymptomatic carotid atherosclerosis versus coronary heart disease incidence. The Atherosclerosis Risk in Communities Study. *Am J Epidemiol* 1999;149:843-52.

Shea S, Ottman R, Gabrieli C, Stein Z, Nichols A. Family history as an independent risk factor for coronary artery disease. *J Am Coll Cardiol* 1984;4:793-801.

SHEP Cooperative Research Group. Prevention of stroke by antihypertensive drug treatment in older persons with isolated systolic hypertension. Final results of the Systolic Hypertension in the Elderly Program (SHEP). *JAMA* 1991;265:3255-64.

Shepard DS, Stason WB, Perry HM Jr., Carmen BA, Nagurney JT. Multivariate cost-effectiveness analysis: an application to optimizing ambulatory care for hypertension. *Inquiry* 1995;32:320-31.

Shepherd J, Cobbe SM, Ford I, Isles CG, Lorimer AR, Macfarlane PW, McKillop JH, Packard CJ, for the West of Scotland Coronary Prevention Study Group. Prevention of coronary heart disease with pravastatin in men with hypercholesterolemia. *N Engl J Med* 1995;333:1301-7.

Shepherd J. Fibrates and statins in the treatment of hyperlipidemia: an appraisal of their efficacy and safety. *Eur Heart J* 1995;16:5-13.

Shepherd J. Preventing coronary artery disease in the West of Scotland: implications for primary prevention. *Am J Cardiol* 1998;82:57T-9T.

Shepherd R, Stockley L. Nutrition knowledge, attitudes, and fat consumption. *J Am Diet Assoc* 1987;87:615-9.

Sherman AM, Bowen DJ, Vitolins M, Perri MG, Rosal MC, Sevick MA, Ockene JK. Dietary adherence: characteristics and interventions. *Control Clin Trials* 2000;21(suppl 5):206S-11S.

Siegmund KD, Province MA, Higgins M, Williams RR, Keller J, Todorov AA. Modeling disease incidence rates in families. *Epidemiology* 1998;9:557-62.

Silberberg JS, Wlodarczyk J, Fryer J, Ray CD, Hensley MJ. Correction for biases in a population-based study of family history and coronary heart disease. The Newcastle Family History Study I. *Am J Epidemiol* 1998a;147:1123-32.

Silberberg JS, Wlodarczyk J, Fryer J, Robertson R, Hensley MJ. Risk associated with various definitions of family history of coronary heart disease. The Newcastle Family History Study II. *Am J Epidemiol* 1998b;147:1133-9.

Simon DG. A cost-effectiveness analysis of cyclosporine in cadavernic kidney transplantation. *Med Decis Making* 1986;6:199-207.

Simons LA, Levis G, Simons J. Apparent discontinuation rates in patients prescribed lipid-lowering drugs. *Med J Aust* 1996;164:208-11.

Simons LA, Simons J. Diabetes and coronary heart disease. *N Engl J Med* 1998;339:1714-5.

Simpson KN, Snyder LB. Informing the mammography coverage debate. Results of meta-analysis, computer modeling, and issue analysis. *Int J Technol Assess Health Care* 1991;7:616-31.

Singh RB, Niaz MA, Sharma JP, Kumar R, Rastogi V, Moshiri M. Randomized, double-blind, placebo-controlled trial of fish oil and mustard oil in patients with suspected acute myocardial infarction: the Indian experiment of infarct survival--4. *Cardiovasc Drugs Ther* 1997;11:485-91.

Siscovick DS, Raghunathan TE, King I, Weinmann S, Wicklund KG, Albright J, Bovbjerg V, Arbogast P, Smith H, Kushi LH, Cobb LA, Copass MK, Psaty BM, Lemaitre R, Retzlaff B, Childs M, Knopp RH. Dietary intake and cell membrane levels of long-chain n-3 polyunsaturated fatty acids and the risk of primary cardiac arrest. *JAMA* 1995;274:1363-7.

Slack J. Risks of ischaemic heart-disease in familial hyperlipoproteinaemic states. *Lancet* 1969;2:1380-2.

Slattery ML, Berry TD, Potter J, Caan B. Diet diversity, diet composition, and risk of colon cancer (United States). *Cancer Causes Control* 1997a;8:872-82.

Slattery ML, Potter JD, Duncan DM, Berry TD. Dietary fats and colon cancer: assessment of risk associated with specific fatty acids. *Intl J Cancer* 1997b;73:670-7.

Smith GD, Song F, Sheldon TA. Cholesterol lowering and mortality: the importance of considering initial level of risk. *BMJ* 1993;306:1367-73.

Smith SC Jr., Amsterdam E, Balady GJ, Bonow RO, Fletcher GF, Froelicher V, Heath G, Limacher MC, Maddahi J, Pryor D, Redberg RF, Roccella E, Ryan T, Smaha L, Wenger NK. Prevention Conference V. Beyond secondary prevention: identifying the high-risk patient for primary prevention. Tests for silent and inducible ischemia. Writing Group II. *Circulation* 2000a;101:E12-6.

Smith SC Jr., Greenland P, Grundy SM. AHA Conference Proceedings. Prevention Conference V. Beyond secondary prevention: identifying the high-risk patient for primary prevention. Executive summary. *Circulation* 2000b;101:111-16.

Smith WF. Cost-effectiveness and cost-benefit analyses for public health programs. *Public Health Rep* 1968;83:899-906.

Smith-Warner SA, Spiegelman D, Yaun S-S, van den Brandt PA, Folsom AR, Goldbohm A, Graham S, Holmberg L, Howe GR, Marshall JR, Miller AB, Potter JD, Speizer FE, Willett WC, Wolk A, Hunter DJ. Alcohol and breast cancer in women: a pooled analysis of cohort studies. *JAMA* 1998;279:535-40.

Sniderman A, Vu H, Cianflone K. Effect of moderate hypertriglyceridemia on the relation of plasma total and LDL apo B levels. *Atherosclerosis* 1991;89:109-16.

Sniderman AD. Apolipoprotein B and apolipoprotein AI as predictors of coronary artery disease. *Can J Cardiol* 1988;4(suppl A):24A–30A.

Snowden CB, McNamara PM, Garrison RJ, Feinleib M, Kannel WB, Epstein FH. Predicting coronary heart disease in siblings—a multivariate assessment. The Framingham Heart Study. *Am J Epidemiol* 1982;115:217-22.

Sollano JA, Rose EA, Williams DL, Thornton B, Quint E, Apfelbaum M, Wasserman H, Cannavale GA, Smith CR, Reemtsma K, Greene RJ. Cost-effectiveness of coronary artery bypass surgery in octogenarians. *Ann Surg* 1998;228:297-306.

Soria LF, Ludwig EH, Clarke HRG, Vega GL, Grundy SM, McCarthy BJ. Association between a specific apolipoprotein B mutation and familial defective apolipoprotein B-100. *Proc Natl Acad Sci U S A* 1989;86:587-91.

Sorlic PD, Backlund E, Johnson NJ, Rogot E. Mortality by Hispanic status in the United States. *JAMA* 1993;270:2464-8.

Sosenko JM, Kato M, Soto R, Goldberg RB. Plasma lipid levels at diagnosis in type 2 diabetic patients. *Diabet Med* 1993;10:814-9.

Sotelo MM, Johnson SR. The effects of hormone replacement therapy on coronary heart disease. *Endocrinol Metab Clin North Am* 1997;26:313-28.

Sprecher DL, Abrams J, Allen JW, Keane WF, Chrysant SG, Ginsberg H, Fischer JJ, Johnson BF, Theroux P, Jokubaitis L. Low-dose combined therapy with fluvastatin and cholestyramine in hyperlipidemic patients. *Ann Intern Med* 1994;120:537-43.

Sprecher DL, Pearce GL, Cosgrove DM, Lytle BW, Loop FD, Pashkow FJ. Relation of serum triglyceride levels to survival after coronary artery bypass grafting. *Am J Cardiol* 2000;86:285-8.

Staessen JA, Fagard R, Thijs L, Celis H, Arabidze GG, Birkenhager WH, Bulpitt CJ, de Leeuw PW, Dollery CT, Fletcher AE, Forette F, Leonetti G, Nachev C, O'Brien ET, Rosenfeld J, Rodicio JL, Tuomilehto J, Zanchetti A. Randomised double-blind comparison of placebo and active treatment for older persons with isolated systolic hypertension. The Systolic Hypertension in Europe (Syst-Eur) Trial Investigators. *Lancet* 1997;13:350:757-64.

Stamler J, Briefel RR, Milas C, Grandits GA, Caggiula AW. Relation of changes in dietary lipids and weight, trial years 1-6, to change in blood lipids in the special intervention and usual care groups in the Multiple Risk Factor Intervention Trial. *Am J Clin Nutr* 1997;65:272S-88S.

Stamler J, Daviglus ML, Garside DB, Dyer AR, Greenland P, Neaton JD. Relationship of baseline serum cholesterol levels in 3 large cohorts of younger men to long-term coronary, cardiovascular, and all-cause mortality and to longevity. *JAMA* 2000;284:311-8.

Stamler J, Shekelle R. Dietary cholesterol and human coronary heart disease. The epidemiologic evidence. *Arch Path Lab Med* 1988;112:1032-40.

Stamler J, Stamler R, Neaton JD. Blood pressure, systolic and diastolic, and cardiovascular risks. U.S. population data. *Arch Intern Med* 1993;153:598-615.

Stamler J, Wentworth D, Neaton JD. Is relationship between serum cholesterol and risk of premature death from coronary heart disease continuous and graded? Findings in 356,222 primary screenees of the Multiple Risk Factor Intervention Trial (MRFIT). *JAMA* 1986;256:2823-8.

Stamos TD, Girard SA, Shaltoni H. Chart prompts significantly improve compliance with national cholesterol guidelines. *Circulation* 1999;100(18 suppl 1):I-239 [Abstract 1241].

Stampfer MJ, Hennekens CH, Manson JE, Colditz G, Rosner B, Willett WC. Vitamin E consumption and the risk of coronary disease in women. *N Engl J Med* 1993;328:1444-9.

Stampfer MJ, Malinow MR, Willett WC, Newcomer LM, Upson B, Ullmann D, Tishler PV, Hennekens CH. A prospective study of plasma homocyst(e)ine and risk of myocardial infarction in U.S. physicians. *JAMA* 1992;268:877-81.

Stange PV, Sumner AT. Predicting treatment costs and life expectancy for end-stage renal disease. *N Engl J Med* 1978;298:372-8.

Stary HC, Blankenhorn DH, Chandler AB, Glagov S, Insull W Jr., Richardson M, Rosenfeld ME, Schaffer SA, Schwartz CJ, Wagner WD, Wissler RW. A definition of the intima of human arteries and of its atherosclerosis-prone regions. A report from the Committee on Vascular Lesions of the Council on Arteriosclerosis, American Heart Association. *Circulation* 1992;85:391-405.

Stary HC, Chandler AB, Dinsmore RE, Fuster V, Glagov S, Insull W, Rosenfeld ME, Schwartz CJ, Wagner WD, Wissler RW. A definition of advanced types of atherosclerotic lesions and a histological classification of atherosclerosis. A report from the Committee on Vascular Lesions of the Council on Arteriosclerosis, American Heart Association. *Circulation* 1995;92:1355-74.

Stary HC, Chandler AB, Glagov S, Guyton JR, Insull W Jr., Rosenfeld ME, Schaffer SA, Schwartz CJ, Wagner WD, Wissler RW. A definition of initial, fatty streak, and intermediate lesions of atherosclerosis. A report from the Committee on Vascular Lesions of the Council on Arteriosclerosis, American Heart Association. *Arterioscler Thromb* 1994;14:840-56.

Starzl TE, Putnam CW, Koep LJ. Portacaval shunt and hyperlipidemia. *Arch Surg* 1978;113:71-4.

Stason WB, Weinstein MC. Public-health rounds at the Harvard School of Public Health. Allocation of resources to manage hypertension. *N Engl J Med* 1977;296:732-9.

Stehouwer CDA, Weijenberg MP, van den Berg M, Jakobs C, Feskens EJM, Kromhout D. Serum homocysteine and risk of coronary heart disease and cerebrovascular disease in elderly men. A 10-year follow-up. *Arterioscler Thromb Vasc Biol* 1998;18:1895-901.

Stein E. Cerivastatin in primary hyperlipidemia: A multicenter analysis of efficacy and safety. *Am J Cardiol* 1998;82:40J-6J.

Stein EA, Lane M, Laskarzewski P. Comparison of statins in hypertriglyceridemia. *Am J Cardiol* 1998;81(4A):6B-69B.

Steinberg KK, Smith SJ, Thacker SB, Stroup DF. Breast cancer risk and duration of estrogen use: the role of study design in meta-analysis. *Epidemiology* 1994;4:415-21.

Steiner G, Adelman AG, Silver MD. Early coronary atherosclerosis in primary type V hyperlipoproteinemia. *Can Med Assoc J* 1971;105:1172-4.

Steiner G, Schwartz L, Shumak S, Poapst M. The association of increased levels of intermediate-density lipoproteins with smoking and with coronary artery disease. *Circulation* 1987;75:124-30.

Stenestrand U, Wallentin L. Early statin treatment following acute myocardial infarction and 1-year survival. *JAMA* 2001;285:430-6.

Stephens NG, Parsons A, Schofield PM, Kelly F, Cheeseman K, Mitchinson MJ. Randomised controlled trial of vitamin E in patients with coronary disease: Cambridge Heart Antioxidant Study (CHAOS). *Lancet* 1996;347:781-6.

Stern MP, Haffner SM. Body fat distribution and hyperinsulinemia as risk factors for diabetes and cardiovascular disease. *Arteriosclerosis* 1986;6:123-30.

Stirling CM, Isles CG. Rhabdomyolysis due to simvastatin in a transplant patient: Are some statins safer than others? *Nephrol Dial Transplant* 2001;16:873-4.

Stoffel W, Demant T. Selective removal of apolipoprotein B-containing serum lipoproteins from blood plasma. *Proc Natl Acad Sci U S A* 1981;78:611-5.

Stone NJ, Levy RI, Fredrickson DS, Verter J. Coronary artery disease in 116 kindred with familial type II hyperlipoproteinemia. *Circulation* 1974;49:476-88.

Stone NJ. Secondary causes of hyperlipidemia. *Med Clin North Am* 1994;78:117-41.

Stone PW, Teutsch S, Chapman RH, Bell C, Goldie SJ, Neumann PJ. Cost-utility analyses of clinical preventive services. Published ratios, 1976–1997. *Am J Prev Med* 2000;19:15-23.

Strandberg TE, Tilvis RS, Lindberg O, Valvanne J, Sairanen S, Ehnholm C, Tuomilehto J. High plasma insulin is associated with lower LDL cholesterol in elderly individuals. *Atherosclerosis* 1996;121:267-73.

Streitz JM Jr., Ellis FH Jr., Tilden RL, Erickson RV. Endoscopic surveillance of Barrett's esophagus: a cost-effectiveness comparison with mammographic surveillance for breast cancer. *Am J Gastroenterol* 1998;93:911-15.

Stroes ES, Koomans HA, deBruin TW, Rabelink TJ. Vascular function in the forearm of hypercholesterolaemic patients off and on lipid-lowering medication. *Lancet* 1995;346:467-71.

Strong JP, Malcolm GT, Oalmann MC, Wissler RW. The PDAY Study: natural history, risk factors, and pathobiology. *Ann NY Acad Sci* 1997;811:226-37.

Strong JP, Malcom GT, McMahan CA, Tracy RE, Newman WP III, Herderick EE, Cornhill JF. Prevalence and extent of atherosclerosis in adolescents and young adults. Implications for prevention from the pathobiological determinants of atherosclerosis in youth study. *JAMA* 1999;281:727-35.

Stuart-Shor E, Skinner SS, Kemper AJ, McCleary NC, Clark SJ, Waldman HM. A nurse-directed, community based, integrated multiple cardiac risk reduction program: physiologic and behavioral outcomes [Abstract]. *Circulation* 1999;100(18 suppl 1):I-100.

Stubbs P, Seed M, Lane D, Collinson P, Kendall F, Noble M. Lipoprotein(a) as a risk predictor for cardiac mortality in patients with acute coronary syndromes. *Eur Heart J* 1998;19:1355-64.

Stuyt PM, Van-t-Laar A. Clinical features of type III hyper-lipoproteinaemia. *Neth J Med* 1983;26(4):104-11.

Su HY, Sheu WH, Chin HM, Jeng CY, Chen YD, Reaven GM. Effect of weight loss on blood pressure and insulin resistance in normotensive and hypertensive obese individuals. *Am J Hypertens* 1995;8:1067-71.

Su W, Campos H, Judge H, Walsh BW, Sacks FM. Metabolism of Apo(a) and ApoB100 of lipoprotein(a) in women: effect of postmenopausal estrogen replacement. *J Clin Endocrinol Metab* 1998;83:3267-76.

Sundquist J, Winkleby MA, Pudaric S. Cardiovascular disease risk factors among older black, Mexican-American, and white women and men: an analysis of NHANES III, 1988-1994. Third National Health and Nutrition Examination Survey. *J Am Geriatr Soc* 2001;49:109-16.

Sundquist J, Winkleby MA. Cardiovascular risk factors in Mexican American adults: a transcultural analysis of NHANES III, 1988–1994. *Am J Public Health* 1999;89:723-30.

Superko HR, Greenland P, Manchester RA, Andreadis NA, Schectman G, Hendriksen West N, Hunninghake D, Haskell WL, Probstfield JL. Effectiveness of low-dose colestipol therapy in patients with moderate hypercholesterolemia. *Am J Cardiol* 1992;70:135-40.

Superko HR, Krauss RM. Differential effects of nicotinic acid in subjects with different LDL subclass patterns. *Atherosclerosis* 1992;95:69-76.

Takata K, Saku K, Ohta T, Takata M, Bai H, Jimi S, Liu R, Sato H, Kajiyama G, Arakawa K. A new case of ApoA-I deficiency showing codon 8 nonsense mutation of the ApoA-I gene without evidence of coronary heart disease. *Arterioscler Thromb Vasc Biol* 1995;15:1866-74.

Takeichi S, Yukawa N, Nakajima Y, Osawa M, Saito T, Seto Y, Nakano T, Saniabadi AR, Adachi M, Wang T, Nakajima K. Association of plasma triglyceride-rich lipoprotein remnants with coronary atherosclerosis in cases of sudden cardiac death. *Atherosclerosis* 1999;142:309-15.

Tall AR. An overview of reverse cholesterol transport. *Eur Heart J* 1998;19(suppl A):A31-A35.

Tamai O, Matsuoka H, Itabe H, Wada Y, Kohno K, Imaizumi T. Single LDL apheresis improves endothelium-dependent vasodilation in hypercholesterolemic humans. *Circulation* 1997;95:76-82.

Tamura A, Mikuriya Y, Nasu M. Coronary Artery Regression Study (CARS) Group. Effect of pravastatin on progression of coronary atherosclerosis in patients with serum total cholesterol levels from 160 to 220 mg/dL and angiographically documented coronary artery disease. *Am J Cardiol* 1997;79:893-6.

Tangirala RK, Tsukamoto K, Chun SH, Usher D, Pure E, Rader DJ. Regression of atherosclerosis induced by liver-directed gene transfer of apolipoprotein A-I in mice. *Circulation* 1999;100:1816-22.

Tardif JC, Cote G, Lesperance J, Bourassa M, Lambert J, Doucet S, Bilodeau L, Nattel S, de Guise P. Probucol and multivitamins in the prevention of restenosis after coronary angioplasty. Multivitamins and Probucol Study Group. *N Engl J Med* 1997;337:365-72.

Tatami R, Mabuchi H, Ueda K, Ueda R, Haba T, Kametani T, Ito S, Koizumi J, Ohta M, Miyamoto S, Nakayama A, Kanaya H, Oiwake H, Genda A, Takeda R. Intermediate-density lipoprotein and cholesterol-rich very low density lipoprotein in angiographically determined coronary artery disease. *Circulation* 1981;64:1174-84.

Tato F, Vega GL, Grundy SM. Effects of crystalline nicotinic acid-induced hepatic dysfunction on serum low-density lipoprotein cholesterol and lecithin cholesteryl acyl transferase. *Am J Cardiol* 1998;81:805-7.

Tato F, Vega GL, Grundy SM. Bimodal distribution of cholesteryl ester transfer protein activities in normotriglyceridemic men with low HDL cholesterol concentrations. *Arterioscler Thromb Vasc Biol* 1995;15(4):446-51.

Taylor CB, Houston-Miller N, Killen JD, DeBusk RF. Smoking cessation after acute myocardial infarction: effects of a nurse-managed intervention. *Ann Intern Med* 1990;113:118-23.

Taylor HA, Mickel MC, Chaitman BR, Sopko G, Cutter GR, Rogers WJ. Long-term survival of African Americans in the Coronary Artery Surgery Study (CASS). *J Am Coll Cardiol* 1997;29:358-64.

Teng B, Sniderman AD, Soutar AK, Thompson GR. Metabolic basis of hyperapobetalipoproteinemia. Turnover of apolipoprotein B in low density lipoprotein and its precursors and subfractions compared with normal and familial hypercholeresterolemia. *J Clin Invest* 1986;77:663-72.

Tengs T, personal communication. Data from the "Cost-Effectiveness Database" produced by the Health Priorities Research Group at the University of California, Irvine (http://www.healthpriorities.uci.edu).

Tengs TO, Adams ME, Pliskin JS, Safran DG, Siegel JE, Weinstein MC, Graham JD. Five-hundred life-saving interventions and their cost-effectiveness. *Risk Anal* 1995;15:369-90.

Tengs TO, Wallace A. One thousand health-related quality-of-life estimates. *Med Care* 2000;38:583-637.

Theroux P, Fuster V. Acute coronary syndromes: unstable angina and non-Q-wave myocardial infarction. *Circulation* 1998;97:1195-220.

Thomas, TS. Improving care with nurse case managers: practical aspects of designing lipid clinics. *Am J Cardiol* 1997;80:62H-5H.

Thompson GR, Miller JP, Breslow JL. Improved survival of patients with homozygous familial hypercholesterolaemia treated with plasma exchange. *BMJ* 1985;291:1671-3.

Thompson GR, Myant NB. Regression of atherosclerosis. *Atherosclerosis* 1980;35:347-8.

Thompson GR. Angiographic evidence for the role of triglyceride-rich lipoproteins in progression of coronary artery disease. *Eur Heart J* 1998;19(suppl H):H31-6.

Thourani VH, Weintraub WS, Stein B, Gebhart SS, Craver JM, Jones EL, and Guyton RA. Influence of diabetes mellitus on early and late outcome after coronary artery bypass grafting. *Ann Thorac Surg* 1999;67:1045-52.

Thun MJ, Peto R, Lopez AD, Monaco JH, Henley SJ, Heath CW, Doll R. Alcohol consumption and mortality among middle-aged and elderly U.S. adults. *N Engl J Med* 1997;337:1705-14.

Tippett KS, Cleveland LE. How current diets stack up: comparison with dietary guidelines. In: America's eating habits: changes and consequences. Washington, D.C.: United States Department of Agriculture, Economic Research Service, 2000;51-70.

Tobert JA, Bell GD Birtwell J, James I, Kukovetz WR, Pryor JS, Buntinx A, Holmes IB, Chao YS, Bolognese JA. Cholesterol-lowering effect of mevinolin, an inhibitor of 3-hydroxy-3-methylglutaryl-coenzyme a reductase, in healthy volunteers. *J Clin Invest* 1982;69:913-9.

Toor M, Katchalsky A, Agmon J, Allalouf D. Atherosclerosis and related factors in immigrants to Israel. *Circulation* 1960;22:265-79.

Torgerson DJ. HRT and its impact on the menopause, osteoporosis and breast cancer. *Expert Opin Pharmacother* 2000;6:1163-9.

Tornvall P, Bavenholm P, Landou C, de Faire U, Hamsten A. Relation of plasma levels and composition of apolipoprotein B-containing lipoproteins to angiographically defined coronary artery disease in young patients with myocardial infarction. *Circulation* 1993;88:2180-9.

Toto RD, Grundy SM, Vega GL. Pravastatin treatment of very low density, intermediate density and low density lipoproteins in hypercholesterolemia and combined hyperlipidemia secondary to the nephrotic syndrome. *Am J Nephrol* 2000;20:12-7.

Tracy RP, Lemaitre RN, Psaty BM, Ives DG, Evans RW, Cushman M, Meilahn EN, Kuller LH. Relationship of C-reactive protein to risk of cardiovascular disease in the elderly. Results from the Cardiovascular Health Study and the Rural Health Promotion Project. *Arterioscler Thromb Vasc Biol* 1997a;17:1121-7.

Tracy RP, Psaty BM, Macy E, Bovill EG, Cushman M, Cornell ES, Kuller LH. Lifetime smoking exposure affects the association of C-reactive protein with cardiovascular disease in risk factors and subclinical disease in healthy elderly subjects. *Arterioscler Thromb Vasc Biol* 1997b;17:2167-76.

Traven ND, Kuller LH, Ives DG, Rutan GH, Perper JA. Coronary heart disease mortality and sudden death among the 35-44 year age group in Allegheny County, Pennsylvania. *Ann Epidemiol* 1996;6:130-6.

Tripathy D, Carlsson M, Almgren P, Isomaa B, Taskinen MR, Tuomi T, Groop LC. LDL cholesterol. Insulin secretion and insulin sensitivity in relation to glucose tolerance: lessons from the Botnia Study. *Diabetes* 2000;49:975-80.

Tsevat J, Kuntz KM, Orav EJ, Weinstein MC, Sacks FM, Goldman L. Cost-effectiveness of pravastatin therapy for survivors of myocardial infarction with average cholesterol levels. *Am Heart J* 2001;141(5):727-34.

Tsevat J. Impact and cost-effectiveness of smoking interventions. *Am J Med* 1992;93(suppl 1A):43S-7S.

Tsimihodimos V, Miltiadous G, Elisaf M. Therapy with statins is effective in some patients with homozygous familial hypercholesterolemia. *Atherosclerosis* 2000;153:527.

Tucker KL, Mahnken B, Wilson PW, Jacques P, Selhub J. Folic acid fortification of the food supply. Potential benefits and risks for the elderly population. *JAMA* 1996a;276:1879-85. (Erratum, *JAMA* 1997;277:714.)

Tucker KL, Selhub J, Wilson PW, Rosenberg IH. Dietary intake patterns relates to plasma folate and homocysteine concentrations in the Framingham Heart Study. *J Nutr* 1996b;126:3025-31.

Tunstall-Pedoe H, Kuulasmaa K, Amouyel P, Arveiler D, Rajakangas AM, Pajak A. Myocardial infarction and coronary deaths in the World Health Organization MONICA Project: Registration procedures, event rates, and case-fatality rates in 38 populations from 21 countries in four continents. *Circulation* 1994;90:583-612.

Tunstall-Pedoe H, Kuulasmaa K, Mahonen M, Tolonen H, Ruokokoski E, Amouyel P. Contribution of trends in survival and coronary-event rates to changes in coronary heart disease mortality: 10-year results from 37 WHO MONICA Project populations. *Lancet* 1999;353:1547-57.

Turley ML, Skeaff CM, Mann JI, Cox B. The effect of a low-fat, high-carbohydrate diet on serum high density lipoprotein cholesterol and triglyceride. *Eur J Clin Nutr* 1998; 52:728-32.

Twisk J, Gillian-Daniel DL, Tebon A, Wang L, Barrett PH, Attie AD. The role of the LDL receptor in apolipoprotein B secreation. *J Clin Invest* 2000;105:521-32.

Tybjaerg-Hansen A, Gallagher J, Vincent J, Houlston R, Talmud P, Dunning AM, Seed M, Hamsten A, Humphries SE, Myant NB. Familial defective apolipoprotein b-100: Detection in the United Kingdom and Scandinavia, and clinical characteristics of ten cases. *Atherosclerosis* 1990;80(3):235-42.

U.S. Department of Agriculture and U.S. Department of Health and Human Services. Nutrition and your health: dietary guidelines for Americans. 5th edition. Home and Garden Bulletin no. 232. Washington, D.C.: U.S. Department of Agriculture 2000:87 pages.

U.S. Department of Health and Human Services. Food and Drug Administration. Food labeling: health claims; oats and coronary heart disease. Final rule. Federal Register 1997a:3583-3601.

U.S. Department of Health and Human Services. Food and Drug Administration. Food labeling: health claims; oats and coronary heart disease. Proposed rule. Federal Register 1996a:296-337.

U.S. Department of Health and Human Services. Food and Drug Administration. Food labeling: health claims; soluble fiber from certain foods and coronary heart disease. Final rule. Federal Register 1998a:8103-21.

U.S. Department of Health and Human Services. Food and Drug Administration. Food labeling: health claims; soluble fiber from certain foods and coronary heart disease. Proposed rule. Federal Register 1997b:28234-45.

U.S. Department of Health and Human Services. Food and Drug Administration. Food labeling: health claims; soy protein and coronary heart disease. Final rule. Federal Register 1999a:57699-733.

U.S. Department of Health and Human Services. Food and Drug Administration. Food labeling: health claims; soy protein and coronary heart disease. Proposed rule. Federal Register 1998b:6297-301.

U.S. Department of Health and Human Services. Food and Drug Administration. Food labeling: Trans-fatty acids in nutrition labeling, nutrient content claims, and health claims. Proposed rule. Federal Register 1999b:62746-825.

U.S. Department of Health and Human Services. Healthy People 2010; Conference Edition. Volumes I and II. Washington DC: U.S. Department of Health and Human Services, January 2000. 1200 pages.

U.S. Department of Health and Human Services. Physical activity and health: a report of the Surgeon General. Atlanta, Georgia: U.S. Department of Health and Human Services, Public Health Service, Centers for Disease Control and Prevention, National Center for Chronic Disease Prevention and Health Promotion, 1996b:300 pages.

U.S. Preventive Services Task Force. Guide to clinical preventive services: report of the U.S. Preventive Services Task Force;2nd edition. Baltimore: Williams & Wilkins, 1996;504 pages.

U.S. Surgeon General. Reducing the consequences of smoking: 25 years of progress. A report of the Surgeon General. DHHS pub. no. (CDC) 89-8411. Bethesda MD: U.S. Department of Health and Human Services, Public Health Service, Office on Smoking and Health, 1989;703.

U.S. Surgeon General. The health benefits of smoking cessation. A report of the Surgeon General. DHHS pub. no. (CDC) 90-8416. Washington, D.C.: U.S. Department of Health and Human Services, 1990.

UK Prospective Diabetes Study (UKPDS) Group. Effect of intensive blood-glucose control with metformin on complications in overweight persons with type 2 diabetes: (UKPDS 34). *Lancet* 1998a;352:854-65.

UK Prospective Diabetes Study (UKPDS) Group. Efficacy of atenolol and captopril in reducing risk of macrovascular and microvascular complications in type 2 diabetes: (UKPDS 39). *BMJ* 1998b;317:713-20.

UK Prospective Diabetes Study (UKPDS) Group. Intensive blood-glucose control with sulphonylureas or insulin compared with conventional treatment and risk of complications in patients with type 2 diabetes (UKPDS 33). *Lancet* 1998c;352:837-53.

UK Prospective Diabetes Study (UKPDS) Group. Tight blood pressure control and risk of macrovascular and microvascular complications in type 2 diabetes: (UKPDS 38). *BMJ* 1998d; 317:703-13.

Umans-Eckenhausen MA, Defesche JC, Sijbrands EJ, Scheerder RLJM, Kastelein JJ. Review of first five years of screening for familial hypercholesterolaemia in the Netherlands. *Lancet* 2001;357:165-8.

Unpublished estimates of "The Present Value of Lifetime Earnings by Age and Sex, U.S., 1997" obtained in 2000 from Wendy Max, University of California at San Francisco.

Urquhart, J. Correlates of variable patient compliance in drug trials: Relevance in the new health care environment. *Adv Drug Res* 1995;26:237-57.

Utermann G. Genetic polymorphism of apolipoprotein E-impact on plasma lipoprotein metabolism. In: Crepaldi G, Tiengo A, Baggio G, eds. Diabetes, obesity and hyperlipidemias—III. Amsterdam: Elsevier, 1985;28.

Valeri A, Gelfand J, Blum C, Appel GB. Treatment of the hyperlipidemia of the nephrotic syndrome: a controlled trial. *Am J Kidney Dis* 1986;8:388-96.

van den Hoogen PC, Feskens EJ, Nagelkerke NJ, Menotti A, Nissinen A, Kromhout D. The relation between blood pressure and mortality due to coronary heart disease among men in different parts of the world. Seven Countries Study Research Group. *N Engl J Med* 2000;342:1-8.

van der Maas PJ, de Koning HJ, van Ineveld BM, van Oortmarssen GJ, Habbema JD, Lubbe KT, Geerts AT, Collette HJ, Verbeek AL, Hendriks JH, Rombach JJ. The cost-effectiveness of breast cancer screening. *Int J Cancer* 1989;43:1055-60.

Van Horn L, Kavey RE. Diet and cardiovascular disease prevention: what works? *Ann Behav Med* 1997;19:197-212.

Van Horn L, Liu K, Parker D, Emidy L, Liao Y, Pan WH, Giumetti D, Hewitt J, Stamler J. Serum lipid response to oat product intake with a fat modified diet. *JADA* 1986;86:759-64.

van Lenten BJ, Hama SY, de Beer FC, Stafforini DM, McIntyre TM, Prescott SM, La Du BN, Fogelman AM, Navab M. Anti-inflammatory HDL becomes pro-inflammatory during the acute phase response. Loss of protective effect of HDL against LDL oxidation in aortic wall cell cocultures. *J Clin Invest* 1995;96:2758-67.

Vanhala MJ, Kumpusalo EA, Pitkajarvi TK, Notkola IL, Takala JK. Hyperinsulinemia and clustering of cardiovascular risk factors in middle-aged hypertensive Finnish men and women. *J Hypertens* 1997;15:475-81.

Vanhanen HT, Blomqvist S, Ehnholm C, Hyvonen M, Jauhiainen M, Torstila I, Miettinen TA. Serum cholesterol, cholesterol, precursors, and plant sterols in hypercholesterolemic subjects with different apoE phenotypes during dietary sitostanol ester treatment. *J Lipid Res* 1993; 34:1535-44.

Vasan RS, Larson MG, Evans JC, O'Donnell CJ, Levy D. High normal blood pressure and risk of cardiovascular disease: the Framingham Heart Study. *Circulation* 1999;100(18 suppl 1):34.

Vega GL, Clark LT, Tang A, Marcovina S, Grundy SM, Cohen JC. Hepatic lipase activity is lower in African American men than in white American men: effects of 5' flanking polymorphism in the hepatic lipase gene (LIPC). *J Lipid Res* 1998;39:228-32.

Vega GL, Denke MA, Grundy SM. Metabolic basis of primary hypercholesterolemia. *Circulation* 1991;84:118-28.

Vega GL, Grundy SM. Does measurement of apolipoprotein B have a place in cholesterol management? *Arteriosclerosis* 1990a;10:668-71.

Vega GL, Grundy SM. Gemfibrozil therapy in primary hypertriglyceridemia associated with coronary heart disease. *JAMA* 1985;253:2398-403.

Vega GL, Grundy SM. Hypoalphalipoproteinemia (low high density lipoprotein) as a risk factor for coronary heart disease. *Curr Opin Lipidol* 1996;7:209-16.

Vega GL, Grundy SM. In vivo evidence for reduced binding of low density lipoproteins to receptors as a cause of primary moderate hypercholesterolemia. *J Clin Invest* 1986;78:1410-4.

Vega GL, Grundy SM. Lipoprotein responses to treatment with lovastatin, gemfibrozil, and nicotinic acid in normolipidemic patients with hypoalphalipoproteinemia. *Arch Intern Med* 1994;154:73-82.

Vega GL, Grundy SM. Lovastatin therapy in nephrotic hyperlipidemia: effects on lipoprotein metabolism. *Kidney Int* 1988;33:1160-8.

Vega GL, Grundy SM. Management of primary mixed hyperlipidemia with lovastatin. *Arch Intern Med* 1990b;150:1313-9.

Vega GL, Grundy SM. Primary hypertriglyceridemia with borderline high cholesterol and elevated apolipoprotein B concentrations. Comparison of gemfibrozil vs. lovastatin therapy. *JAMA* 1990c;264:2759-66.

Veierod MB, Laake P, Theele DS. Dietary fat intake and risk of prostate cancer: a prospective study of 25,708 Norwegian men. *Intl J Cancer* 1997;73:634-8.

Venkatesan S, Cullen P, Pacy P, Halliday D, Scott J. Stable isotopes show a direct relation between VLDL apoB overproduction and serum triglyceride levels and indicate a metabolically and biochemically coherent basis for familial combined hyperlipidemia. *Arterioscler Thromb* 1993;13:1110-8.

Verges BL. Dyslipidaemia in diabetes mellitus. Review of the main lipoprotein abnormalities and their consequences on the development of atherogenesis. *Diabetes Metab* 1999;25(suppl 3):32-40.

Verhoef P, Kok FJ, Kruyssen DA, Schouten EG, Witteman JC, Grobbee DE, Ueland PM, Refsum H. Plasma total homocysteine, B vitamins, and risk of coronary atherosclerosis. *Arterioscler Thromb Vasc Biol* 1997;17:989-95.

Vermeer BJ, van Gent CM, Goslings B, Polano MK. Xanthomatosis and other clinical findings in patients with elevated levels of very low density lipoproteins. *Br J Dermatol* 1979;100(6):657-66.

Visser M, Bouter LM, McQuillan GM, Werner MH, Harris TB. Elevated C-reactive protein levels in overweight and obese adults. *JAMA* 1999;282:2131-5.

Vogt MT, Cauley JA, Newman AB, Kuller LH, Hulley SB. Decreased ankle/arm blood pressure index and mortality in elderly women. *JAMA* 1993;270:465-9.

von Schacky C, Angerer P, Kothny W, Theisen K, Mudra H. The Effect of dietary ω-3 fatty acids on coronary atherosclerosis. A randomized, double-blind, placebo-controlled trial. *Ann Intern Med* 1999;130:554-62.

Vu-Dac N, Schoonjans K, Kosykh V, Dallongeville J, Fruchart JC, Staels B, Auwerx J. Fibrates increase human apolipoprotein A-11 expression through activation of the peroxisome proliferator-activated receptor. *J Clin Invest* 1995;96:741-50.

Vuksan V, Sievenpiper JL, Owen R, Swilley JA, Spadafora P, Jenkins DJ, Vidgen E, Brighenti F, Josse RG, Leiter LA, Xu Z, Novokmet R. Beneficial effects of viscous dietary fiber from Konjac-mannan in subjects with the insulin resistance syndrome: results of a controlled metabolic trial. *Diabetes Care* 2000;23:9-14.

Vuorio AF, Gylling H, Turtola H, Kontula K, Ketonen P, Miettinen TA. Stanol ester margarine alone and with simvastatin lowers serum cholesterol in families with familial hypercholesterolemia caused by the FH-North Karelia Mutation. *Arterio Thromb Vasc Biol* 2000;20:500-6.

Wadden T, Wingate B. Behavioral assessment and treatment of markedly obese persons. In: Wadden T, VanItallie T, eds. Treatment of the seriously obese patient. New York: Guilford Press, 1992:290-330.

Wadden TA, Foster GD, Letizia KA, Mullen JL. Long-term effects of dieting on resting metabolic rate in obese outpatients. *JAMA* 1990;264:707-11.

Wadden TA, Sternberg JA, Letizia KA, Stunkard AJ, Foster GD. Treatment of obesity by very low calorie diet, behavior therapy, and their combination: a five-year perspective. *Int J Obes* 1989;13(suppl 2):39-46.

Wadden TA, Stunkard AJ. Controlled trial of very low calorie diet, behavior therapy and their combination in the treatment of obesity. *J Consult Clin Psychol* 1986;54:482-8.

Wakabayashi Y, Okubo M, Shimada H, Sato N, Koide A, Marumo F, Nakamura H. Decreased VLDL apoprotein cii/apoprotein ciii ratio may be seen in both normotriglyceridemic and hypertriglyceridemic patients on chronic hemodialysis treatment. *Metabolism* 1987;36(9):815-20.

Walden CE, Retzlaff BM, Buck BL, McCann BS, Knopp RH. Lipoprotein lipid response to the National Cholesterol Education Program Step II diet by hypercholesterolemic and combined hyperlipidemic women and men. *Arterioscler Throm Vasc Biol* 1997;17:375-82.

Walden CE, Retzlaff BM, Buck BL, Wallick S, McCann BS, Knopp RH. Differential effect of National Cholesterol Education Program (NCEP) Step II diet on HDL cholesterol, its subfractions, and apoprotein A-I in hypercholesterolemic women and men after 1 year: the beFIT study. *Arterioscler Throm Vasc Biol* 2000;20:1580-7.

Walsh BW, Kuller LH, Wild RA, Paul S, Farmer M, Lawrence JB, Shah AS, Anderson PW. Effects of raloxifene on serum lipids and coagulation factors in healthy postmenopausal women. *JAMA* 1998;279:1445-51.

Walsh BW, Li H, Sacks FM. Effects of postmenopausal hormone replacement with oral and transdermal estrogen on high density lipoprotein metabolism. *J Lipid Res* 1994;35:2083-93.

Walsh BW, Schiff I, Rosner B, Greenberg L, Ravnikar V, Sacks FM. Effects of postmenopausal estrogen replacement on the concentrations and metabolism of plasma lipoproteins. *N Engl J Med* 1991;325:1196-204.

Wanner C, Krämer-Guth A, Galle J. Use of HMG-CoA reductase inhibitors after kidney and heart transplantation: lipid-lowering and immunosuppressive effects. *BioDrugs* 1997;8:387-93.

Warner KE, Smith RJ, Smith DG, Fries BE. Health and economic implications of a work-site smoking-cessation program: a simulation analysis. *J Occup Med* 1996;38:981-92.

Wasley MA, McNagny SE, Phillips VL, Ahluwalia JS. The cost-effectiveness of the nicotine transdermal patch for smoking cessation. *Prev Med* 1997;26:264-70.

Waters D, Higginson L, Gladstone P, Boccuzzi SJ, Cook T, Lesperance J, for the CCAIT Study Group. Effects of cholesterol lowering on the progression of coronary atherosclerosis in women. A Canadian Coronary Atherosclerosis Intervention Trial (CCAIT) Substudy. *Circulation* 1995; 92:2404-10.

Waters D, Higginson L, Gladstsone P, Kimball B, Le May M, Boccuzzi SJ, Lesperance J. Effects of monotherapy with an HMG-CoA reductase inhibitor on the progression of coronary atherosclerosis as assessed by serial quantitative arteriography. The Canadian Coronary Atherosclerosis Intervention Trial. *Circulation* 1994;89:959-68.

Waters D, Lesperance J, Francetich M, Causey D, Theroux P, Chiang YK, Hudon G, Lemarbre L, Reitman M, Joyal M, et al. A controlled clinical trial to assess the effect of a calcium channel blocker on the progression of coronary atherosclerosis. *Circulation* 1990;82:1940-53.

Waters DD, Azar RR. Should intensive cholesterol lowering play a role in the management of acute coronary syndromes? *Am J Cardiol* 2000;86(suppl):35J-43J.

Watkins LO, Neaton JD, Kuller LH. Racial differences in high density lipoprotein cholesterol and coronary heart disease incidence in the usual-care group of the Multiple Risk Factor Intervention Trial. *Am J Cardiol* 1986;57:538-45.

Watts GF, Lewis B, Brunt JN, Lewis ES, Coltart DJ, Smith LD, Mann JI, Swan AV. Effects on coronary artery disease of lipid-lowering diet, or diet plus cholestyramine, in the St. Thomas' Atherosclerosis Regression Study (STARS). *Lancet* 1992;339:563-9.

Weggemans RM, Zock PL, Katan MB. Dietary cholesterol from eggs increases the ratio of total cholesterol to high-density lipoprotein cholesterol in humans; a meta-analysis. *Am J Clin Nutr* 2001;73:885-91.

Wei M, Mitchell BD, Haffner SM, Stern MP. Effects of cigarette smoking, diabetes, high cholesterol, and hypertension on all-cause mortality and cardiovascular disease mortality in Mexican Americans. The San Antonio Heart Study. *Am J Epidemiol* 1996;144:1058-65.

Weinberger MH. Antihypertensive therapy and lipids: evidence, mechanisms, and implications. *Arch Intern Med* 1985;145:1102-5.

Weinstein MC, Stason WB. Cost-effectiveness of coronary artery bypass surgery. *Circulation* 1982;66(suppl III):56S-66S.

Weinstein MC, Stason WB. Foundations of cost effectiveness analysis for health and medical practices. *N Engl J Med* 1977;296:716-21.

Weinstein MC. From cost-effectiveness ratios to resource allocation: where to draw the line? In: Sloan FA, ed. Valuing health care: costs, benefits, and effectiveness of pharmaceuticals and other medical technologies. New York: Cambridge University Press, 1995;273 pages.

Weise WJ, Possidente CJ. Fatal rhabdomyolysis associated with simvastatin in a renal transplant patient. *Am J Med* 2000;108:351-2.

Weisgraber KH, Innerarity TL, Rall SC Jr., Mahley RW. Atherogenic lipoproteins resulting from genetic defects of apolipoproteins B and E. *Ann N Y Acad Sci* 1990;598:37-48.

Welty TK, Lee ET, Yeh J, Cowan LD, Go O, Fabsitz RR, Le NA, Oopik AJ, Robbins DC, Howard BV. Cardiovascular disease risk factors among American Indians: the Strong Heart Study. *Am J Epidemiol* 1995;142:269-87.

West CE, Sullivan DR, Katan MB, Halferkamps IL, van der Torre HW. Boys from populations with high-carbohydrate intake have higher fasting triglyceride levels than boys from populations with high-fat intake. *Am J Epidemiol* 1990;131:271-82.

West MS, Herd A, Ballantyne CM, Pownall HJ, Simpson S, Gould L, Gotto AM Jr. The lipoprotein and coronary atherosclerosis study (LCAS): design, methods and baseline data of a trial of fluvastatin in patients without severe hypercholesterolemia. *Control Clin Trials* 1996;17:550-83.

Westerveld HT, van Lennep JE, van Lennep HW, Liem AH, de Boo JA, van der Schouw YT, Erkelens DW. Apolipoprotein B and coronary artery disease in women: a cross-sectional study in women undergoing their first coronary angiography. *Arterioscler Thromb Vasc Biol* 1998;18:1101-7.

Westrate JA, Meijer GW. Plant sterol-enriched margarines and reduction of plasma total- and LDL-cholesterol concentrations in normocholesterolaemic and mildly hypercholesterolaemic subjects. *Eur J Clin Nutr* 1998;52:334-43.

Whincup PH, Refsum H, Perry IJ, Morris R, Walker M, Lennon L, Thomson A, Ueland PM, Ebrahim SB. Serum total homocysteine and coronary heart disease: prospective study in middle aged men. *Heart* 1999;82:448-54.

White HD, Simes RJ, Anderson NE, Hankey GJ, Watson JD, Hunt D, Colquhoun DM, Glasziou P, MacMahon S, Kirby AC, West MJ, Tonkin AM. Pravastatin therapy and the risk of stroke. *N Engl J Med.* 2000;343:317-26.

Wilcosky T, Hyde J, Anderson JJB, Bangdiwala S, Duncan B. Obesity and mortality in the lipid research clinics program follow-up study. *J Clin Epidemiol* 1990;43:743-52.

Willett WC, Green A, Stampfer MJ, Speizer FE, Colditz GA, Rosner B, Monson RR, Stason W, Hennekens CH. Relative and absolute excess risks of coronary heart disease among women who smoke cigarettes. *N Engl J Med* 1987;317(21):1303-9.

Willett WC, Stampfer MJ, Manson JE, Colditz GA, Speizer FE, Rosner BA, Sampson LA, Hennekens CH. Intake of trans-fatty acids and risk of coronary heart disease among women. *Lancet* 1993;341:581-5.

Willett WC. Is dietary fat a major determinant of body fat? *Am J Clin Nutr* 1998;67 (suppl):556S-62S.

Willett WC: Fat, energy and breast cancer. *J Nutr* 1997;127(5 suppl):921S-32S.

Williams A. Economics of coronary artery bypass grafting. *BMJ* 1985;291:326-9.

Williams RR, Hunt SC, Heiss G, Province MA, Bensen JT, Higgins M, Chamberlain RM, Ware J, Hopkins PN. Usefulness of cardiovascular family history data for population-based preventive medicine and medical research (the Health Family Tree Study and the NHLBI Family Heart Study). *Am J Cardiol* 2001;87:129-35.

Wilson DE, Emi M, Iverius PH, Hata A, Wu LL, Hillas E, Williams RR, Lalouel JM. Phenotypic expression of heterozygous lipoprotein lipase deficiency in the extended pedigree of a proband homozygous for a missense mutation. *J Clin Invest* 1990;86:735-50.

Wilson MA, Vega GL, Gylling H, Grundy SM. Persistence of abnormalities in metabolism of apolipoproteins B-100 and A-I after weight reduction in patients with primary hypertriglyceridemia. *Arteriosclerosis & Thrombosis* 1992;12:976-84.

Wilson PW, D'Agostino RB, Levy D, Belanger AM, Silbershatz H, Kannel WB. Prediction of coronary heart disease using risk factor categories. *Circulation* 1998;97:1837-47.

Wilson PW, Garrison RJ, Castelli WP, Feinleib M, McNamara PM, Kannel WB. Prevalence of coronary heart disease in the Framingham Offspring Study: role of lipoprotein cholesterols. *Am J Cardiol* 1980;46:649-54.

Wingard DL, Barrett-Connor E. Heart disease and diabetes. In: Harris MI, Cowie CC, Stern MP, Boyko EJ, Reiber GE, Bennett PH, eds. Diabetes in America;2nd edition. Bethesda, MD: U.S. Department of Health and Human Services, 1995;429-48.

Winkleby MA, Robinson TN, Sundquist J, Kraemer HC. Ethnic variation in cardiovascular disease risk factors among children and young adults: findings from the Third National Health and Nutrition Examination Survey, 1988–1994. *JAMA* 1999;281:1006-13.

Wolf PA, D'Agostino RB, Kannel WB, Bonita R, Belanger AJ. Cigarette smoking as a risk factor for stroke: the Framingham Study. *JAMA* 1988;259:1025-9.

Wolk A, Bergstrom R, Hunter D, Willett W, Ljung H, Holmberg L, Bergkvist, Bruce A, Adami HO. A prospective study of association of monounsaturated fat and other types of fat with risk of breast cancer. *Arch Intern Med* 1998;158(1):41-5.

Women's Health Initiative Study Group. Design of the Women's Health Initiative clinical trial and observational study. *Control Clin Trials* 1998;19:61-109.

Wong ND, Hsu JC, Detrano RC, Diamond G, Eisenberg H, Gardin JM. Coronary artery calcium evaluation by electron beam computed tomography and its relation to new cardiovascular events. *Am J Cardiol* 2000;86:495-8.

Wong ND, Wilson PWF, Kannel WB. Serum cholesterol as a prognostic factor after myocardial infarction: the Framingham Study. *Ann Intern Med* 1991;115:687-93.

Wood D, De Backer G, Faergeman O, Graham I, Mancia G, Pyörälä K. Prevention of coronary heart disease in clinical practice: recommendations of the Second Joint Task Force of European and other Societies on Coronary Prevention. *Atherosclerosis* 1998;140:199-270.

Wood R, Kubena K, O'Brien B, Tseng S, Martin G. Effect of butter, mono-and polyunsaturated fatty acid-enriched butter, trans fatty acid margarine, and zero trans fatty acid margarine on serum lipids and lipoproteins in healthy men. *J Lipid Res* 1993a;34:1-11.

Wood R, Kubena K, Tseng S, Martin G, Crook R. Effect of palm oil, margarine, butter, and sunflower oil on the serum lipids and lipoproteins of normocholesterolemic middle-aged men. *J Nutr Biochem* 1993b;4:286-97.

Woolf SH. The need for perspective in evidence-based medicine. *JAMA* 1999;282:2358-65.

Working Group on Management of Patients with Hypertension and High Blood Cholesterol. National Education Programs Working Group report on the management of hypertension and high blood cholesterol. *Ann Intern Med* 1991;114:224-37.

Working Group Report on Management of Patients with Hypertension and High Blood Cholesterol. NIH Pub. No. 90-2361. Bethesda, MD: National Heart, Lung and Blood Institute, 1990:30 pages.

Wright JC, Weinstein MC. Gains in life expectancy from medical interventions—standardizing data on outcomes. *N Engl J Med* 1998;339:380-6.

Yeshurun D, Abukarshin R, Elias N, Lanir A, Naschitz JE. Treatment of severe, resistant familial combined hyperlipidemia with a bezafibrate-lovastatin combination. *Clin Ther* 1993;15:355-63.

Yusuf S, Wittes J, Probstfield J, Tyroler HA. Analysis and interpretation of treatment effects in subgroups of patients in randomized clinical trials. *JAMA* 1991;1266:93-8.

Zambon D, Ros E, Rodriquez-Villar C, Laguna JC, Vazquez M, Sanllehy C, Casals E, Sol JM, Hernandez G. Randomized crossover study of gemfibrozil versus lovastatin in familial combined hyperlipidemia: Additive effects of combination treatment on lipid regulation. *Metabolism* 1999;48:47-54.

Zema MJ. Gemfibrozil, nicotinic acid and combination therapy in patients with isolated hypoalphalipoproteinemia: a randomized, open-label, crossover study. *J Am Coll Cardiol* 2000;35:640-6.

Ziegler RG, Hoover RN, Pike MC, Hildesheim A, Nomura AM, West DW, Wu-Williams AH, Kolonel LN, Horn-Ross PL, Rosenthal JF. Migration patterns and breast cancer risk in Asian-American women. *J Natl Cancer Inst* 1993:85(22):1819-27.

Zilleruelo G, Hsia SL, Freundlich M, Gorman HM, Strauss J. Persistence of serum lipid abnormalities in children with idiopathic nephrotic syndrome. *J Pediatr* 1984;104:61-4.

Zimetbaum P, Frishman WH, Ooi WL, Derman MP, Aronson M, Gidez LI, Elder HA. Plasma lipids and lipoproteins and the incidence of cardiovascular disease in the very elderly. The Bronx aging study. *Arterioscler Thromb* 1992;12:416-23.

Zimmet P, Boyko EJ, Collier GR, de Courten M. Etiology of the metabolic syndrome: potential role of insulin resistance, leptin resistance, and other players. *Ann N Y Acad Sci* 1999;892:25-44.

Zock PL, Katan MB, Mensink RP. Trans-fatty acids and lipoproteins cholesterol. *Am J Clin Nutr* 1995;61:617.

Zock PL, Katan MB. Hydrogenation alternatives: effects of trans-fatty acids and stearic acid versus linoleic acid on serum lipids and lipoproteins in humans. *J Lipid Res* 1992;33:399-410.